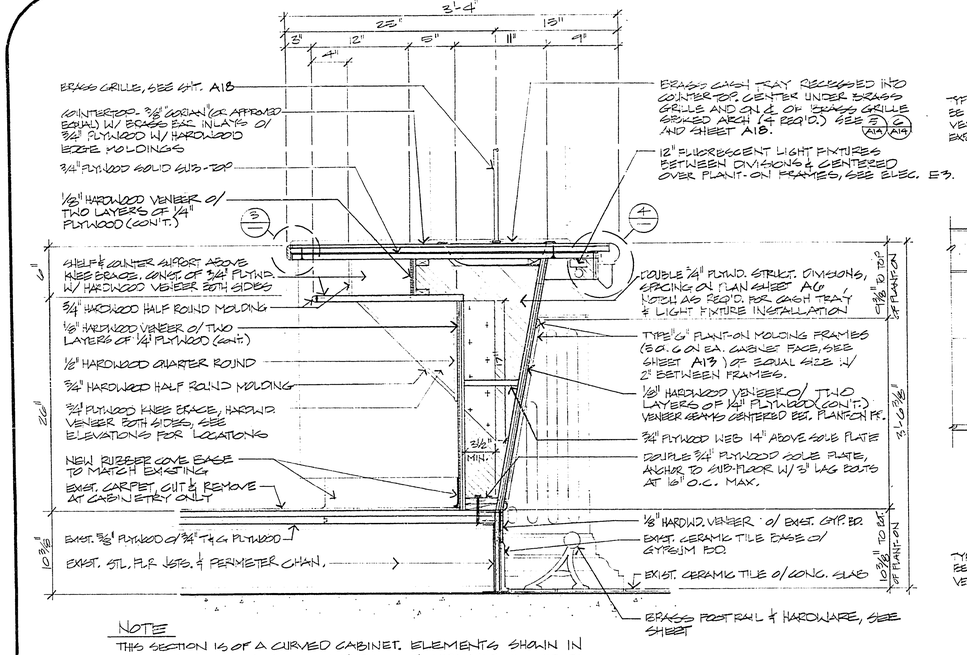

NOTE

THIS SECTION IS OF A CURVED CABINET. ELEMENTS SHOWN IN ELEVATION ARE DRAWN TO SHOW RELATIONSHIPS WITH ELEMENTS IN SECTION AND ARE NOT TRUE ELEVATION VIEWS.

CABINET SECTION 1
1½" = 1'-0"

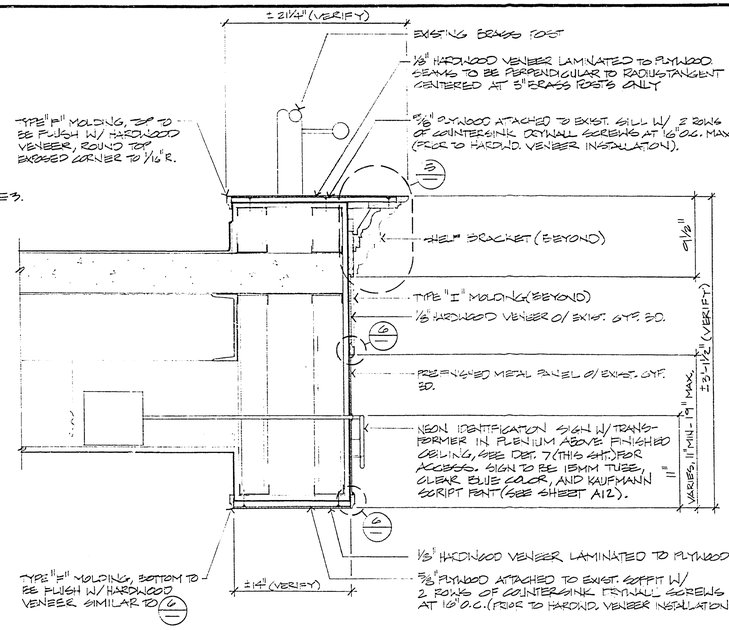

SOFFIT MILLWORK SECTION 2
1½" = 1'-0"

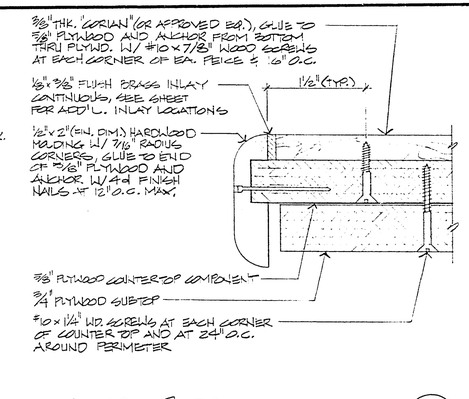

COUNTERTOP DETAIL 3
FULL SCALE

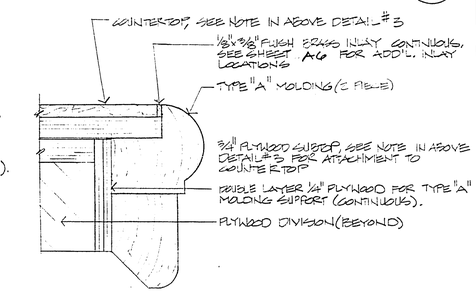

COUNTERTOP DETAIL 4
½" = 1"

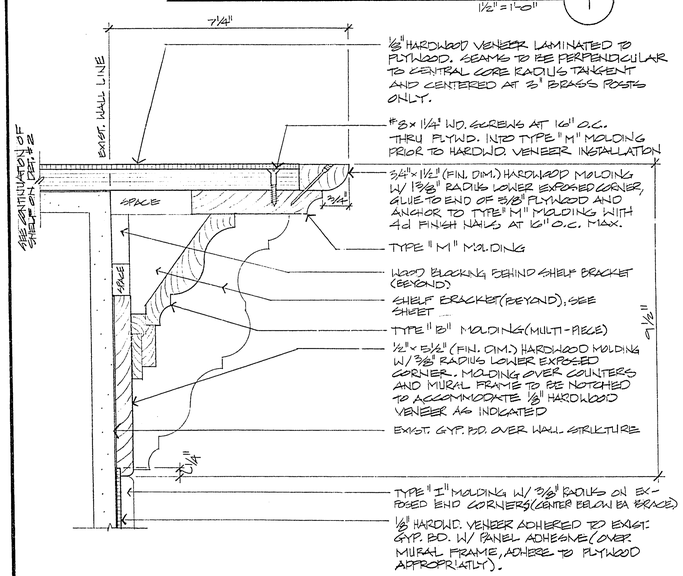

SHELF/CORNICE DETAIL
AROUND CENTRAL CORE
½" = 1" 5

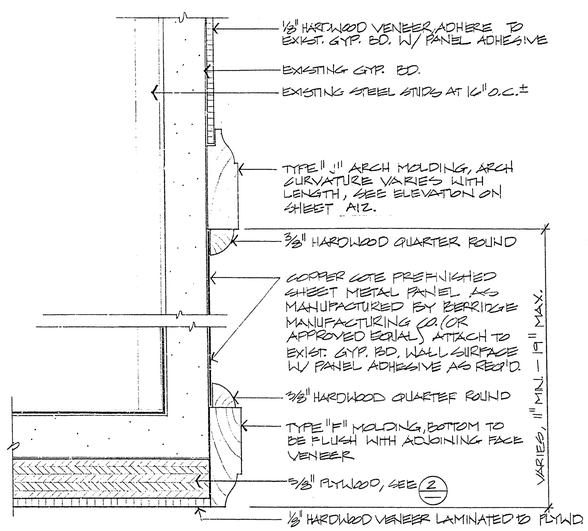

MILLWORK SECTION 6
FULL SCALE

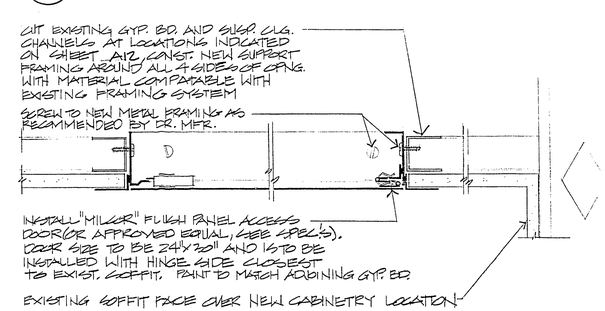

FLUSH PANEL ACCESS DOOR DETAIL
SIMILAR INSTALLATION FOR WALL LOCATIONS
½" = 1" 7

GENERAL NOTE

FOR HARDWOOD AND FINISH DESCRIPTION, SEE SPECIFICATIONS. FOR ILLUSTRATION OF MOLDING "TYPES", SEE SHEET A13.

ALL DETAILS THIS SHEET
HIGH PRIORITY
AS APPLICABLE

CITY OF LAS VEGAS NEVADA

City of Las Vegas, Nevada
Department of Design and Development
Thomas B. Graham, AICP, RLA, Director

SCALE: AS SHOWN
DATE: 1/87
DESIGN BY:
DRAWN BY:
DATE
REVISIONS

CHARLES SCALISER REGISTERED ARCHITECT No. 1709 Jan 30, 1987 ARCHITECT STATE OF NEVADA

DOWNTOWN TRANSPORTATION CENTER AMENITIES

Central Core Counter & Millwork Details

PROJECT NO. WU9040
DRAWING NO. 590-2F
SHEET 17 OF 41
A17

30-43-01