23-4-82

BENCH MARK

NORTH RIM OF SEWER MANHOLE LOCATED AT THE SW COR OF PROPERTY
U.S.C.&G.S. DATUM ELEV. 1761.97

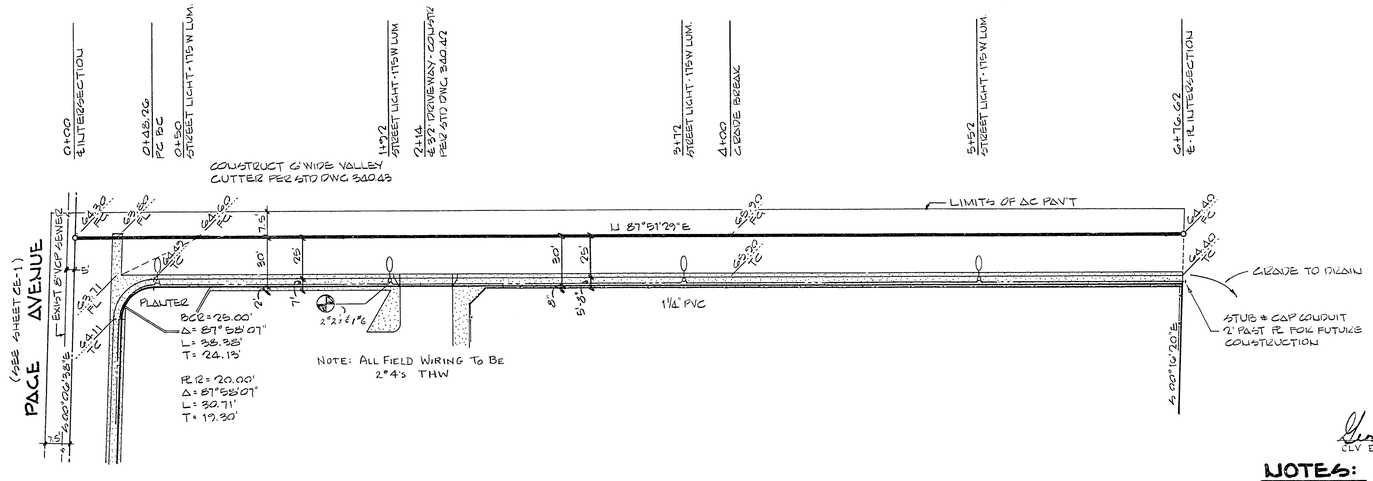

HALF STREET SECTION

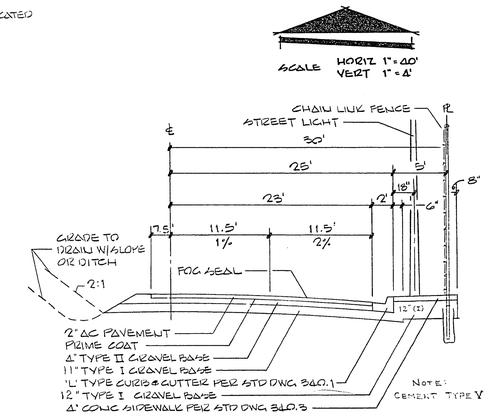

~~MESQUITE AVE.~~ PACE AVE.

DIAMOND HEAD DR.

NOTES:

1. ALL CONSTRUCTION SHALL CONFORM TO THE LATEST REVISED UNIFORM STANDARD DRAWINGS & SPECIFICATIONS FOR PUBLIC WORKS CONSTR. FOR CLARK COUNTY AREA.
2. STREET LIGHTING SPECIFICATIONS 240 VOLT SINGLE PHASE TWO WIRE SYSTEM DATED 9-1-71 TO APPLY.

APPROVALS

CLV ELECTRICAL SUPT.	5-4-76 DATE
CLV ELECTRICAL COORDINATOR	6-8-76 DATE
CITY OF LAS VEGAS - CITY ENGINEER	7/7/76 DATE
CITY OF LAS VEGAS - FIELD ENGINEER	7-1-76 DATE
NEVADA POWER COMPANY	DATE

D I A M O N D H E A D D R.

~~M E S Q U I T E A V E N U E~~

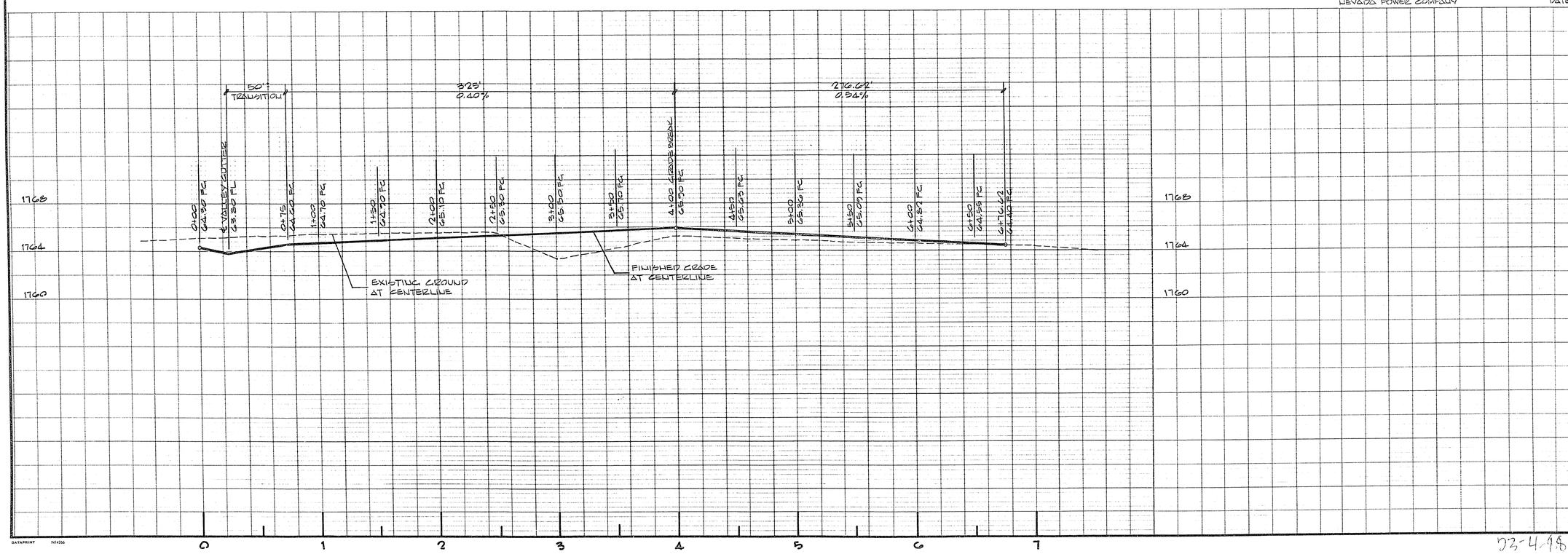

DATE	NO	REVISIONS	APP'D
6/8/76	1	INCORPORATE OVERTAKE TO 175 PER C.L.V.	

PREPARED FOR: WELLES, TATE & KENNEDY ARCHITECTS, AIA

DATE MAR 1976 DESIGN ANM DRAWN EJB CHECK SCALE AS NOTED

BAUGHMAN, HAUGHT & TURNER
CIVIL ENGINEERS MINING ENGINEERS
LAND SURVEYORS
2325 WEST CHARLESTON BOULEVARD LAS VEGAS, NEVADA 89102
702 - 870-8771

STREET & STREET LIGHT DESIGN

SECTION 32, TOWNSHIP 20 SOUTH, RANGE 62 EAST, M.D.B.&M.
CITY OF LAS VEGAS
NEVADA

SHEET 1 OF 2

PROJ. Nº FB 104 P&17

DATAPRINT N14266

23-4-98 107-V970