23-4-81

NOTES:

1. ALL CONSTRUCTION SHALL CONFORM TO THE LATEST REVISED UNIFORM STANDARD DRAWINGS & SPECIFICATIONS FOR PUBLIC WORKS CONSTR. FOR CLARK COUNTY AREA.
2. SEE SITE PLAN FOR REMOVAL OF EXIST HOUSE AND TREES.

BENCH MARK

NORTH RIM OF SEWER MANHOLE LOCATED AT THE SW COR. OF PROPERTY. USC & GS DATUM.

ELEVATION 1761.97

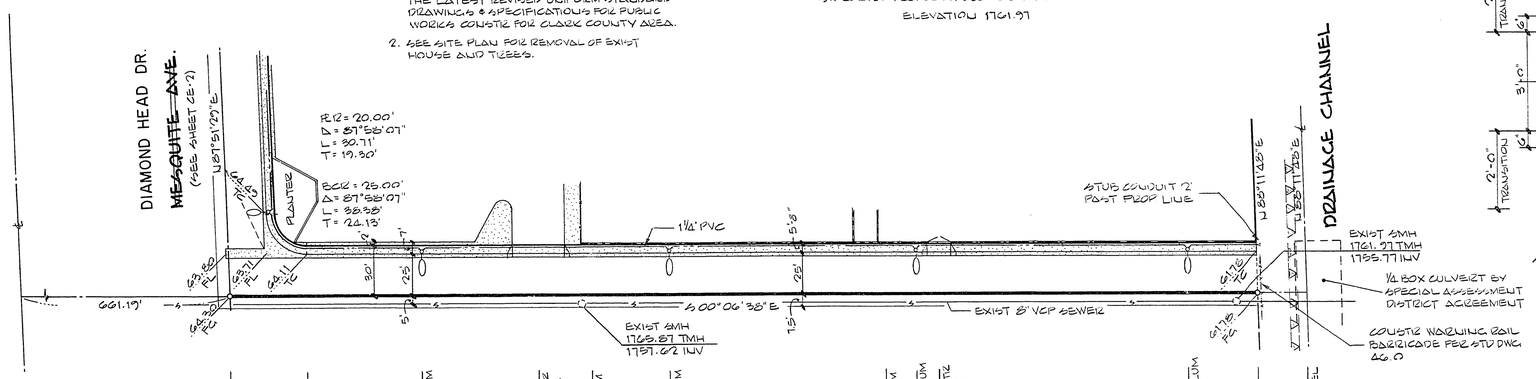

0+00 ℄ INTERSECTION
0+28.26 PC P.C.
1+20 STREET LIGHT - 175 W LUM
1+20 ±32' DRIVEWAY - COUSTR PER STD DWG. SAO.A2
2+72 STREET LIGHT - 175 W LUM
2+70 STREET LIGHT - 175 W LUM
4+02 STREET LIGHT - 175 W LUM
4+20 STREET LIGHT - 175 W LUM
4+35 ℄ 16' DRIVEWAY - COUSTR PER STD DWG SAO.A2
5+85 STREET LIGHT - 175 W LUM
6+31.18 16'-℄ INTERSECTION
6+61.19 ℄ DRAINAGE CHANNEL

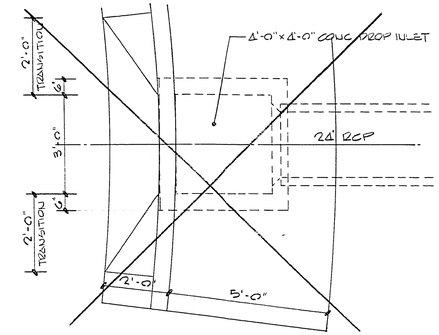

DETAIL 1

SCALE 1" = 2'-0"

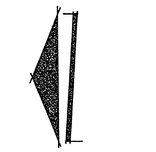

SCALE HORIZ 1" = 40'
VERT 1" = 4'

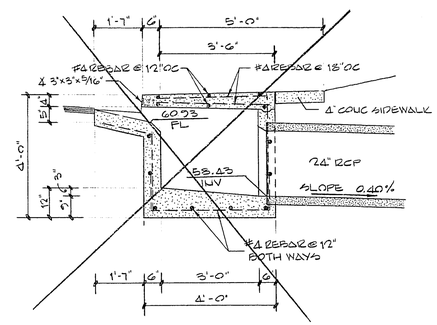

SECTION A

SCALE 1" = 2'-0"

PACE AVENUE

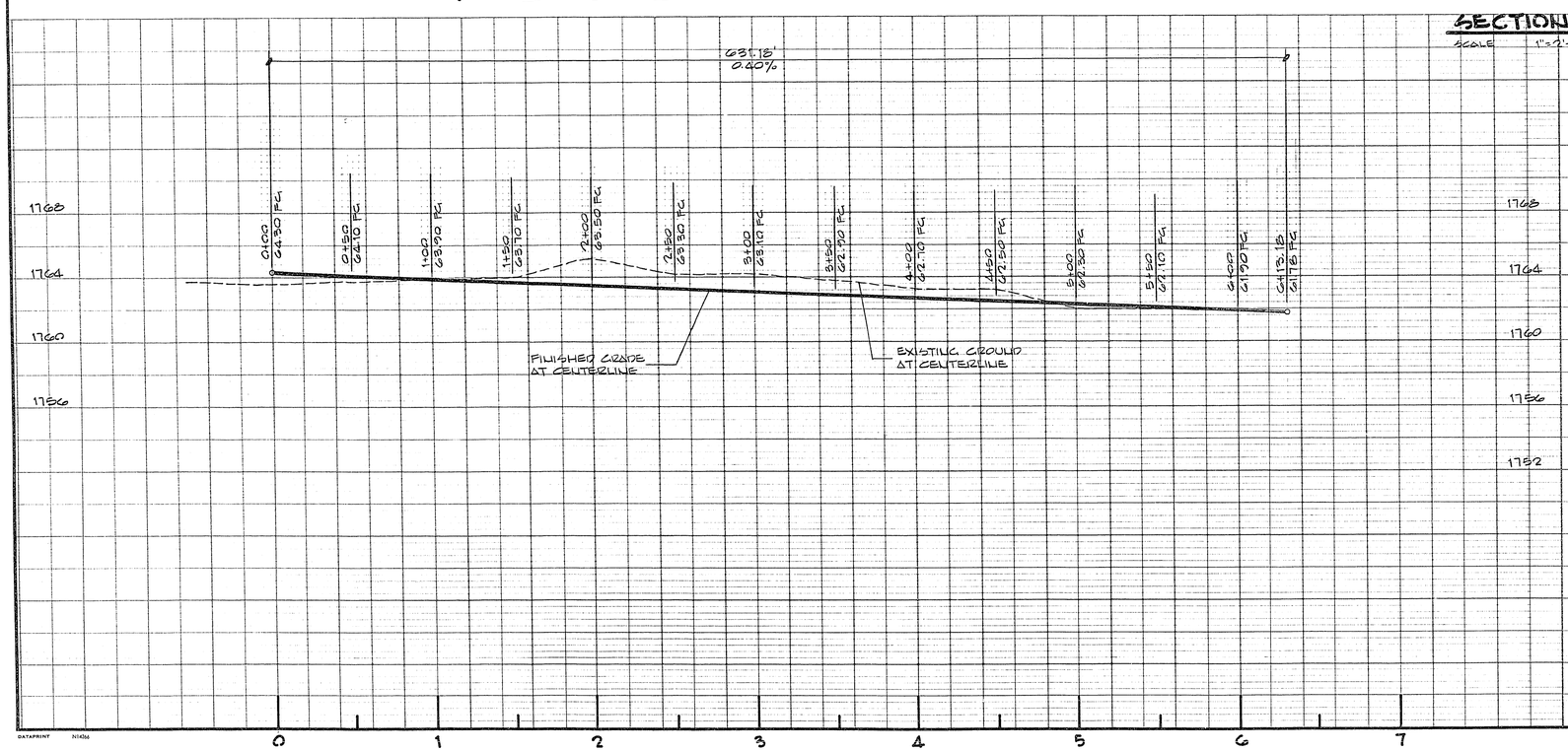

Gary Ferris 5-4-76
CLV ELECTRICAL SUP'T. DATE

Rob Forster 5-3-76
CLV ELECTRICAL COORDINATOR DATE

APPROVALS

Bruce Hampton 1/1/76
CITY OF LAS VEGAS CITY ENGINEER DATE

CITY OF LAS VEGAS FIELD ENGINEER DATE

NEVADA POWER COMPANY DATE

DATE NO	REVISIONS	APP'D
1	5/3/76	PLOT PLAN, STREET LIGHTS, CONC. SIDEWALK, STREETS AND INTERSECTIONS, OVERFLOW TO 1-D PER C.L.V.

PREPARED FOR:
WELLES, TATE & KELLEDY ARCHITECTS, AIA

DATE MAR 1976
DESIGN
DRAWN A.W.M.
CHECK R.J.B.
SCALE AS NOTED

BAUGHMAN, HAUGHT & TURNER
CIVIL ENGINEERS MINING ENGINEERS
LAND SURVEYORS
2325 WEST CHARLESTON BOULEVARD LAS VEGAS, NEVADA 89102
702 - 870-8771

STREET & STREET LIGHT DESIGN
PACE AVENUE
SECTION 32, TOWNSHIP 20 SOUTH, RANGE 62 EAST M.D.B.
CITY OF LAS VEGAS NEVADA

SHEET 1 OF 1

PROJ. Nº FS 104 P 49

DATAPRINT N14264

23-4-87 107-1970