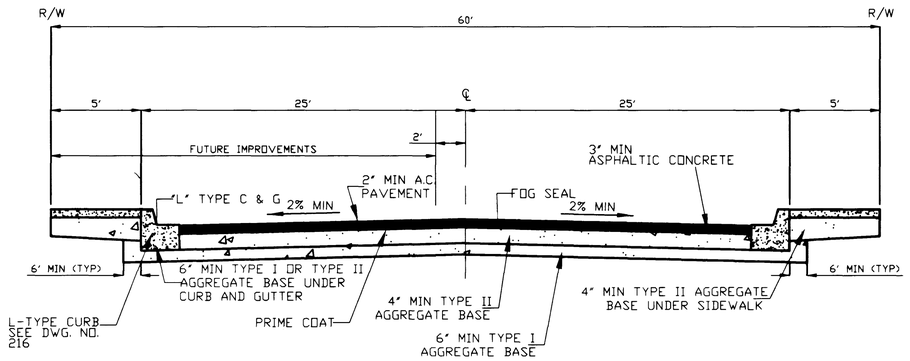

STREET SECTION

FAIRHAVEN STREET

EXISTING IMPROVEMENTS

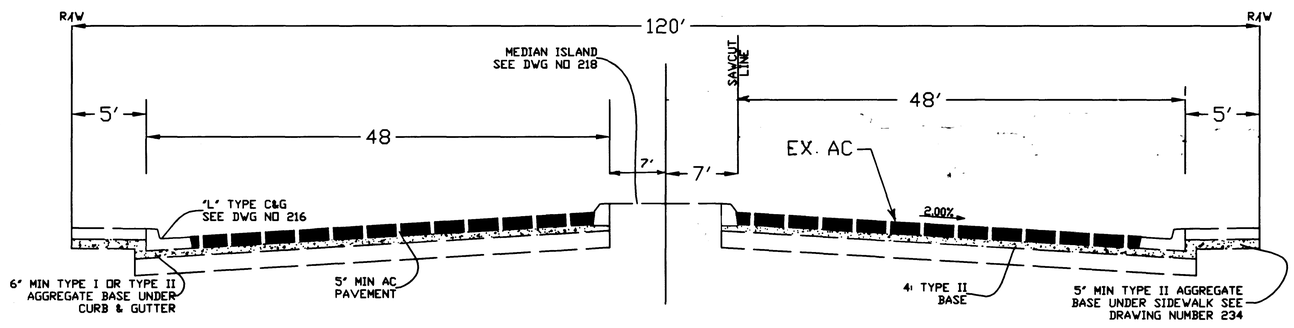

TYPICAL SECTION

DECATUR BOULEVARD

REV	DATE	BY	REVISION

MEL W. TAYLOR
2601 McLEOD
LAS VEGAS, NEVADA 89121
(702) 431-3804 / FAX (702)431-3834

AZIMUTH ENGINEERING & SURVETING INC.
16 WEST PACIFIC #11
HENDERSON, NEVADA 89015
(702) 564-8544 / FAX (702) 564-7564

SHEET
TYPICAL STREET SECTION
FAIRHAVEN

TITLE
DECATUR AUTO CENTER
DECATUR BLVD.
NORTH OF VEGAS DRIVE.

DRAWN BY: D.S. BLUMSLEY 06/01/98
DESIGNED BY: G.H. BLUMSLEY 06/04/98
CHECKED BY: G.H. BLUMSLEY 06/01/98
PROJECT NO. 98004-01
SCALE: NONE

GEOFFREY H. BLUMSLEY
8/25/98

SHEET
S2
8 OF 9 SHEETS

DRAWING NO.
107-V2941

14 DD

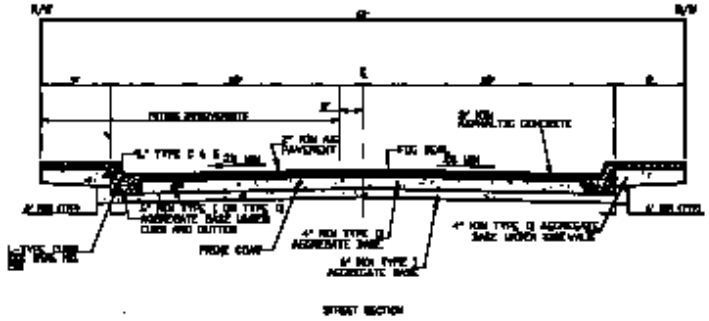

FAIRHAVEN STREET

EXISTING IMPROVEMENTS

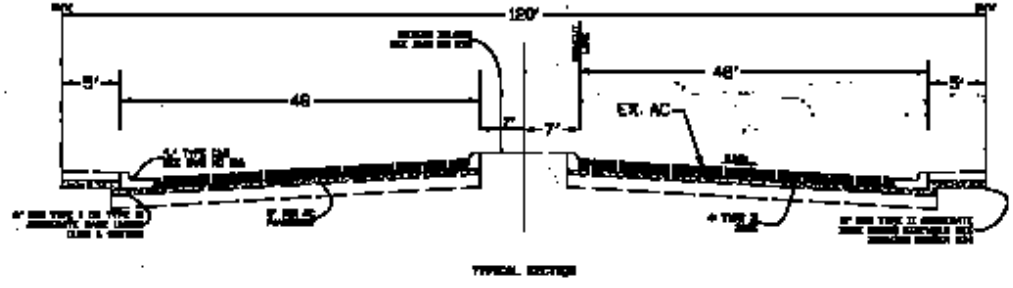

DECATUR BOULEVARD

TYPICAL STREET SECTION
FAIRHAVEN

DECATUR AUTO CENTER
DECATUR BLVD.
NORTH OF VEGAS DRIVE

107-V2941