EQUIPMENT SCHEDULE

FIXTURE	MINIMUM BRANCH SIZE					MANUFACTURER & MODEL NO. REMARKS:
	CW	HW	SOIL	VENT	TRAP ARM	
LAV-1 LAVATORY	½"	½"	2"	1½"	2"	ACORN DURA WARE #953-1-DMS-GT-TT OR EQUAL. WALL HUNG 18" LAVATORY WITH AIRTROL PUSH BUTTON PNUEMATIC OPERATED VALVEHEAVY GA TYPE 304 STAINLESS STEEL CONSTRUCTION.
LAV-2 LAVATORY (HANDICAPPED)	½"	½"	2"	1½"	2"	ACORN DURA WARE #953-1-CGS-GE OR EQUAL. WALL HUNG 18" LAVATORY WITH AIRTROL PUSH BUTTON PNUEMATIC OPERATED VALVE HEAVY GA TYPE 304 STAINLESS STEEL CONSTRUCTION.
WC-1 WATER CLOSET (HANDICAPPED)	1¼"	--	4"	2	3"	ACORN DURA WARE #2100-W-1-CN-HS OR EQUAL WALL HUNG BLOW OUT JET TOILET WITH MODULAR VALVE CONTROLLER, PUSH BUTTON & HINGED SEAT HEAVY GA TYP 304 STAINLESS STEEL CONTRUCTION.
WC-2 WATER CLOSET	1¼"	--	4"	2	3"	ACORN DURA WARE #2100-W-1-CN-HS OR EQUAL WALL HUNG BLOW OUT JET TOILET WITH MODULAR VALVE CONTROLLER, PUSH BUTTON & HINGED SEAT, HEAVY GA TYP 304 STAINLESS STEEL CONTRUCTION.
UR-1 URINAL (HANDICAPPED)	1"	--	2"	1½"	2"	ACORN DURA WARE # 2167-W-FV-2898 OR EQUAL. WALL HUNG STRADLE TYPE URINAL WITH MVC MODULAR VALVE CONTROLLER, PUSH BUTTON & HINGED SEAT HEAVY GA TYP 304 STAINLESS STEEL CONTRUCTION.
MS-1 MOP SINK	¾"	¾"	3"	2"	2"	AMERICAN STANDARD LAKEWELL SERVICE SINK #7692 OR EQUAL. FAUCET #8340.242 WITH VACUUM BREAKER AND ROUGH CHROME FINISH. TRAP STANDARD #1798.176 WITH STRAINER 22" x 18" SERVICE SINK.
EWH ELECTRIC WATER HEATER	1"	1"	¾"	--	--	STATE INDUSTRIES #SBC-52-9-IFE-N6F OR EQUAL COMMERCIAL TYPE 52 GALS. ELECTRIC WATER HEATER, 73 GA. @ 120°F 9KW, 208V, 3PH, 60 HZ.
KS-1 KITCHEN SINK	¾"	¾"	3"	--	2"	TABCO #T59205 OR EQUAL. FAUCET: CHICAGO # 540-LD-L12 W/ 12" SWING AND SPRAY AERATOR. 18" X 24" 3-COMPARTMENT SINK WITH DRAIN BOARD HEAVY GA. TYPE 304 STAINLESS STEEL CONSTRUCTION
FD-1 FLOOR DRAIN	--	--	3"	2"	3"	JAY R. SMITH MODEL # 2005AU WITH STRAINER, VANDAL PROOF SCREWS, P-TRAP ANDTRAP PRIMER.
HS-1 HAND SINK	½"	½"	1½"	1½"	2"	ADVANCE TABCO 7-PS-22 FAUCET: MOEN #8722 WALL HUNG STAINLESS STEEL SINK BY WITH DECK MOUNTED CENTER SET FAUCET
DF-1 DRINKING FOUNTIAN	½"		2"	1½"	2"	WALL HUNG HANDICAPPED DRINKING FOUNTAIN BY MDF MODEL #450
HB-1 HOSE BIBB	½"	--	--	--	--	HOSE BIBB WITH INTERGAL VACUUM BREAKER BY JAY R. SMITH 5609 QT OR EQUAL.
FS-1 FLOOR SINK	--	--	3"	2"	3"	FLOOR SINK BY JAY R. SMITH 3002NB OR EQUAL 12½" NICKEL -BRONZE TOP WITH DOME STRAINER.
TP-1 TRAP PRIMER	¾"	---	---	--	--	REFER TO DETAIL 1/P0.
ET-1 EXPANSION TANK	--	---	---	--	--	RHEEM RRT-12 4.4
SA-1 SHOCK ARRESTOR	--	--	--	--	--	JAY R. SMITH MODEL #5010
GT-1 GREASE TRAP	--	--	4"	2"	--	JAY R. SMITH MODEL #3350

13202

SHEET INDEX

SHEET No.	DESCRIPTION
P0	PLUMBING LEGEND AND SCHEDULES
P.1	PLUMBING WASTE PLAN AND ISOMETRIC
P.2	PLUMBING WATER PLAN AND ISOMETRIC

PLUMBING DETAILS

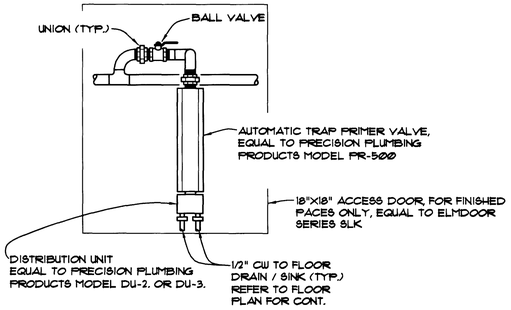

TRAP PRIMER CONNECTION DETAIL (1 / P00)

NO SCALE

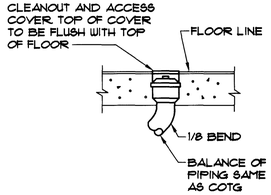

FLOOR CLEANOUT (FCO)

CLEANOUT NOT TO BE LOCATED IN A CARPETED AREA

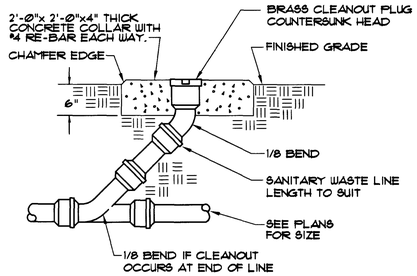

GRADE CLEANOUT (GCO)

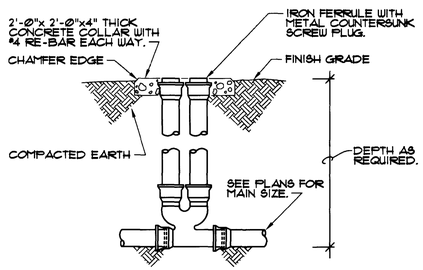

TWO-WAY GRADE CLEANOUT

CLEANOUT DETAILS (2 / P0)

NO SCALE

PLUMBING LEGEND

SYMBOL	ABBREVIATION	DESCRIPTION
—G—	G	NATURAL GAS
—CD—	CD	CONDENSATE DRAIN
	CW	COLD WATER
	HW	HOT WATER
- - - - - -	V	VENT
	W	SANITARY WASTE
		RELIEF VALVE
		PIPE TURNED DOWN
		PIPE TURNED UP
		TEE TURNED DOWN
		TEE TURNED UP
		UNION
		FLANGE
		PIPE CAP
	HB	HOSE BIBB
		VALVE IN RISER
		ANCHOR
	GV	GATE VALVE
	GLV	GLOBE VALVE
	BFV	BUTTERFLY VALVE
	BV	BALL VALVE
	PV	PLUG VALVE
	PRV	PRESSURE REDUCING VALVE
	CHV	CHECK VALVE
	CD	CONDENSATE DRAIN
	DF	DRINKING FOUNTIAN
	ET	EXPANSION TANK
	EWH	ELECTRIC WATER HEATER
	FD	FLOOR DRAIN
	FS	FLOOR SINK
	GA	GUAGE
	HB	HOSE BIBB
	HS	HAND SINK
	EWH	ELECTRIC WATER HEATER
	HS	HAND SINK
	LAV	LAVATORY
	MS	MOP SINK
	OD	OVERFLOW DRAIN
	POC	POINT OF CONNECTION
	RD	ROOF DRAIN
	SA	SHOCK ARRESTOR
	SOV	SHUT OFF VALVE
	S	SINK
	SS	STAINLESS STEEL
	T&P	TEMPERATURE & PRESSURE
	TP	TRAP PRIMER
	UR	URINAL
	TP	TRAP PRIMER
	UR	URINAL

PROFESSIONAL ENGINEER - STATE OF NEVADA
PAUL RICHARD MECHANICAL
No. 10081
8-17-98

675-V35

SYSKA HENNESSY
Mechanical / Electrical Engineers
3120 Rainbow Blvd., Suite 202, Las Vegas, Nevada 89146
Telephone: (702) 873-0670 Fax: (702) 873-1099

CITY OF LAS VEGAS NEVADA

REVISIONS

CONSULTANT

CELLA BARR ASSOCIATES
Landscape Architecture Engineering Planning Surveying Hydrology
1771 E. Flamingo Road #103-B Las Vegas, Nevada 89119 (702)893-7779
Offices in Arizona, California and Nevada

ELKHORN AND DURANGO BALLFIELD COMPLEX

PLUMBING LEGEND & SCHEDULES

DEPARTMENT OF PUBLIC WORKS
ARCHITECTURAL SERVICES
400 EAST STEWART AVENUE
LAS VEGAS, NEVADA 89101
PHONE: (702) 229-6335
FAX: (702) 382-3232
TDD: (702) 386-9108

ARCHITECT
RICHARD DANIELSON

DRAWN	MPP
FILE	P0
DATE	JULY 1998
SCALE	1/4" = 1'-0"
PROJECT	ELKHORN AND DURANGO BALLFIELD COMPLEX
SHT NO	P-0
65048	SHEET 41 OF 54

PUBLISHED AS INSTRUMENTS OF SERVICE ARE THE PROPERTY OF THE CITY OF LAS VEGAS, PROFESSIONALS, WHOSE SEAL IS AFFIXED HEREON, AND ARE NOT TO BE USED FOR ANY PURPOSE OTHER THAN THE PROJECT FOR WHICH THEY WERE PREPARED AND NOT FOR THE CONSTRUCTION OF ANY OTHER PROJECT. R.L.C. 03/97

EQUIPMENT SCHEDULE

Number	[illegible]	[illegible]	[illegible]	[illegible]	[illegible]	[illegible]
[illegible]	[illegible]	[illegible]	[illegible]	[illegible]	[illegible]	[illegible]
[illegible]	[illegible]	[illegible]	[illegible]	[illegible]	[illegible]	[illegible]
[illegible]	[illegible]	—	[illegible]	[illegible]	[illegible]	[illegible]
[illegible]	[illegible]	—	[illegible]	[illegible]	[illegible]	[illegible]
[illegible]	[illegible]	—	[illegible]	[illegible]	[illegible]	[illegible]
[illegible]	[illegible]	[illegible]	[illegible]	[illegible]	[illegible]	[illegible]
[illegible]	[illegible]	[illegible]	[illegible]	—	—	[illegible]
[illegible]	[illegible]	[illegible]	[illegible]	—	[illegible]	[illegible]
[illegible]	—	—	[illegible]	[illegible]	[illegible]	[illegible]
[illegible]	[illegible]	[illegible]	[illegible]	[illegible]	[illegible]	[illegible]
[illegible]	[illegible]		[illegible]	[illegible]	[illegible]	[illegible]
[illegible]	[illegible]	—	—	—	—	—
[illegible]	—	—	[illegible]	[illegible]	[illegible]	[illegible]
[illegible]	[illegible]	—	—	—	—	—
[illegible]	—	—	—	—	—	—
[illegible]	—	—	[illegible]	[illegible]	—	[illegible]

/9202

SHEET INDEX

SHEET No.	DESCRIPTION
[illegible]	[illegible]
[illegible]	[illegible]
[illegible]	[illegible]

PLUMBING DETAILS

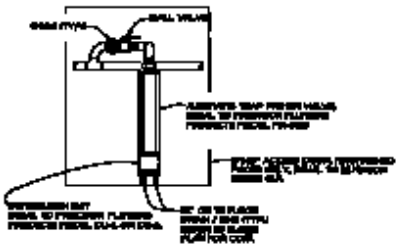

TRAP PRIMER CONNECTION DETAIL (1)

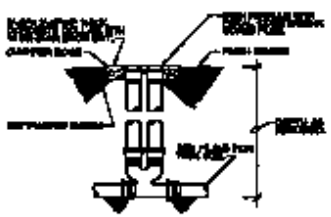

CLEANOUT DETAILS (2)

PLUMBING LEGEND

SYMBOL	ABBREVIATION	DESCRIPTION
[illegible]	[illegible]	[illegible]
[illegible]	[illegible]	[illegible]
[illegible]	[illegible]	[illegible]
[illegible]	[illegible]	[illegible]
[illegible]	[illegible]	[illegible]
[illegible]	[illegible]	[illegible]
[illegible]		[illegible]
[illegible]		[illegible]
[illegible]		[illegible]
[illegible]		[illegible]
[illegible]		[illegible]
[illegible]		[illegible]
[illegible]		[illegible]
[illegible]		[illegible]
[illegible]		[illegible]
[illegible]		[illegible]
[illegible]	[illegible]	[illegible]
[illegible]	[illegible]	[illegible]
[illegible]	[illegible]	[illegible]
[illegible]	[illegible]	[illegible]
[illegible]	[illegible]