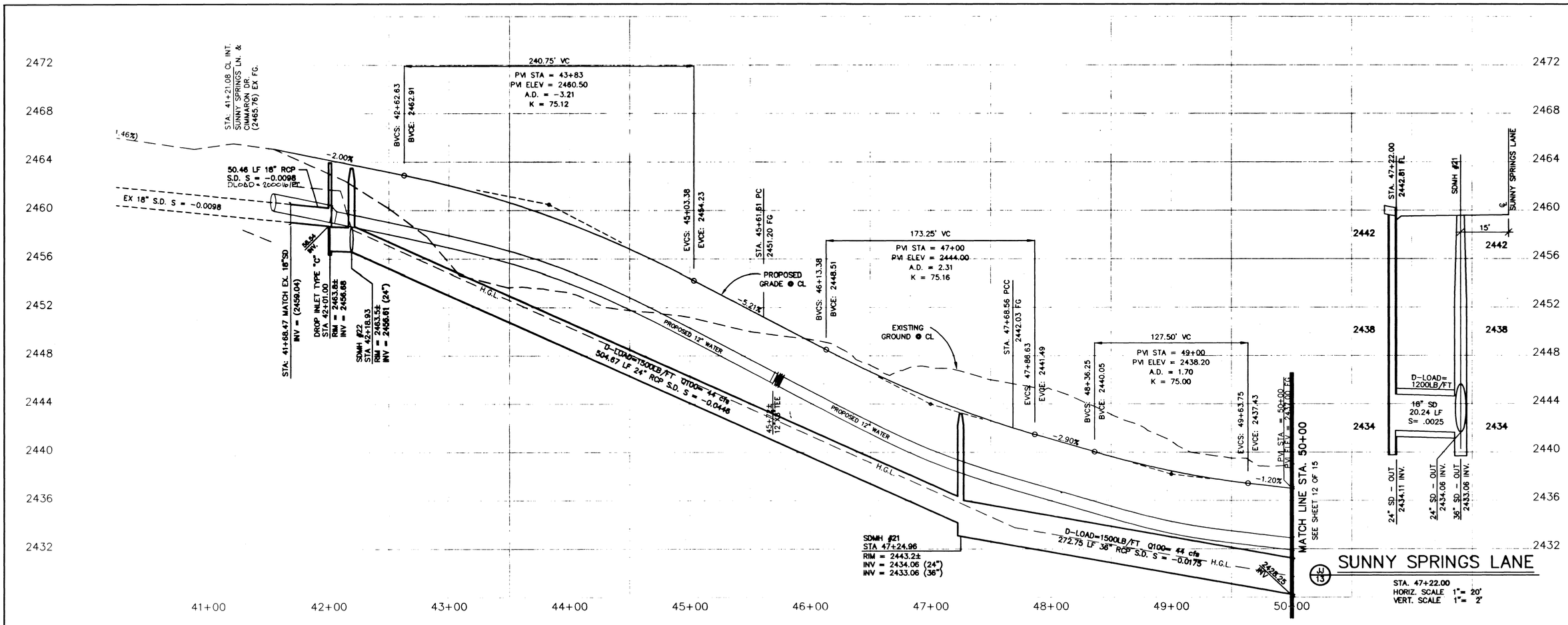

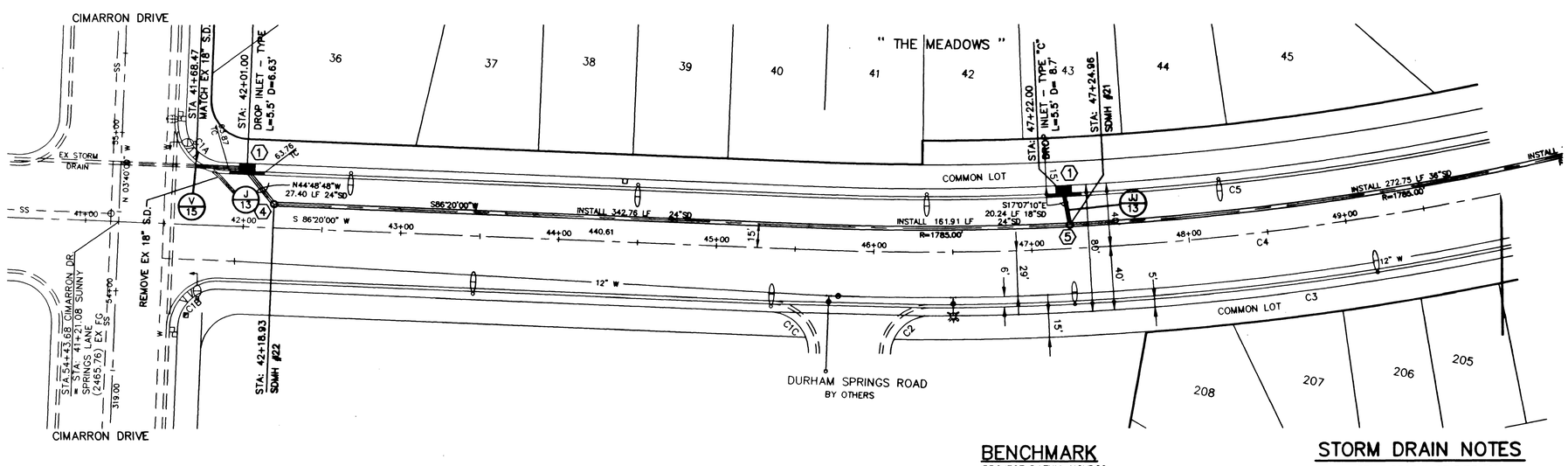

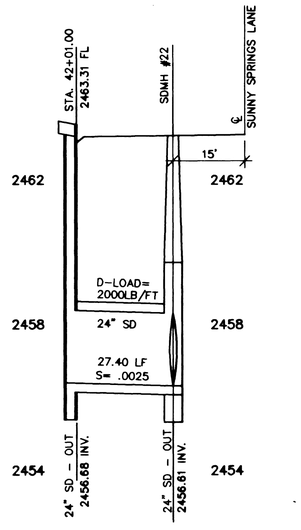

NOTICE TO CONTRACTOR !

EXISTING UTILITY LOCATIONS SHOWN HEREON ARE APROXIMATE ONLY. IT SHALL BE THE CONTRACTOR'S RESPONSIBILITY TO DETERMINE THE EXACT VERTICAL AND HORIZONTAL LOCATION OF ALL EXISTING UNDERGROUND UTILITIES PRIOR TO COMMENCING CONSTRUCTION. NO REPRESENTATION IS MADE THAT ALL EXISTING UTILITIES ARE SHOWN HEREON. THE ENGINEER ASSUMES NO RESPONSIBILITY FOR UTILITIES NOT SHOWN OR UTILITIES NOT SHOWN IN THEIR PROPER LOCATION.

AVOID CUTTING UNDERGROUND UTILITIES. IT'S COSTLY.
CALL before you Dig
1-800-227-2600
UNDERGROUND SERVICE (USA)

GRAPHIC SCALE
40 0 20 40 80 160
(IN FEET)
1 inch = 40 ft.

SUNNNY SPRINGS LANE

CENTERLINE & BACK OF CURB CURVE TABLE

CURVE	RADIUS	DELTA	TANGENT	LENGTH
C1A	30.00'	90°00'00"	30.00'	47.12'
C1B	30.00'	90°00'00"	30.00'	47.12'
C1C	30.00'	90°00'00"	30.00'	47.12'
C2	30.00'	87°39'01"	28.79'	45.89'
C3	1835.00'	15°52'07"	255.75'	508.22'
C4	1800.00'	18°13'04"	288.60'	572.33'
C5	1765.00'	16°44'31"	259.72'	515.74'

BENCHMARK

PROJECT DATUM=NGVD29
NO.14, STATION 1LV9021N6 3" BRASS CAP USC & GS BM #113 3/4 MILE NORTH OF 1LV9028NNE6, 50' (FT.) EAST OF OLD RAILROAD BED
ELEVATION = 2452.515

EQUATION ELEVATION = 2452.515 + 2.401' = 2454.916
(TO NAVD88) (747.5266m + 0.7318m = 748.2584m)

STORM DRAIN NOTES

1. INSTALL DROP INLET TYPE "C" PER STD DWG #413 & DETAILS THIS PROJECT
2. INSTALL TYPE III 60" DIA MANHOLE PER STD DWG #406
3. INSTALL TYPE I 48" DIA MANHOLE PER STD DWG #403
4. INSTALL TYPE I 60" DIA MANHOLE PER STD DWG #403
5. INSTALL TYPE II 60" DIA MANHOLE PER STD DWG #405
6. INSTALL CONCRETE ENCASEMENT PER CLARK COUNTY AREA STD DWG #505

NO.	DATE	BY	APPV'D	REVISION DESCRIPTION

PROFESSIONAL ENGINEER STATE OF NEVADA MARK E. JONES No. 6604 CIVIL
STAMP DATE 4/27/96

SOUTHWEST ENGINEERING
LAND PLANNING • MAPPING • DEVELOPMENT
5426 W. VEGAS DRIVE
LAS VEGAS, NEVADA 89108
(702) 648-9700

TITLE: STORM DRAIN PLAN & PROFILE
SUNNY SPRINGS LANE
PROJECT: ELKHORN SPRINGS - PHASE II
STORM DRAIN PLANS

WORK ORDER NO: 950925
DESIGN BY: M. JONES
DATE: 2/16/96
SCALE: 1" = 40'
CADFILE: SDIF-SUN.DWG
SHEET 13 OF 15 SHEETS

11-8-94 327Y-4299-2