CITY OF LAS VEGAS, NEVADA

APPROVED FOR CONSTRUCTION

THIS APPROVAL IS FOR WORK IN CITY OF LAS VEGAS ROW OR CITY OF LAS VEGAS EASEMENTS ONLY. OBTAINING PERMISSION OR EASEMENTS FOR WORK SHOWN ON PRIVATE PROPERTY IS THE RESPONSIBILITY OF THE UTILITY.

L19-01127 107V7896-FLB

APPROVAL: _____ DATE: 8/19

CONTACT INFORMATION

ENGINEER:	BLACK & VEATCH CORPORATION 8965 S EASTERN AVE, SUITE #325 LAS VEGAS, NV 89123
CONTACT:	JASON FRAYER (702) 460-8926

GENERAL NOTES

THE FACILITY IS UNMANNED AND NOT FOR HUMAN HABITATION. A TECHNICIAN WILL VISIT THE SITE AS REQUIRED FOR ROUTINE MAINTENANCE. THE PROJECT WILL NOT RESULT IN ANY SIGNIFICANT DISTURBANCE OR EFFECT ON DRAINAGE; NO SANITARY SEWER SERVICE, POTABLE WATER, OR TRASH DISPOSAL IS REQUIRED AND NO COMMERCIAL SIGNAGE IS PROPOSED.

PROJECT DESCRIPTION

AT&T WIRELESS PROPOSES A NEW WIRELESS INSTALLATION ON A LIGHT POLE. THE SCOPE WILL CONSIST OF THE FOLLOWING:

- INSTALL (1) CANISTER ANTENNA
- INSTALL (1) ANTENNA MOUNT
- INSTALL (3) RADIO UNITS
- INSTALL (2) CROSS BAND COMBINERS
- INSTALL (1) RF DISCONNECT
- ~~INSTALL (1) HAND HOLE~~
- INSTALL (1) PULLBOX

By Others: COX

PROJECT INFORMATION

PROPERTY OWNER:	CITY OF LAS VEGAS
SITE CONTACT:	NA
FA NUMBER	14825565
USID:	209934
PACE ID:	MRSDL024539
COUNTY:	CLARK
LATITUDE (NAD 83):	36 170015'
LONGITUDE (NAD 83):	-115.36256'
GROUND ELEVATION:	3380.78' A.M.S.L.
ANTENNA TIP HEIGHT:	33'-4" AGL
ZONING JURISDICTION.	CITY OF LAS VEGAS
ZONING DISTRICT:	CITY OF LAS VEGAS
PARCEL #:	13734517001
OCCUPANCY GROUP.	U
CONSTRUCTION TYPE:	I-B
POWER COMPANY:	NV ENERGY
RF ENGINEER:	BRIAN CRISS (702) 768-0163
LEASING AGENT:	JASON FRAYER (702) 460-8926
ZONING AGENT:	JASON FRAYER (702) 460-8926
CONSTRUCTION MANAGER:	SUMANTH CHEJARLA CHEJARLAS@BV.COM

at&t

CRAN_NVL08228F_R03

USID #: 209934
PICO SMALL CELL

ADJACENT TO
12126 ALTA DRIVE
LAS VEGAS, NV 89135

LOCATION MAPS

VICINITY MAP — NO SCALE

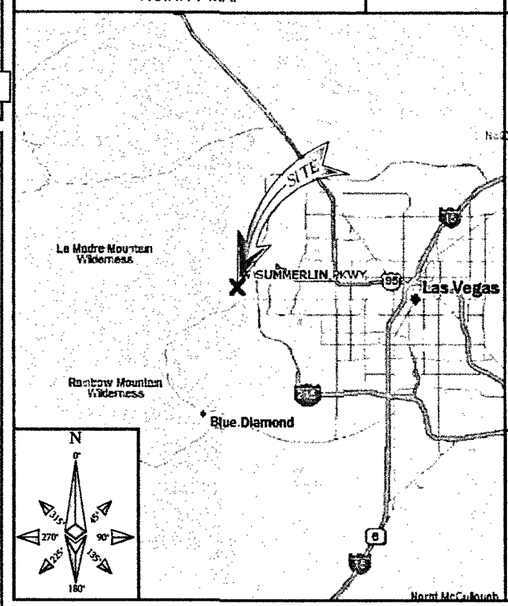

LOCAL MAP — NO SCALE

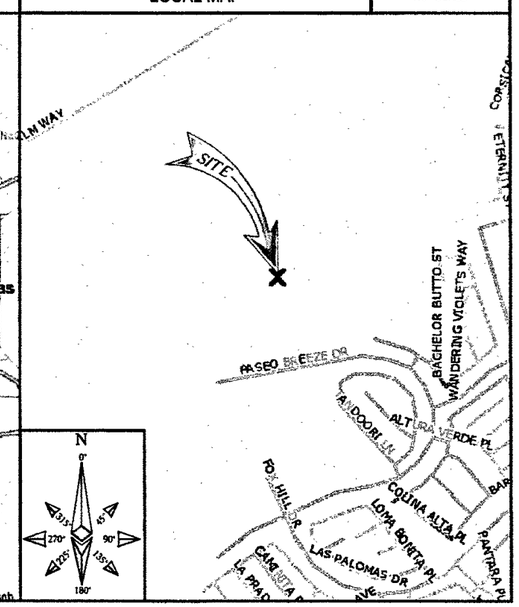

DRIVING DIRECTIONS

DIRECTIONS FROM AT&T OFFICE:

FROM 10550 W CHARLESTON, LAS VEGAS, NV. GO STRAIGHT ON SR 159, TURN RIGHT ONTO DESERT FOOTHILLS DR, TURN LEFT ONTO PASEO MIST DR, TURN RIGHT ONTO PASEO BREEZE DR SITE WILL BE ON THE LEFT.

APPLICABLE CODES

JURISDICTION: CITY OF LAS VEGAS, NEVADA

ALL WORK AND MATERIALS SHALL BE PERFORMED AND INSTALLED IN ACCORDANCE WITH THE CURRENT EDITIONS OF FOLLOWING CODES AS ADOPTED BY THE LOCAL GOVERNING AUTHORITIES. NOTHING IN CONFORMING TO THESE CODES.

- 2018 INTERNATIONAL BUILDING CODE (IBC) WITH NEVADA STATE AMENDMENTS
- 2017 NATIONAL ELECTRIC CODE (NEC) WITH NEVADA STATE AMENDMENTS

IN THE EVENT OF A CONFLICT, THE MOST RESTRICTIVE CODE SHALL PREVAIL.

ALL CONSTRUCTION AND MATERIALS SHALL BE IN ACCORDANCE WITH THE "UNIFORM STANDARD SPECIFICATIONS FOR PUBLIC WORKS CONSTRUCTION OFF-SITE IMPROVEMENTS, CLARK COUNTY AREA NEVADA", LATEST ISSUE; THE "UNIFORM STANDARD DRAWINGS FOR PUBLIC WORKS CONSTRUCTION, CLARK COUNTY AREA NEVADA", LATEST ISSUE; AND OTHER APPLICABLE APPROVED STANDARDS ISSUED BY THE CONTROLLING AGENCY; ALL LOCAL CITY CODES AND ORDINANCES APPLICABLE.

APPROVALS

THE FOLLOWING PARTIES HEREBY APPROVE AND ACCEPT THESE DOCUMENTS & AUTHORIZE THE SUBCONTRACTOR TO PROCEED WITH THE CONSTRUCTION DESCRIBED HEREIN. ALL DOCUMENTS ARE SUBJECT TO REVIEW BY THE LOCAL BUILDING DEPARTMENT & MAY IMPOSE CHANGES OR MODIFICATIONS.

LEASING REPRESENTATIVE: _____	DATE: _____
ZONING VENDOR: _____	DATE: _____
AT&T RF ENGINEER: _____	DATE: _____
CONSTRUCTION MANAGER: _____	DATE: _____
AT&T CX MANAGER: _____	DATE: _____
SITE ACQUISITION MANAGER: _____	DATE: _____
A/E MANAGER: _____	DATE: _____
AT&T PROJECT MANAGER: _____	DATE: _____
PROPERTY OWNER: _____	DATE: _____

DRAWING INDEX

SHEET NO.	SHEET TITLE
T-1	TITLE SHEET
A-1	EXPANDED SITE PLAN AND UTILITY ROUTE
A-1.1	ENLARGED SITE PLAN
A-2	POLE ELEVATIONS AND RISER DETAILS
A-3	EQUIPMENT DETAILS
A-4	EQUIPMENT DETAILS
E-1	ELECTRICAL DETAILS AND DIAGRAMS
E-2	ELECTRICAL CALCULATIONS AND SCHEDULES
E-3	ELECTRICAL ONE-LINE DIAGRAM
G-1	GROUNDING DIAGRAMS
GN-1	GENERAL NOTES, LEGEND AND ABBREVIATIONS
GN-2	GENERAL NOTES
GN-3	GENERAL NOTES
FOR REFERENCE	
LS-1	SMALL CELL SITE SURVEY
–	CITY OF LAS VEGAS CELL SITE APPROVAL

AS-BUILT REDLINE

THE MARK UP ON THIS DRAWING REFLECTS THE AS-BUILT INSTALLATION

Subcontractor: Wecom Inc.	Date: 12.31.19
Field Coordinator	Date
Master Engineer Shall Review Redline Drawings For Errors & Omissions Prior After the Original Drawings Seals Are Also Changed or	
Licensed Civil Engineer: Patrick Flaherty	Date: 12.31.19

11"x17" PLOT WILL BE HALF SCALE UNLESS OTHERWISE NOTED

SUBCONTRACTOR SHALL VERIFY ALL PLANS & EXISTING DIMENSIONS & CONDITIONS ON THE JOB SITE & SHALL IMMEDIATELY NOTIFY THE ENGINEER IN WRITING OF ANY DISCREPANCIES BEFORE PROCEEDING WITH THE WORK OR BE RESPONSIBLE FOR SAME

USA NORTH 811 Call 811 Before You Dig

UNDERGROUND SERVICE ALERT
811 or
1-800-642-2444
48 HOURS BEFORE YOU DIG

811 Know what's below. Call before you dig.

at&t

AT&T MOBILITY
10550 W. CHARLESTON
SUITE B
LAS VEGAS, NV 89135

BLACK & VEATCH

BLACK & VEATCH CORPORATION
8965 S EASTERN AVE
SUITE #325
LAS VEGAS, NV 89123

PROJECT NO:	129084.1514
DRAWN BY:	SBD
CHECKED BY:	GAC

REV	DATE	DESCRIPTION
0	06/04/19	ISSUED FOR CONSTRUCTION

PROFESSIONAL ENGINEER – STATE OF NEVADA
ERIC S. BRANDSTADTER
Exp. 12/31/20
CIVIL
No. 015946
8/19

IT IS A VIOLATION OF LAW FOR ANY PERSON, UNLESS THEY ARE ACTING UNDER THE DIRECTION OF A LICENSED PROFESSIONAL ENGINEER, TO ALTER THIS DOCUMENT.

NVL08228F_R03
ADJACENT TO
12126 ALTA DRIVE
LAS VEGAS, NV 89135
PICO SMALL CELL

SHEET TITLE
TITLE SHEET

SHEET NUMBER
T-1

L19-01127

AS-BUILT REDLINE	
THE MARKUPS ON THIS DRAWING REFLECT THE AS-BUILT INSTALLATION.	
Subcontractor: Wecom Inc.	Date: 12.31.19
Field Construction	Date
Market Turnover: Shall Review Redline Documents To Ensure Changes Do Not Alter The Original Design Intent And Do Not Create Conflicts.	
Market Level Engineer: Patrick Fleming	Date: 12.31.19

THIS DRAWING IS NOT A SITE SURVEY

THE PURPOSE OF THIS DRAWING IS TO SHOW HOW THE DEVELOPED SITE RELATES TO THE PARENT PARCEL AND ADJACENT PROPERTIES. R.O.W. MEASUREMENTS ARE APPROXIMATIONS.

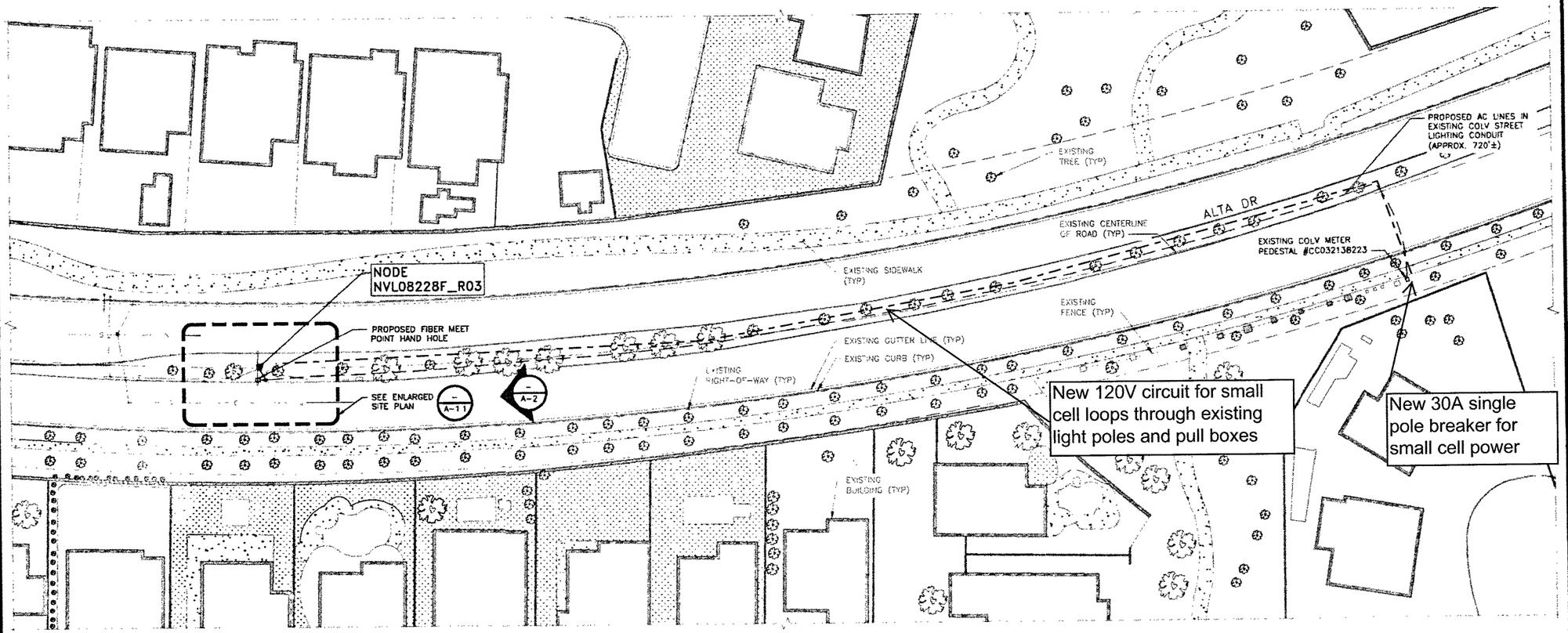

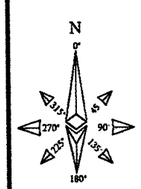

EXPANDED SITE PLAN AND UTILITY ROUTE

32' 24'16' 8' 0 32' 64'
1/32"=1'-0"

A

at&t

AT&T MOBILITY
10550 W. CHARLESTON
SUITE B
LAS VEGAS, NV 89135

BLACK & VEATCH

BLACK & VEATCH CORPORATION
8965 S EASTERN AVE
SUITE #325
LAS VEGAS, NV 89123

PROJECT NO:	129084.1514
DRAWN BY:	SBD
CHECKED BY:	GAC

REV	DATE	DESCRIPTION
0	06/04/19	ISSUED FOR CONSTRUCTION

PROFESSIONAL ENGINEER - STATE OF NEVADA
ERIC S. BRANDSTADTER
Exp. 12/31/20
CIVIL
No. 015918
6/7/19

IT IS A VIOLATION OF LAW FOR ANY PERSON, UNLESS THEY ARE ACTING UNDER THE DIRECTION OF A LICENSED PROFESSIONAL ENGINEER, TO ALTER THIS DOCUMENT.

NVL08228F_R03
ADJACENT TO
12126 ALTA DRIVE
LAS VEGAS, NV 89135
PICO SMALL CELL

SHEET TITLE
EXPANDED SITE PLAN AND UTILITY ROUTE

SHEET NUMBER
A-1

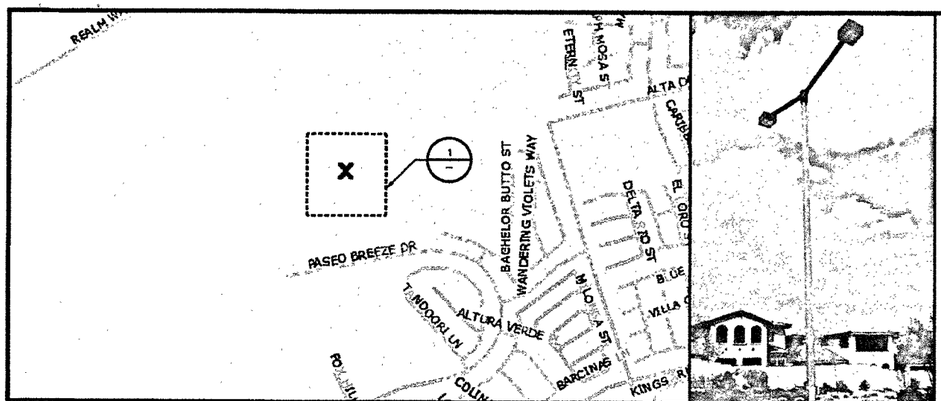

SITE PLAN MAP | NO SCALE | A

SITE PHOTO | B

AS-BUILT REDLINE

THIS MARK-UP ON THIS DRAWING REFLECTS THE AS-BUILT INSTALLATION

Subcontractor: Wecom Inc.	Date: 12.31.19
Field Superintendent	Date
Market Construction Manager: Patrick Flannery	Date: 12.31.19

THIS DRAWING IS NOT A SITE SURVEY

THE PURPOSE OF THIS DRAWING IS TO SHOW HOW THE DEVELOPED SITE RELATES TO THE PARENT PARCEL AND ADJACENT PROPERTIES. R.O.W. MEASUREMENTS ARE APPROXIMATIONS.

ALTA DR

New 120V power circuit for small cell loops through existing light poles and pull boxes

EXISTING COLV CONDUIT INTO EXISTING LIGHT POLE

EXISTING TREE (TYP)

PROPOSED AC LINES IN EXISTING COLV STREET LIGHTING CONDUIT (APPROX. 720'±)

NODE NVL08228F_R03

A.P.N. 13734517001

EXISTING CENTERLINE OF ROAD

A-2

2'-0"±

HH

Location of new 3-1/2 pull box for fiber

EXISTING ELECTRICAL LINE (TYP)

PROPOSED #3-1/2 PULL BOX PLACED TO INTERCEPT EXISTING COLV CONDUIT (9 / A-2)

See new location

PROPOSED 1-1/4" CONDUIT FROM FIBER MEET POINT TO POLE PULL BOX

PROPOSED FIBER OPTIC MEET POINT HAND HOLE (1 / A-4)

By others: COX

EXISTING IRRIGATION BOX (TYP)

EXISTING FIBER OPTIC HANDHOLE

EXISTING GAS LINE

ALTA DR

30'-1"± HANDHOLE TO R.O.W.

31'-1"± UG ELECTRIC LINE TO R.O.W.

17'-9"± UG ELECTRIC LINE TO R.O.W.

PUBLIC RIGHT

EXISTING GUTTER (TYP)

EXISTING CURB (TYP)

EXISTING PUBLIC RIGHT OF-WAY (TYP)

ENLARGED SITE PLAN

4' 2' 0 4' 8'
1/4"=1'-0"

A

at&t

AT&T MOBILITY
10550 W. CHARLESTON
SUITE B
LAS VEGAS, NV 89135

BLACK & VEATCH

BLACK & VEATCH CORPORATION
8965 S EASTERN AVE
SUITE #325
LAS VEGAS, NV 89123

PROJECT NO:	129084.1514
DRAWN BY:	SBD
CHECKED BY:	GAC

REV	DATE	DESCRIPTION
0	06/04/19	ISSUED FOR CONSTRUCTION

PROFESSIONAL ENGINEER - STATE OF NEVADA
ERIC S. BRANDSTADTER
Exp. 12/31/20
CIVIL
No. 015976
12/7/19

IT IS A VIOLATION OF LAW FOR ANY PERSON, UNLESS THEY ARE ACTING UNDER THE DIRECTION OF A LICENSED PROFESSIONAL ENGINEER, TO ALTER THIS DOCUMENT.

NVL08228F_R03
ADJACENT TO
12126 ALTA DRIVE
LAS VEGAS, NV 89135
PICO SMALL CELL

SHEET TITLE

ENLARGED SITE PLAN

SHEET NUMBER

A-1.1

NOTE

THESE DRAWINGS HAVE BEEN CREATED BASED ON STRUCTURAL CALCULATIONS PERFORMED BY BLACK & VEATCH CONFIRMING THAT THE STRUCTURE HAS SUFFICIENT CAPACITY TO SUPPORT THE PROPOSED LOADING.

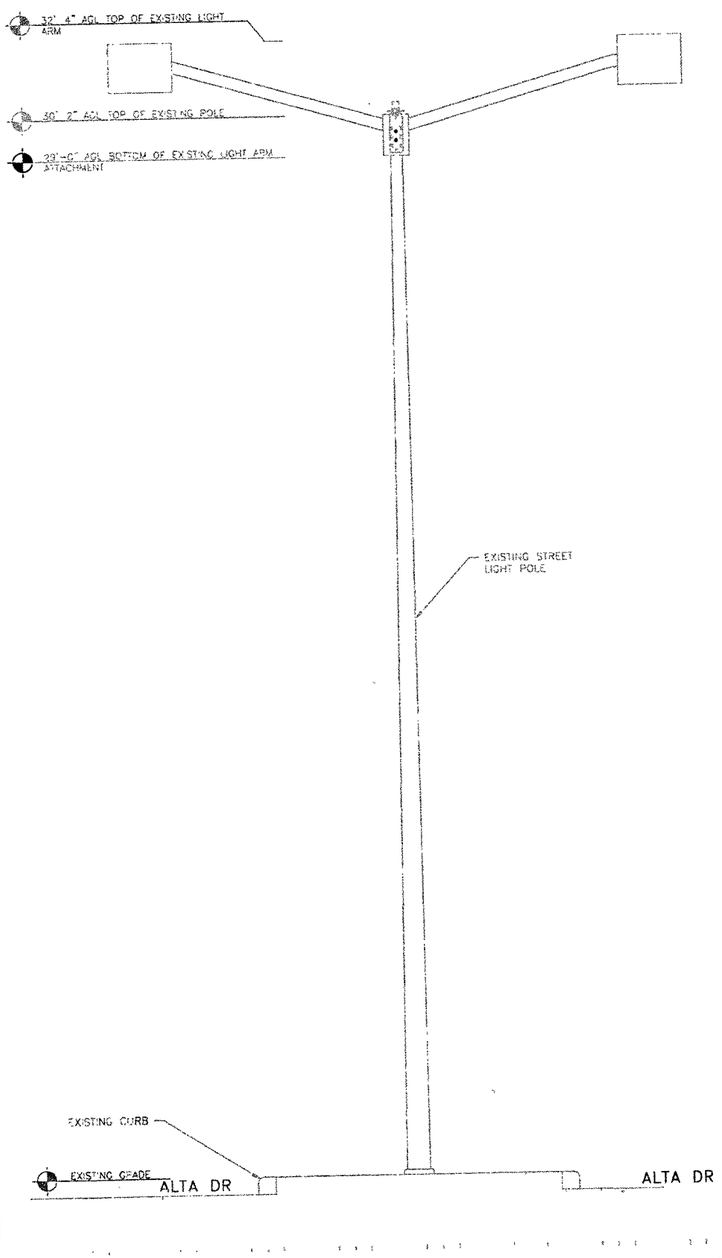

EXISTING EAST ELEVATION | 12" 6" 0 1' 2' 3' 4' 5' 1/2"=1'-0" | A

NOTE

1. REFER TO THE RFDS FOR THIS NODE FOR THE AZIMUTH INFORMATION
2. CABLE SHROUD NOT ENTIRELY SHOWN FOR CLARITY.
3. ALL EQUIPMENT TO BE PAINTED TO MATCH EXISTING STRUCTURE.

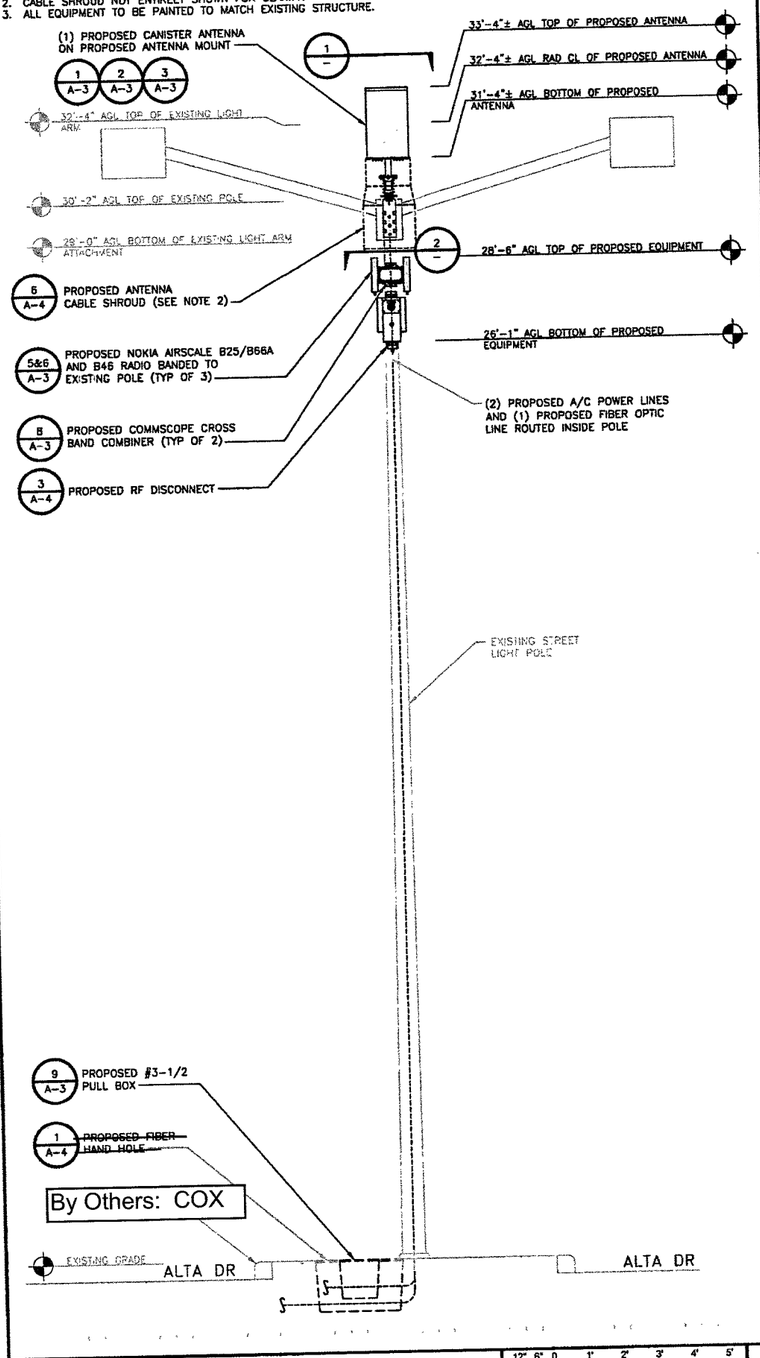

PROPOSED EAST ELEVATION | 12" 6" 0 1' 2' 3' 4' 5' 1/2"=1'-0" | B

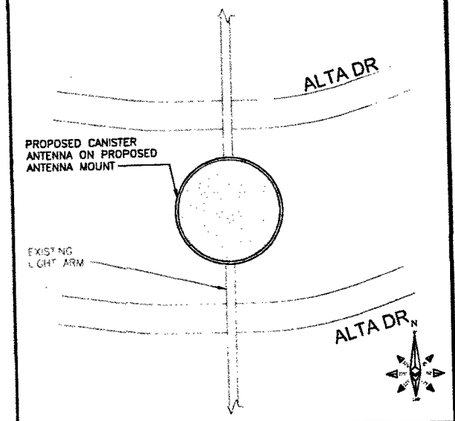

ANTENNA PLAN VIEW | NO SCALE | 1

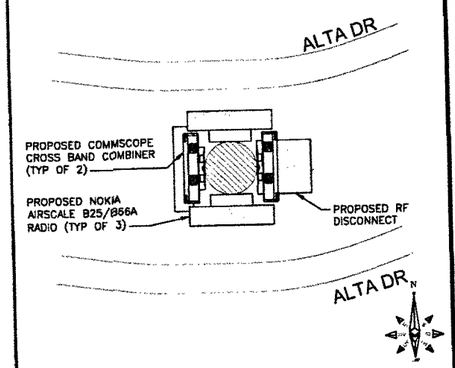

RADIO PLAN VIEW | NO SCALE | 2

AS-BUILT REDLINE	
THE MARKUP ON THIS DRAWING REFLECTS THE AS-BUILT INSTALLATION	
Subcontractor: Wecom Inc.	Date: 12.31.19
Field Coordinator	Date
Notice: Contractor Shall Review Redline Information To Ensure Changes Do Not Affect Original Design Intent And Do Not Violate Code Requirements.	
Station Staff Engineer: Patrick Fleming	Date: 12.31.19

NOT USED | NO SCALE | 3

at&t

AT&T MOBILITY
10550 W. CHARLESTON
SUITE B
LAS VEGAS, NV 89135

BLACK & VEATCH

BLACK & VEATCH CORPORATION
8965 S EASTERN AVE
SUITE #325
LAS VEGAS, NV 89123

PROJECT NO:	129084.1514
DRAWN BY:	SBD
CHECKED BY:	GAC

REV	DATE	DESCRIPTION
0	06/04/19	ISSUED FOR CONSTRUCTION

PROFESSIONAL ENGINEER - STATE OF NEVADA
ERIC S. BRANDSTADTER
Exp. 12/31/20
No. 015916
9/7/19

IT IS A VIOLATION OF LAW FOR ANY PERSON, UNLESS THEY ARE ACTING UNDER THE DIRECTION OF A LICENSED PROFESSIONAL ENGINEER, TO ALTER THIS DOCUMENT.

NVL08228F_R03
ADJACENT TO
12126 ALTA DRIVE
LAS VEGAS, NV 89135
PICO SMALL CELL

SHEET TITLE
POLE ELEVATIONS AND RISER DETAILS

SHEET NUMBER
A-2

GAMMA NU DOYZ9X360F12

DIAMETER:	14.4" (365mm)
HEIGHT:	24" (610mm)
VOLUME:	2.26ft³
TOTAL WEIGHT (WITHOUT MOUNT):	29.7 lbs (13.5 kg)
CONNECTOR INTERFACE:	(12) 4.3–10 FEMALE
RF CONNECTOR LOCATION:	BOTTOM

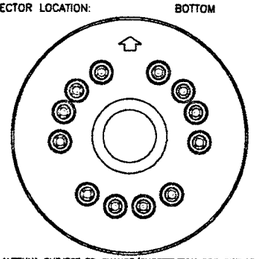

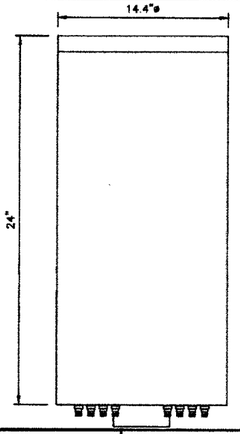

* PROPOSED ANTENNA SUBJECT TO CHANGE/SUBSTITUTION FOR SIMILAR MODEL. PLEASE VERIFY AGAINST CURRENT RFDS PRIOR TO INSTALLATION

ANTENNA SPECIFICATIONS | NO SCALE | 1

CONCEALFAB 900109

DIMENSIONS HxW: 6.38"x7.00"ø (162.05x178mm)

WEIGHT: 4.66 lbs (2.11 kg)

* DETAIL IS FOR GRAPHIC REPRESENTATION, CONTRACTOR MUST REFERENCE MANUFACTURERS DRAWINGS PRIOR TO CONSTRUCTION

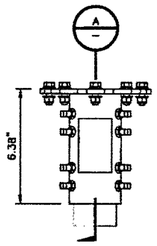

FRONT VIEW

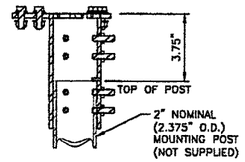

SECTION A

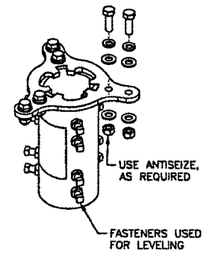

MOUNT ASSEMBLY

ANTENNA SLEEVE MOUNT | NO SCALE | 2

CONCEALFAB 007951

DIMENSIONS HxWxL: 19.875"x12.76"x12.76" (454x324x324 mm)

WEIGHT: 23 lbs (10.3 kg)

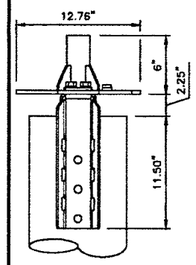

FRONT VIEW
LARGER POLE

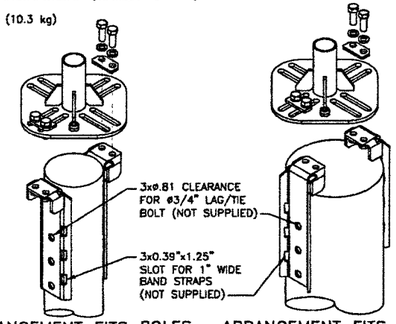

ARRANGEMENT FITS POLES 5–1/4"ø TO 7–1/4"ø

ARRANGEMENT FITS POLES 7–1/4"ø TO 14–1/8"ø

* DETAIL IS FOR GRAPHIC REPRESENTATION, CONTRACTOR MUST REFERENCE MANUFACTURERS DRAWINGS PRIOR TO CONSTRUCTION.

WIDE DIAMETER POLE TOP MOUNT | NO SCALE | 3

AS-BUILT REDLINE

THE MARKUPS ON THIS DRAWING REFLECTS THE AS-BUILT INSTALLATION.

Subcontractor: Wecom Inc.	Date: 12 31 19
Field Construction Manager	Date
Markups Approved By: Project Engineer	Date: 12.31.19

NOT USED | NO SCALE | 4

NOKIA AIRSCALE MICRO B25/B66A RRH

DIMENSIONS, HxWxD:	11.61"x9.65"x2.17" (295x245x55mm)
WEIGHT:	12.79 lbs (5.8 kg)
INTERFACES:	(2) CPRI FRONTHAUL PORTS (1) EXTERNAL ALARM PORT
POWER CONSUMPTION :	TYP. 110W, MAX. 150W
TEMP. RANGE:	-40°C TO +55°C

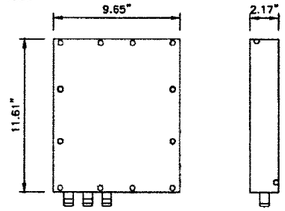

RADIO SPECIFICATIONS | NO SCALE | 5

NOKIA AIRSCALE B46 (LAA) RRH

DIMENSIONS, HxWxD:	11.6"x9.6"x1.6" (294.64x243.84x40.64mm)
WEIGHT:	11.7 lbs (5.31 kg)
INTERFACES:	(1) CPRI SFP INCLUDED
ANTENNA CONFIGURATION:	2T2R
RF:	NEX10 PLUS FEMALE

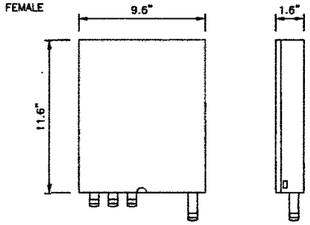

FRONT VIEW SIDE VIEW

RADIO SPECIFICATIONS | NO SCALE | 6

NOT USED | NO SCALE | 7

COMMSCOPE CBC1923T-4310 E11F13P06

DIMENSIONS, WxDxH:	4.6"x1 8"x8.3" (116x46x212mm)
CONNECTORS:	MODULES: (4) 4.3–10 DIN FEMALE ANT. (2) 4.3–10 DIN FEMALE
WEIGHT:	4.9 lbs (2.2 kg)

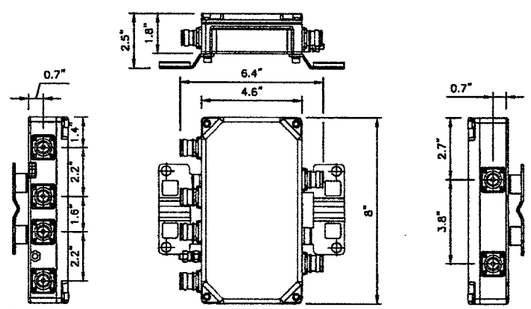

COMBINER SPECIFICATIONS | NO SCALE | 8

NOTES

1 COVERS INSTALLED IN TRAFFIC AND OPEN AREAS ACCESSIBLE TO TRAFFIC SHALL BE PER STANDARD DRAWING NO. 327.

2 SEE STANDARD DRAWING NO 323 FOR COVER GROUNDING

3 REFER TO SHEET GN-1 FOR ADDITIONAL HANDHOLE NOTES.

PULL BOX			
	SIZE (COMMERCIAL DESIGNATION)		
	3-1/2	5	7
A	15	21-3/4	30-5/8
B	10	11-3/4	17-5/8
C	3/4	2	2
D	19-3/8	25	34-3/4
E	14-3/8	15	21-3/4
F	12	12	12
G	N/A	10-1/4	11-1/2

NOMINAL DIMENSION IN INCHES

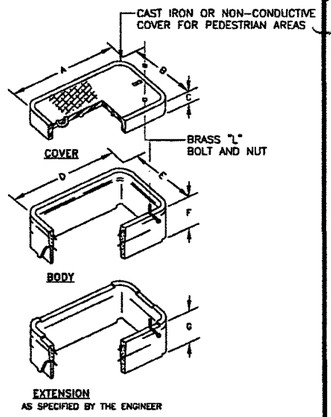

CONCRETE PULL BOX SPECIFICATIONS | NO SCALE | 9

at&t

AT&T MOBILITY
10550 W. CHARLESTON
SUITE B
LAS VEGAS, NV 89135

BLACK & VEATCH

BLACK & VEATCH CORPORATION
8965 S EASTERN AVE
SUITE #325
LAS VEGAS, NV 89123

PROJECT NO:	129084.1514
DRAWN BY:	SBD
CHECKED BY:	GAC

REV	DATE	DESCRIPTION
0	06/04/19	ISSUED FOR CONSTRUCTION

PROFESSIONAL ENGINEER–STATE OF NEVADA
ERIC S. BRANDSTADTER
Exp. 12/31/20
CIVIL
No. 015996
7/19

IT IS A VIOLATION OF LAW FOR ANY PERSON, UNLESS THEY ARE ACTING UNDER THE DIRECTION OF A LICENSED PROFESSIONAL ENGINEER, TO ALTER THIS DOCUMENT.

NVL08228F_R03
ADJACENT TO
12126 ALTA DRIVE
LAS VEGAS, NV 89135
PICO SMALL CELL

SHEET TITLE

EQUIPMENT DETAILS

SHEET NUMBER

A-3

FCA243624T-00006 FIBERGLASS/PCX POLYMER CONCRETE ASSEMBLY

DIMENSIONS (LxWxH): 36"x24"x24"

INTERIOR DIMENSIONS (LXWXH): 33"X21"X21"

- USDA/RUS APPROVED
- DROP-IN NAMEPLATE
- SHIPPED ASSEMBLED
- SKID RESISTANT COVER
- STAINLESS STEEL BOLTS
- CAST-IN FLOATING NUT BOX
- INTEGRAL DRAIN HOLES

LOAD RATINGS:

INCIDENTAL TRAFFIC – PARKING LOT, SIDEWALK

CONFORMS TO:
- WUC 3.6
- ASTM C 857
- ANSI/SCTE 77 –"T15/20K"

INSIDE DIMENSIONS		
Length	Width	Depth
33 1/8"	21 1/2"	21"
43 7/8"	32 3/8"	

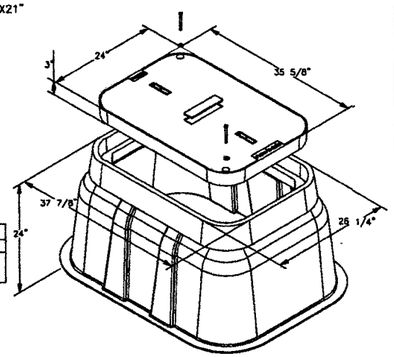

HAND HOLE SPECIFICATIONS | NO SCALE | 1

AS-BUILT REDLINE

THE MARK-UP ON THIS DRAWING REFLECTS THE AS-BUILT INSTALLATION.

Subcontractor: Wecom Inc.	Date: 12.31.19
Field Coordinator:	Date:
Construction Staff Review Only for any Field Changes to Set Plan. The Original Design Intent Shall Not Change.	
Student Civil Engineer: Patrick Flannery	Date: 12.31.19

NOT USED | NO SCALE | 2

PACTECHSOL PTS90123

DIMENSIONS, HxWxD (VOLUME): 16.15"x6.68"x6.285" (0.39ft³)

OPERATING VOLTAGE: 120 VAC

MAIN BREAKER: 60 amps

NUMBER OF BREAKERS (MAX): (5) UL-489 BREAKERS; 0-25 amp; DUAL SPD

POWER INPUT WIRE SIZE: #14-#4 awg CU-Al

POWER OUTPUT WIRE SIZE: #14-#4 awg CU-Al

NEUTRAL & GROUND CONTACTS: #14-#4 AWG CU-Al

TOTAL WEIGHT: 13 lbs

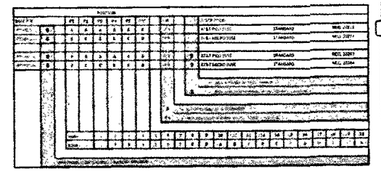

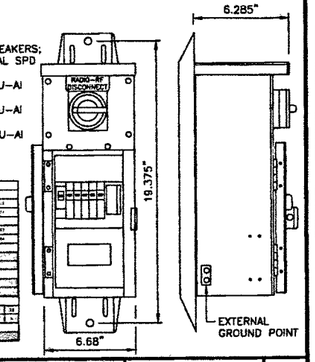

LOAD CENTER DETAIL | NO SCALE | 3

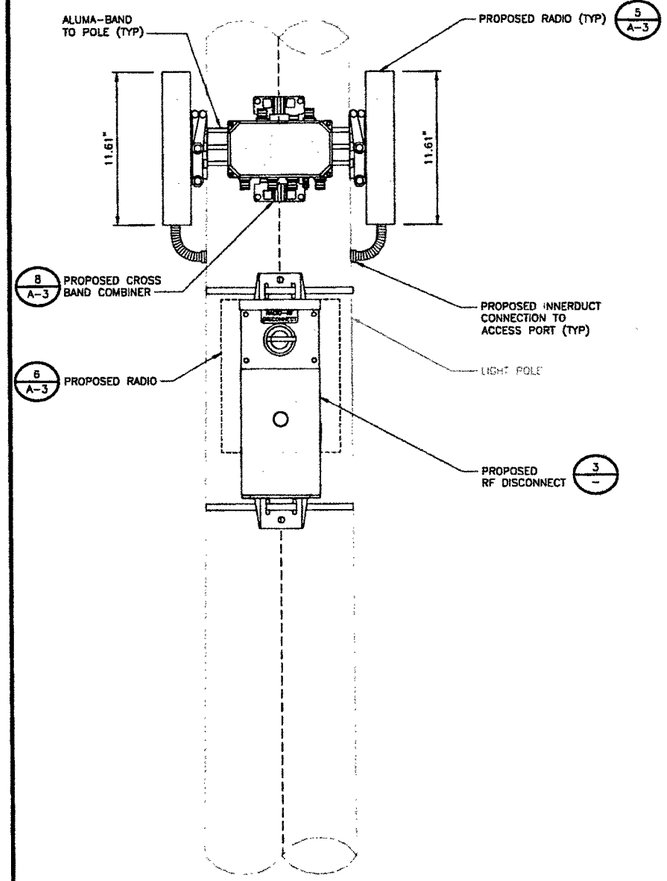

EQUIPMENT PLACEMENT DETAIL | NO SCALE | 4

NOT USED | NO SCALE | 5

CONCEALFAB 007952

HEIGHT: 25" (635mm)

DIAMETER: 17.56" (446mm)

WEIGHT: 8.46 lbs (3.84 kg)

1. INSTALLER SHOULD MOUNT THE ANTENNA DIRECTLY TO THE CABLE SHROUD ARMS IF THE ANTENNA DOES NOT REQUIRE A SINGLE BOLT ADAPTER PLATE.
2. USE ANTI-SEIZE, AS REQUIRED.

* DETAIL IS FOR GRAPHIC REPRESENTATION, CONTRACTOR MUST REFERENCE MANUFACTURERS DRAWINGS PRIOR TO CONSTRUCTION.

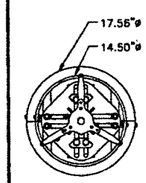

TOP VIEW

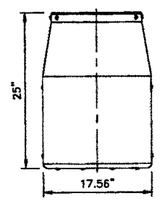

FRONT VIEW

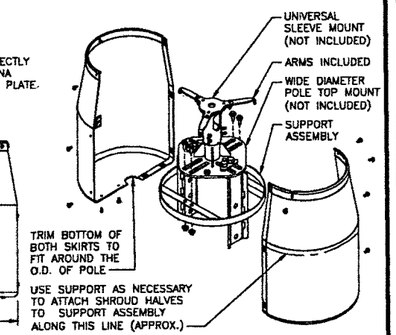

ASSEMBLY VIEW

WIDE DIAMETER CABLE SHROUD | NO SCALE | 6

NOT USED | NO SCALE | 7

NOT USED | NO SCALE | 8

at&t

AT&T MOBILITY
10550 W. CHARLESTON
SUITE B
LAS VEGAS, NV 89135

BLACK & VEATCH

BLACK & VEATCH CORPORATION
8965 S EASTERN AVE
SUITE #325
LAS VEGAS, NV 89123

PROJECT NO:	129084.1514
DRAWN BY:	SBD
CHECKED BY:	GAC

REV	DATE	DESCRIPTION
0	06/04/19	ISSUED FOR CONSTRUCTION

PROFESSIONAL ENGINEER – STATE OF NEVADA
ERIC S. BRANDSTADTER
Exp. 12/31/20
CIVIL
No. 015996

IT IS A VIOLATION OF LAW FOR ANY PERSON, UNLESS THEY ARE ACTING UNDER THE DIRECTION OF A LICENSED PROFESSIONAL ENGINEER, TO ALTER THIS DOCUMENT

NVL08228F_R03
ADJACENT TO
12126 ALTA DRIVE
LAS VEGAS, NV 89135
PICO SMALL CELL

SHEET TITLE
EQUIPMENT DETAILS

SHEET NUMBER
A-4

NOTICE

RF energy emitted by this device may exceed the FCC's general public exposure limits. Stay at least 1 foot away from the device. *Call 800-638-2822 for help if you need access within 1 foot*

RF NOTICE DECAL

AT&T operates antennas at this structure.

Above this point you are entering an area where where radio frequency (RF) fields may exceed the FCC General Population Exposure limits.

Follow safety guidelines for working in an RF environment.

Keep 1 ft. away from the fronts of antennas.

Contact AT&T at 800-638-2822, opt. 9, 3 and follow their instructions prior to performing and maintenance or repairs above this point.

This is AT&T Site USID_____

▲ CAUTION

AT&T operates antennas at this structure.

Above this point you are entering an area where where radio frequency (RF) fields may exceed the FCC General Occupational Exposure limits.

Follow safety guidelines for working in an RF environment.

Keep 1 ft. away from the fronts of antennas.

Contact AT&T at 800-638-2822, opt. 9, 3 and follow their instructions prior to performing and maintenance or repairs above this point.

Cell Site USID_____

EME PLACARD/DECAL

NOTE: SPECIFIC EME PLACARD WILL BE PLACED AFTER EME REPORT

RF SIGNAGE DETAIL | NO SCALE | 1

MULTI-TAP CONNECTOR WITH CLEAR INSULATION, DOUBLE-SIDED (PCSB4-4-6Y)

Not used

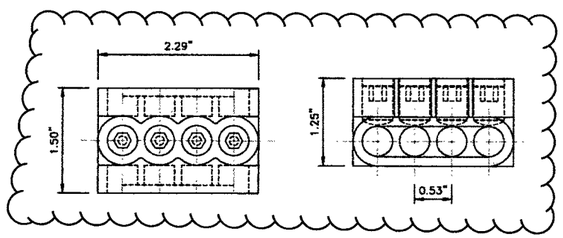

CONNECTOR DETAIL | NO SCALE | 2

BUSSMANN – HEB SERIES

BREAKAWAY MODEL#:	HEB-AW-RLC-A (5.8" LONG)
NON-BREAKAWAY MODEL#:	HEB-AA (4.4" LONG)
WIRE RANGE:	#8-16; (2) #12-16
RECOMMENDED FUSES:	BAF, FNM, FNQ, KLM AND KTK
AMPS:	UP TO 30A
VOLTS:	600V

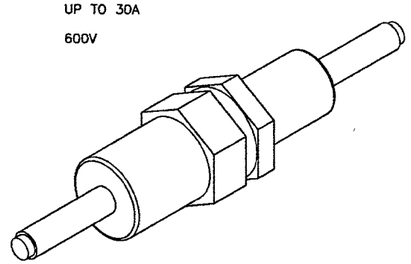

PROPOSED BREAKAWAY AND NON-BREAKAWAY IN-LINE FUSE HOLDER | NO SCALE | 3

NOTES

1. CONTRACTOR IS TO FIELD VERIFY ALL EXISTING ITEMS SHOWN ON THE ELECTRICAL ONE-LINE DIAGRAM AND NOTIFY THE ENGINEER OF ANY DISCREPANCIES.
2. ALL NEW CONDUCTOR WIRE TO BE INSTALLED SHALL BE COPPER THWN-2, THW-2, RHW-2, XHHW-2 WIRE UNLESS NOTED OTHERWISE.
3. ALL GROUNDING AND BONDING TO BE PER THE RECOGNIZED EDITION OF THE NATIONAL ELECTRIC CODE (NEC).
4. ALL INSTALLED CONDUCTORS AND SIGNAL CABLES TO BE CLEARLY MARKED "AT&T SMALL CELL" WITH BRASS OR FIBERGLASS TAGS.

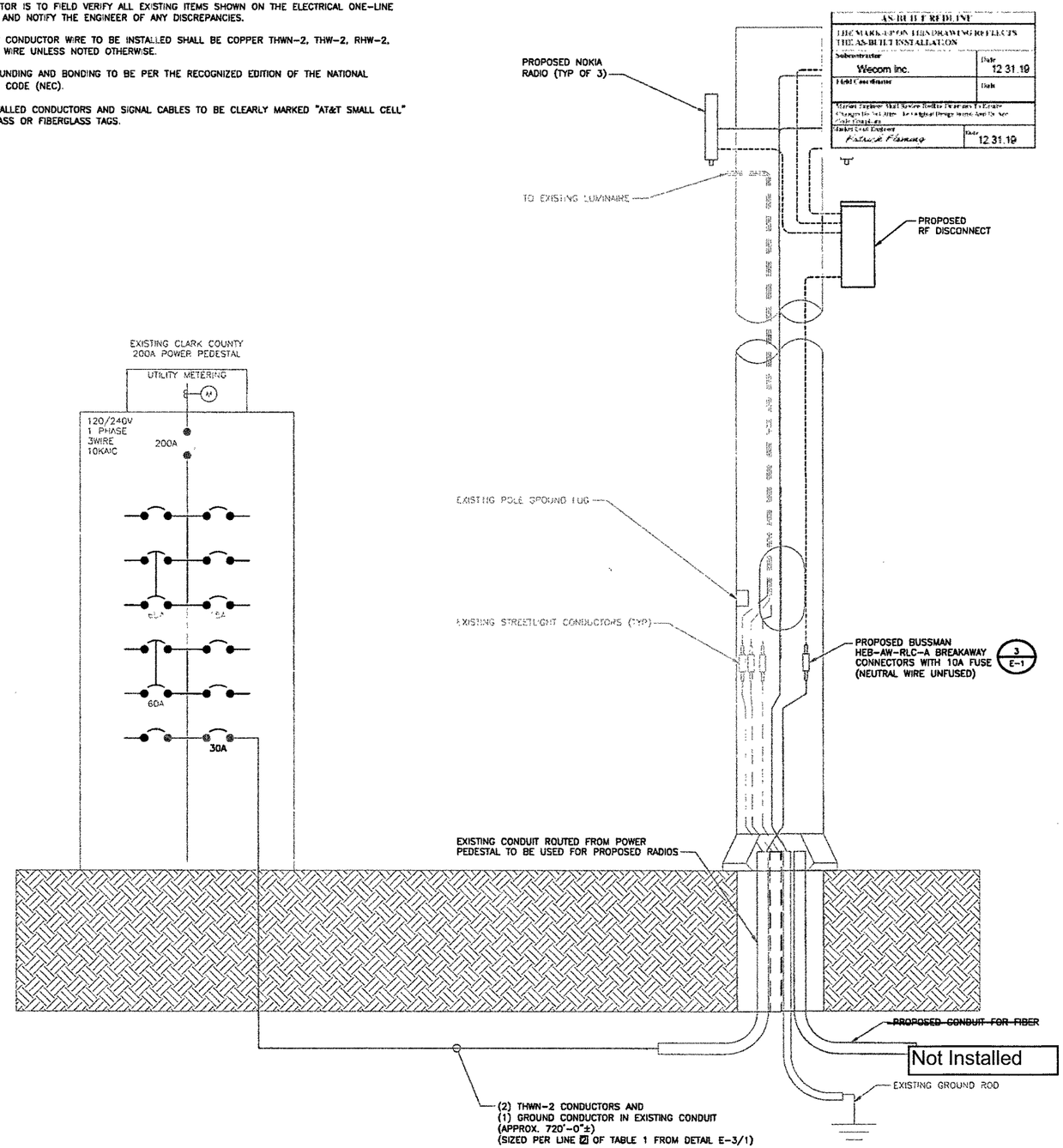

TYPICAL POLE SITE TEMPLATE | NO SCALE | 4

at&t

AT&T MOBILITY
10550 W. CHARLESTON
SUITE B
LAS VEGAS, NV 89135

BLACK & VEATCH

BLACK & VEATCH CORPORATION
8965 S EASTERN AVE
SUITE #325
LAS VEGAS, NV 89123

PROJECT NO:	129084.1514
DRAWN BY:	SBD
CHECKED BY:	GAC

REV	DATE	DESCRIPTION
0	06/04/19	ISSUED FOR CONSTRUCTION

PROFESSIONAL ENGINEER – STATE OF NEVADA
DAVID C. HINTON
Exp. 6/30/2021
ELECTRICAL
No. 025351

IT IS A VIOLATION OF LAW FOR ANY PERSON, UNLESS THEY ARE ACTING UNDER THE DIRECTION OF A LICENSED PROFESSIONAL ENGINEER, TO ALTER THIS DOCUMENT.

NVL08228F_R03
ADJACENT TO
12126 ALTA DRIVE
LAS VEGAS, NV 89135
PICO SMALL CELL

SHEET TITLE
ELECTRICAL DETAILS AND DIAGRAMS

SHEET NUMBER
E-1

EXISTING ELECTRICAL LOAD STUDY

EXISTING LOAD.....29.50 AMPS
ALLOWED LOAD 80%.....160.00 AMPS

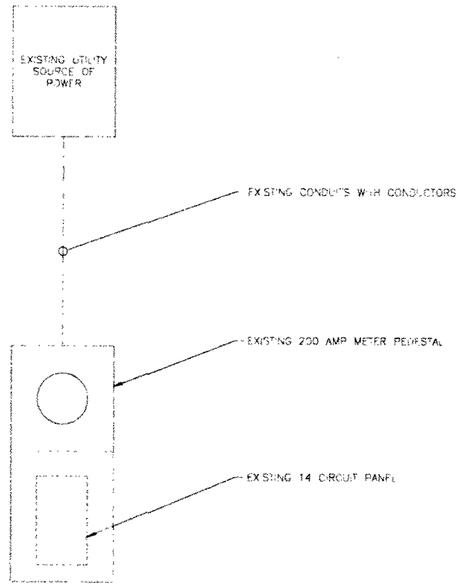

EXISTING SINGLE LINE DIAGRAM | NO SCALE | 1

PROPOSED ELECTRICAL LOAD STUDY

EXISTING LOAD.....29.50 AMPS
SAFETY FACTOR 125%.....36.88 AMPS
PROPOSED LOAD.....2.34 AMPS
TOTAL LOAD.....39.22 AMPS
ALLOWED LOAD 80% OF 200 AMPS.....160.00 AMPS

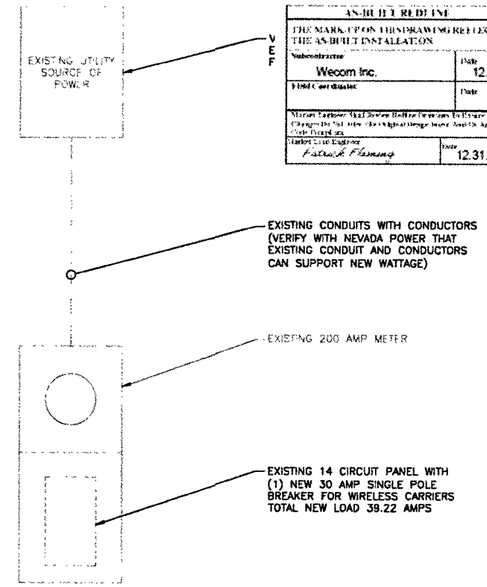

AS-BUILT REDLINE
THE MARK-UP ON THIS DRAWING REFLECTS THE AS-BUILT INSTALLATION
Subcontractor: Wecom Inc. Date 12.31.19
Field Coordinator: Date
Marked Contractor Shall Review Redline Drawings For Errors Or Omissions. Changes Do Not Alter The Original Design Intent And Do Not Supersede Original Drawings.
Darbert Civil Engineer: Patrick Fleming Date 12.31.19

PROPOSED SINGLE LINE DIAGRAM | NO SCALE | 2

Site Name: *12126 ALTA DRIVE*
SITE NUMBER: *CRAN_NVL08228F_R03*
VOLTAGE: 240 /120 Volts AC
MAIN BREAKER: 200 AMPS
MOUNT: *SURFACE*
ENCLOSURE TYPE: *NEMA 3R*
PANEL STATUS: *EXISTING*
MODEL NUMBER: *EXISTING METER AND LOAD CENTER PEDESTAL*
PHASE: 1 WIRE: 3
BUSS RATING: 200 AMPS

CKT	LOAD DESCRIPTION	BREAKER AMPS	BREAKER POLES	BREAKER STATUS	SERVICE LOAD VA	Demand Factor	USAGE FACTOR	PHASE A VA	PHASE B VA	USAGE FACTOR	Demand Factor	SERVICE LOAD VA	BREAKER STATUS	BREAKER POLES	BREAKER AMPS	LOAD DESCRIPTION	CKT
1								0		1.00	1.00	0	ON	2	200	MAIN	2
3	STREET LIGHTS	60	2	ON	1680	1.00	1.25		2100	1.00	1.00	0					4
5					1800	1.00	1.25	2400		1.25	1.00	120	ON	1	15	PHOTO CELL	6
7	STREET LIGHTS	60	2	ON	1680	1.00	1.25		2100								8
9					1800	1.00	1.25	2250									10
11									0								12
13								563		1.25	1.00	450	NEW	1	30	PACTECHSOL PTS90122-3-AA77-PN-8	14
								PHASE A	PHASE B								
								5213	4200	VA							
									TOTAL	KVA	9.41						
										AMPS	39.22	≤ 80% OF MAIN BREAKER					

PROPOSED PANEL SCHEDULE AND CALCS | NO SCALE | 3

at&t
AT&T MOBILITY
10550 W. CHARLESTON
SUITE B
LAS VEGAS, NV 89135

BLACK & VEATCH
BLACK & VEATCH CORPORATION
8965 S EASTERN AVE
SUITE #325
LAS VEGAS, NV 89123

PROJECT NO:	129084.1514
DRAWN BY:	SBD
CHECKED BY:	GAC

REV	DATE	DESCRIPTION
0	08/04/19	ISSUED FOR CONSTRUCTION

PROFESSIONAL ENGINEER - STATE OF NEVADA
DAVID C. HINTON
Exp. 6/29/2021
ELECTRICAL
No. 025351

IT IS A VIOLATION OF LAW FOR ANY PERSON, UNLESS THEY ARE ACTING UNDER THE DIRECTION OF A LICENSED PROFESSIONAL ENGINEER, TO ALTER THIS DOCUMENT.

NVL08228F_R03
ADJACENT TO
12126 ALTA DRIVE
LAS VEGAS, NV 89135
PICO SMALL CELL

SHEET TITLE
ELECTRICAL CALCULATIONS AND SCHEDULES

SHEET NUMBER
E-2

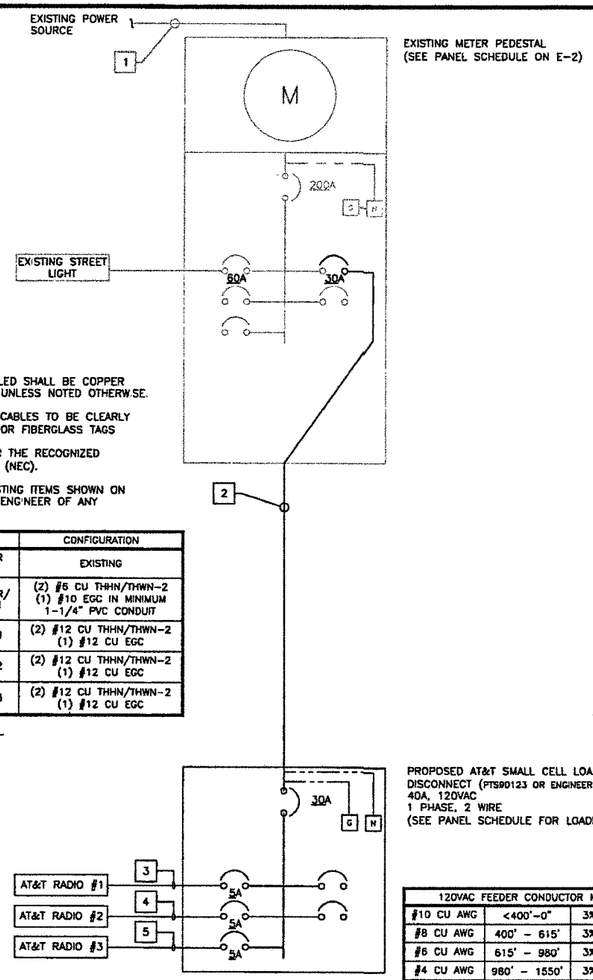

NOTES:

1. ALL NEW CONDUCTOR WIRE TO BE INSTALLED SHALL BE COPPER THWN-2, THW-2, RHW-2, XHHW-2 WIRE UNLESS NOTED OTHERWISE.
2. ALL INSTALLED CONDUCTORS AND SIGNAL CABLES TO BE CLEARLY MARKED "AT&T SMALL CELL" WITH BRASS OR FIBERGLASS TAGS
3. ALL GROUNDING AND BONDING TO BE PER THE RECOGNIZED EDITION OF THE NATIONAL ELECTRIC CODE (NEC).
4. CONTRACTOR IS TO FIELD VERIFY ALL EXISTING ITEMS SHOWN ON THE ONE-LINE DIAGRAM AND NOTIFY THE ENGINEER OF ANY DISCREPANCIES.

NO	FROM	TO	CONFIGURATION
1	UTILITY P.O.C.	EXISTING METER PEDESTAL	EXISTING
2	EXISTING METER PEDESTAL	AC LOAD CENTER/ SAFETY SWITCH	(2) #6 CU THHN/THWN-2 (1) #10 EGC IN MINIMUM 1-1/4" PVC CONDUIT
3	AC LOAD CENTER/ SAFETY SWITCH	AT&T RADIO #1	(2) #12 CU THHN/THWN-2 (1) #12 CU EGC
4	AC LOAD CENTER/ SAFETY SWITCH	AT&T RADIO #2	(2) #12 CU THHN/THWN-2 (1) #12 CU EGC
5	AC LOAD CENTER/ SAFETY SWITCH	AT&T RADIO #3	(2) #12 CU THHN/THWN-2 (1) #12 CU EGC

TABLE 1

120VAC FEEDER CONDUCTOR MAXIMUM DISTANCE		
#10 CU AWG	<400'-0"	3% VOLT DROP @ 3.75A
#8 CU AWG	400' – 615'	3% VOLT DROP @ 3.75A
#6 CU AWG	615' – 980'	3% VOLT DROP @ 3.75A
#4 CU AWG	980' – 1550'	3% VOLT DROP @ 3.75A
#3 CU AWG	1550' – 1920'	3% VOLT DROP @ 3.75A
#2 CU AWG	1920' – 2530'	3% VOLT DROP @ 3.75A

Site Name	12126 ALTA DRIVE						MODEL NUMBER		PACTECHSOL PTS90123								
SITE NUMBER:	NVL08228F_R03						PHASE		1			WIRE			3		
VOLTAGE:		120		Volts AC			BUSS RATING		40	AMPS							
MAIN BREAKER:			AMPS														
MOUNT		SURFACE															
ENCLOSURE TYPE:		NEMA 3R															
PANEL STATUS:		PROPOSED															
CKT	LOAD DESCRIPTION	BREAKER AMPS	BREAKER POLES	BREAKER STATUS	SERVICE LOAD VA	Demand Factor	USAGE FACTOR	PHASE A VA	PHASE B VA	USAGE FACTOR	Demand Factor	SERVICE LOAD VA	BREAKER STATUS	BREAKER POLES	BREAKER AMPS	LOAD DESCRIPTION	CKT
1	NOKIA AIRSCALE MICRO B25/B66 RRH	5	1	NEW	150	1.00	1.00	150									2
2									0								4
3	NOKIA AIRSCALE MICRO B25/B66 RRH	5	1	NEW	150	1.00	1.00	150									6
4									0								8
5	NOKIA AIRSCALE MICRO B25/B66 RRH	5	1	NEW	150	1.00	1.00	150									10
	1. PANEL SCHEDULE LOADING AND CIRCUIT ARRANGEMENTS REFLECT POST-CONSTRUCTION EQUIPMENT.							450	0	VA							
									TOTAL	KVA	0.45						
										AMPS	3.75	≤ 80% OF MAIN BREAKER					

ELECTRICAL ONE-LINE DIAGRAM (PICO) | NO SCALE | 1

AS-BUILT REDLINE

THE MARK-UPS ON THIS DRAWING REFLECTS THE AS-BUILT INSTALLATION

Subcontractor: Wecom Inc.	Date: 12.31.19
Field Construction	Date
Market Construction Manager: Jeff Bowen (Redline Revisions Incorporated) Changes to "As-Built" Original Design Intent Implied upon Close Output as	
Market Lead Engineer: Patrick Flanary	Date: 12.31.19

NOT USED | NO SCALE | 2

at&t

AT&T MOBILITY
10550 W. CHARLESTON
SUITE B
LAS VEGAS, NV 89135

BLACK & VEATCH

BLACK & VEATCH CORPORATION
8965 S EASTERN AVE
SUITE #325
LAS VEGAS, NV 89123

PROJECT NO:	129084.1514
DRAWN BY:	SBD
CHECKED BY:	GAC

REV	DATE	DESCRIPTION
0	06/04/19	ISSUED FOR CONSTRUCTION

PROFESSIONAL ENGINEER - STATE OF NEVADA
DAVID C. HINTON
Exp. 6/30/2021
ELECTRICAL
No. 02535

IT IS A VIOLATION OF LAW FOR ANY PERSON, UNLESS THEY ARE ACTING UNDER THE DIRECTION OF A LICENSED PROFESSIONAL ENGINEER, TO ALTER THIS DOCUMENT.

NVL08228F_R03
ADJACENT TO
12126 ALTA DRIVE
LAS VEGAS, NV 89135
PICO SMALL CELL

SHEET TITLE
ELECTRICAL ONE-LINE DIAGRAM

SHEET NUMBER
E-3

NOTES

1. FOR CONDUIT SIZE AND WIRING REQUIREMENTS FOR STREETLIGHT SERVICE, SEE STANDARD DRAWING NO. 332.S2 FOR LAS VEGAS AND CLARK COUNTY ONLY AND 332.S1 FOR ALL OTHER ENTITIES.
2. SEE STANDARD DRAWING NO. 321, 332.S1, OR 332.S2.

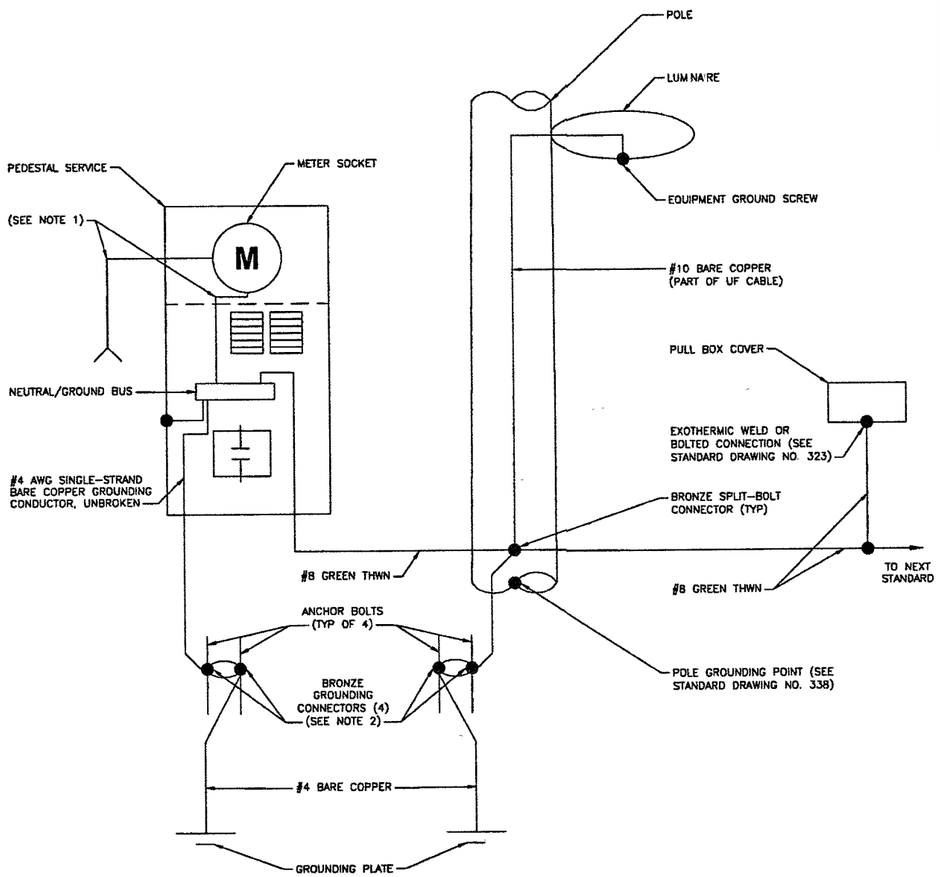

METER PEDESTAL GROUNDING DIAGRAM | NO SCALE | 1

NOTES

1. 125 AMP SERVICE: 1 #4 WHITE THW
   200 AMP SERVICE: 1 #1/0 WHITE THW

AS-BUILT REDLINE	
THE MARKUP ON THIS DRAWING REFLECTS THE AS-BUILT INSTALLATION	
Subcontractor: Wecom Inc.	Date: 12.31.19
Field Coordinator	Date
District Engineer: Patrick Flaherty	Date: 12.31.19

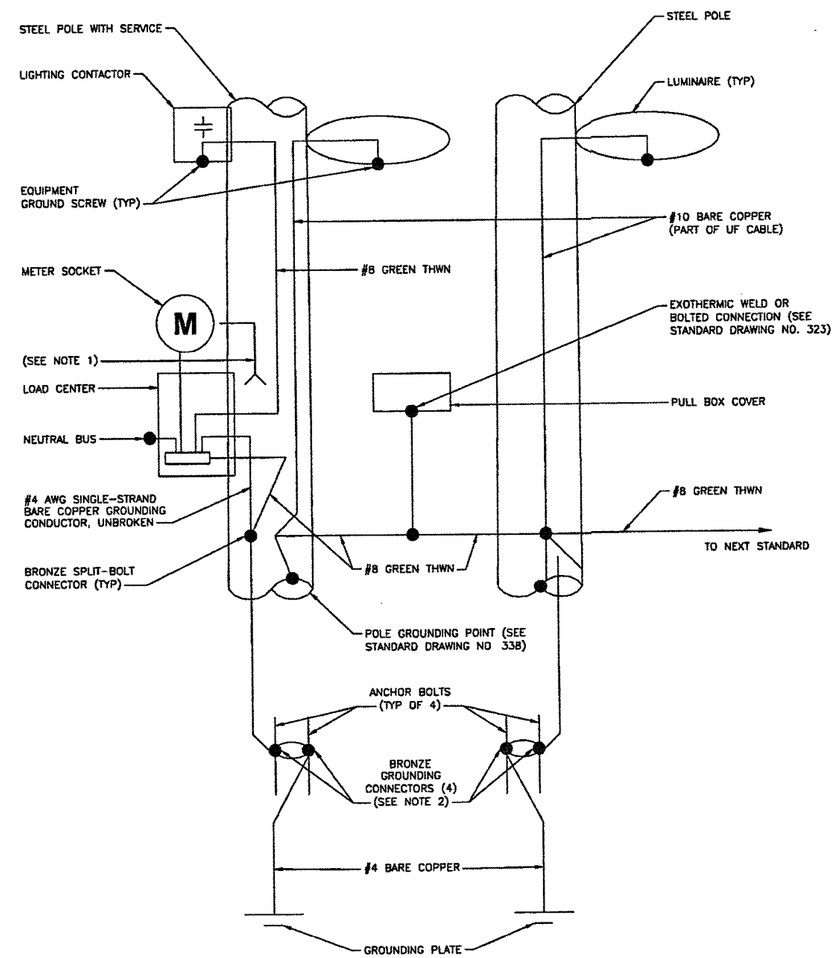

POLE EQUIPMENT GROUNDING DIAGRAM | NO SCALE | 2

at&t

AT&T MOBILITY
10550 W. CHARLESTON
SUITE B
LAS VEGAS, NV 89135

BLACK & VEATCH

BLACK & VEATCH CORPORATION
8965 S EASTERN AVE
SUITE #325
LAS VEGAS, NV 89123

PROJECT NO:	129084.1514
DRAWN BY:	SBD
CHECKED BY:	GAC

REV	DATE	DESCRIPTION
0	06/04/19	ISSUED FOR CONSTRUCTION

PROFESSIONAL ENGINEER - STATE OF NEVADA
DAVID C. HINTON
Exp. 6/29/2021
ELECTRICAL
No. 025351

IT IS A VIOLATION OF LAW FOR ANY PERSON, UNLESS THEY ARE ACTING UNDER THE DIRECTION OF A LICENSED PROFESSIONAL ENGINEER, TO ALTER THIS DOCUMENT.

NVL08228F_R03
ADJACENT TO
12126 ALTA DRIVE
LAS VEGAS, NV 89135
PICO SMALL CELL

SHEET TITLE

GROUNDING DIAGRAMS

SHEET NUMBER

G-1

1. FOR THE PURPOSE OF CONSTRUCTION DRAWINGS, THE FOLLOWING DEFINITIONS SHALL APPLY:
   GENERAL CONTRACTOR – OVERLAND CONTRACTING INC. (B&V)
   SUBCONTRACTOR – CONTRACTOR (CONSTRUCTION)
   OWNER – AT&T
2. ALL SITE WORK SHALL BE COMPLETED AS INDICATED ON THE DRAWINGS.
3. GENERAL CONTRACTOR AND SUBCONTRACTOR SHALL VISIT THE SITE AND SHALL BECOME FAMILIAR WITH ALL CONDITIONS AFFECTING THE PROPOSED WORK AND SHALL MAKE PROVISIONS. GENERAL CONTRACTOR AND SUBCONTRACTOR SHALL BE RESPONSIBLE FOR FAMILIARIZING HIMSELF WITH ALL CONTRACT DOCUMENTS, FIELD CONDITIONS, DIMENSIONS, AND CONFIRMING THAT THE WORK MAY BE ACCOMPLISHED AS SHOWN PRIOR TO PROCEEDING WITH CONSTRUCTION. ANY DISCREPANCIES SHALL BE BROUGHT TO THE ATTENTION OF THE ENGINEER PRIOR TO THE COMMENCEMENT OF WORK.
4. ALL MATERIALS FURNISHED AND INSTALLED SHALL BE IN STRICT ACCORDANCE WITH ALL APPLICABLE CODES, REGULATIONS, AND ORDINANCES. GENERAL CONTRACTOR SHALL ISSUE ALL APPROPRIATE NOTICES AND COMPLY WITH ALL LAWS, ORDINANCES, RULES, REGULATIONS, AND LAWFUL ORDERS OF ANY PUBLIC AUTHORITY REGARDING THE PERFORMANCE OF WORK.
5. ALL WORK CARRIED OUT SHALL COMPLY WITH ALL APPLICABLE MUNICIPAL AND UTILITY COMPANY SPECIFICATIONS AND LOCAL JURISDICTIONAL CODES, ORDINANCES, AND APPLICABLE REGULATIONS.
6. UNLESS NOTED OTHERWISE, THE WORK SHALL INCLUDE FURNISHING MATERIALS, EQUIPMENT, APPURTENANCES, AND LABOR NECESSARY TO COMPLETE ALL INSTALLATIONS AS INDICATED ON THE DRAWINGS.
7. PLANS ARE NOT TO BE SCALED. THESE PLANS ARE INTENDED TO BE A DIAGRAMMATIC OUTLINE ONLY UNLESS OTHERWISE NOTED. DIMENSIONS SHOWN ARE TO FINISH SURFACES UNLESS OTHERWISE NOTED. SPACING BETWEEN EQUIPMENT IS THE MINIMUM REQUIRED CLEARANCE. THEREFORE, IT IS CRITICAL TO FIELD VERIFY DIMENSIONS, SHOULD THERE BE ANY QUESTIONS REGARDING THE CONTRACT DOCUMENTS, THE SUBCONTRACTOR SHALL BE RESPONSIBLE FOR OBTAINING A CLARIFICATION FROM THE ENGINEER PRIOR TO PROCEEDING WITH THE WORK. DETAILS ARE INTENDED TO SHOWN DESIGN INTENT MODIFICATIONS MAY BE REQUIRED TO SUIT JOB DIMENSIONS OR CONDITIONS AND SUCH MODIFICATIONS SHALL BE INCLUDED AS PART OF WORK AND PREPARED BY THE ENGINEER PRIOR TO PROCEEDING WITH WORK.
8. THE SUBCONTRACTOR SHALL INSTALL ALL EQUIPMENT AND MATERIALS IN ACCORDANCE WITH MANUFACTURER'S RECOMMENDATIONS UNLESS SPECIFICALLY STATED OTHERWISE.
9. IF THE SPECIFIED EQUIPMENT CANNOT BE INSTALLED AS SHOWN ON THESE DRAWINGS, THE SUBCONTRACTOR SHALL PROPOSE AN ALTERNATIVE INSTALLATION SPACE FOR APPROVAL BY THE ENGINEER AND DSA PRIOR TO PROCEEDING.
10. GENERAL CONTRACTOR SHALL BE RESPONSIBLE FOR THE SAFETY OF WORK AREA, ADJACENT AREAS AND BUILDING OCCUPANTS THAT ARE LIKELY TO BE AFFECTED BY THE WORK UNDER THIS CONTRACT. WORK SHALL CONFORM TO ALL OSHA REQUIREMENTS AND THE LOCAL JURISDICTION.
11. GENERAL CONTRACTOR SHALL COORDINATE WORK AND SCHEDULE WORK ACTIVITIES WITH OTHER DISCIPLINES.
12. ERECTION SHALL BE DONE IN A WORKMANLIKE MANNER BY COMPETENT EXPERIENCED WORKMAN IN ACCORDANCE WITH APPLICABLE CODES AND THE BEST ACCEPTED PRACTICE. ALL MEMBERS SHALL BE LAID PLUMB AND TRUE AS INDICATED ON THE DRAWINGS.
13. SEAL ANY PENETRATION WITH UL LISTED MATERIALS APPROVED BY LOCAL JURISDICTION. SUBCONTRACTOR SHALL KEEP AREA CLEAN, HAZARD FREE, AND DISPOSE OF ALL DEBRIS
14. WORK PREVIOUSLY COMPLETED IS REPRESENTED BY LIGHT SHADED LINES AND NOTES. THE SCOPE OF WORK FOR THIS PROJECT IS REPRESENTED BY DARK SHADED LINES AND NOTES. SUBCONTRACTOR SHALL NOTIFY THE GENERAL CONTRACTOR OF ANY EXISTING CONDITIONS THAT DEVIATE FROM THE DRAWINGS PRIOR TO BEGINNING CONSTRUCTION.
15. SUBCONTRACTOR SHALL PROVIDE WRITTEN NOTICE TO THE CONSTRUCTION MANAGER 48 HOURS PRIOR TO COMMENCEMENT OF WORK.
16. THE SUBCONTRACTOR SHALL PROTECT EXISTING IMPROVEMENTS, PAVEMENTS, CURBS, LANDSCAPING AND STRUCTURES. ANY DAMAGED PART SHALL BE REPAIRED AT SUBCONTRACTOR'S EXPENSE TO THE SATISFACTION OF THE OWNER.
17. THE SUBCONTRACTOR SHALL CONTACT UTILITY LOCATING SERVICES PRIOR TO THE START OF CONSTRUCTION.
18. GENERAL CONTRACTOR SHALL COORDINATE AND MAINTAIN ACCESS FOR ALL TRADES AND SUBCONTRACTORS TO THE SITE AND/OR BUILDING.
19. THE GENERAL CONTRACTOR SHALL BE RESPONSIBLE FOR SECURITY OF THE SITE FOR THE DURATION OF CONSTRUCTION UNTIL JOB COMPLETION.
20. THE GENERAL CONTRACTOR SHALL MAINTAIN IN GOOD CONDITION ONE COMPLETE SET OF PLANS WITH ALL REVISIONS, ADDENDA, AND CHANGE ORDERS ON THE PREMISES AT ALL TIMES.
21. THE GENERAL CONTRACTOR AND SUBCONTRACTOR SHALL PROVIDE PORTABLE FIRE EXTINGUISHERS WITH A RATING OF NOT LESS THAN 2–A OT 2–A.10–B C AND SHALL BE WITHIN 25 FEET OF TRAVEL DISTANCE TO ALL PORTIONS OF WHERE THE WORK IS BEING COMPLETED DURING CONSTRUCTION.
22. ALL EXISTING ACTIVE SEWER, WATER, GAS, ELECTRIC, AND OTHER UTILITIES SHALL BE PROTECTED AT ALL TIMES, AND WHERE REQUIRED FOR THE PROPER EXECUTION OF THE WORK, SHALL BE RELOCATED AS DIRECTED BY THE ENGINEER. EXTREME CAUTION SHOULD BE USED BY THE SUBCONTRACTOR WHEN EXCAVATING OR DRILLING PIERS AROUND OR NEAR UTILITIES. SUBCONTRACTOR SHALL PROVIDE SAFETY TRAINING FOR THE WORKING CREW. THIS SHALL INCLUDE BUT NOT BE LIMITED TO A) FALL PROTECTION, B) CONFINED SPACE, C) ELECTRICAL SAFETY, AND D) TRENCHING & EXCAVATION.
23. ALL EXISTING INACTIVE SEWER, WATER, GAS, ELECTRIC AND OTHER UTILITIES, WHICH INTERFERE WITH THE EXECUTION OF THE WORK, SHALL BE REMOVED, CAPPED, PLUGGED OR OTHERWISE DISCONNECTED AT POINTS WHICH WILL NOT INTERFERE WITH THE EXECUTION OF THE WORK, AS DIRECTED BY THE RESPONSIBLE ENGINEER, AND SUBJECT TO THE APPROVAL OF THE OWNER AND/OR LOCAL UTILITIES.
24. THE AREAS OF THE OWNER'S PROPERTY DISTURBED BY THE WORK AND NOT COVERED BY THE TOWER, EQUIPMENT OR DRIVEWAY, SHALL BE GRADED TO A UNIFORM SLOPE, AND STABILIZED TO PREVENT EROSION.
25. SUBCONTRACTOR SHALL MINIMIZE DISTURBANCE TO THE EXISTING SITE DURING CONSTRUCTION. EROSION CONTROL MEASURES, IF REQUIRED DURING CONSTRUCTION, SHALL BE IN CONFORMANCE WITH THE FEDERAL AND LOCAL JURISDICTION FOR EROSION AND SEDIMENT CONTROL.
26. NO FILL OR EMBANKMENT MATERIAL SHALL BE PLACED ON FROZEN GROUNDING. FROZEN MATERIALS, SNOW OR ICE SHALL NOT BE PLACED IN ANY FILL OR EMBANKMENT.
27. THE SUBGRADE SHALL BE BROUGHT TO A SMOOTH UNIFORM GRADE AND COMPACTED TO 95 PERCENT STANDARD PROCTOR DENSITY UNDER PAVEMENT AND STRUCTURES AND 80 PERCENT STANDARD PROCTOR DENSITY IN OPEN SPACE. ALL TRENCHES IN PUBLIC RIGHT OF WAY SHALL BE BACKFILLED WITH FLOWABLE FILL OR OTHER MATERIAL PRE–APPROVED BY THE LOCAL JURISDICTION.
28. ALL NECESSARY RUBBISH, STUMPS, DEBRIS, STICKS, STONES, AND OTHER REFUSE SHALL BE REMOVED FROM THE SITE AND DISPOSED OF IN A LAWFUL MANNER.
29. ALL BROCHURES, OPERATING AND MAINTENANCE MANUALS, CATALOGS, SHOP DRAWINGS, AND OTHER DOCUMENTS SHALL BE TURNED OVER TO THE GENERAL CONTRACTOR AT COMPLETION OF CONSTRUCTION AND PRIOR TO PAYMENT.
30. CONTRACTOR SHALL SUBMIT A COMPLETE SET OF AS–BUILT REDLINES TO THE GENERAL CONTRACTOR UPON COMPLETION OF PROJECT AND PRIOR TO FINAL PAYMENT.
31. CONTRACTOR SHALL LEAVE PREMISES IN A CLEAN CONDITION.
32. THE PROPOSED FACILITY WILL BE UNMANNED AND DOES NOT REQUIRE POTABLE WATER OR SEWER SERVICE, AND IS NOT FOR HUMAN HABITAT (NO HANDICAP ACCESS REQUIRED).
33. OCCUPANCY IS LIMITED TO PERIODIC MAINTENANCE AND INSPECTION, APPROXIMATELY 2 TIMES PER MONTH, BY AT&T TECHNICIANS.
34. NO OUTDOOR STORAGE OR SOLID WASTE CONTAINERS ARE PROPOSED.
35. ALL MATERIAL SHALL BE FURNISHED AND WORK SHALL BE PERFORMED IN ACCORDANCE WITH THE LATEST REVISION AT&T MOBILITY GROUNDING STANDARD "TECHNICAL SPECIFICATION FOR CONSTRUCTION OF GSM/GPRS WIRELESS SITES" AND "TECHNICAL SPECIFICATION FOR FACILITY GROUNDING". IN CASE OF A CONFLICT BETWEEN THE CONSTRUCTION SPECIFICATION AND THE DRAWINGS, THE DRAWINGS SHALL GOVERN.
36. CONTRACTORS SHALL BE RESPONSIBLE FOR OBTAINING ALL PERMITS AND INSPECTIONS REQUIRED FOR CONSTRUCTION. IF CONTRACTOR CANNOT OBTAIN A PERMIT, THEY MUST NOTIFY THE GENERAL CONTRACTOR IMMEDIATELY.
37. CONTRACTOR SHALL REMOVE ALL TRASH AND DEBRIS FROM THE SITE ON A DAILY BASIS.
38. INFORMATION SHOWN ON THESE DRAWINGS WAS OBTAINED FROM SITE VISITS AND/OR DRAWINGS PROVIDED BY THE SITE OWNER. CONTRACTORS SHALL NOTIFY THE ENGINEER OF ANY DISCREPANCIES PRIOR TO ORDERING MATERIAL OR PROCEEDING WITH CONSTRUCTION.
39. NO WHITE STROBE LIGHTS ARE PERMITTED. LIGHTING IF REQUIRED, WILL MEET FAA STANDARDS AND REQUIREMENTS.
40. ALL COAXIAL CABLE INSTALLATIONS TO FOLLOW MANUFACTURER'S INSTRUCTIONS AND RECOMMENDATIONS.
41. CONTRACTOR TO ENSURE LOCATES ARE COMPLETED PRIOR TO DIGGING IN THE ROW. IF UTILITIES ARE INDICATED WITHIN 3 FEET OF THE PROPOSED ROUTE, OR IF CROSSING EXISTING UTILITY, CONTRACTOR TO POTHOLE EXISTING UTILITY TO DETERMINE DEPTH AND EXACT LOCATION PRIOR TO CONSTRUCTION. IF UTILITY IS DAMAGED DURING THE INSTALLATION OF THE NEW CONDUIT, IT SHALL BE THE CONTRACTORS RESPONSIBILITY TO CONTACT THE UTILITY IMMEDIATELY AND IT IS ALSO THE CONTRACTORS RESPONSIBILITY TO HAVE ANY DAMAGE FIXED AND/OR REPAIRED PRIOR TO CLOSING THE EXCAVATION.

GENERAL NOTES

EXOTHERMIC CONNECTION
MECHANICAL CONNECTION
CHEMICAL ELECTROLYTIC GROUNDING SYSTEM
TEST CHEMICAL ELECTROLYTIC GROUNDING SYSTEM
EXOTHERMIC WITH INSPECTION SLEEVE
GROUNDING BAR
GROUND ROD
TEST GROUND ROD WITH INSPECTION SLEEVE
SINGLE POLE SWITCH
DUPLEX RECEPTACLE
DUPLEX GFCI RECEPTACLE
FLUORESCENT LIGHTING FIXTURE (2) TWO LAMPS 48–T8
SMOKE DETECTION (DC)
EMERGENCY LIGHTING (DC)
SECURITY LIGHT W/PHOTOCELL LITHONIA ALXW LED–1–25A400/51K–SR4–120–PE–DDBTXD
CHAIN LINK FENCE
WOOD/WROUGHT IRON FENCE
WALL STRUCTURE
LEASE AREA
PROPERTY LINE (PL)
SETBACKS
ICE BRIDGE
CABLE TRAY
WATER LINE
UNDERGROUND POWER
UNDERGROUND TELCO
OVERHEAD POWER
OVERHEAD TELCO
UNDERGROUND TELCO/POWER
ABOVE GROUND POWER
ABOVE GROUND TELCO
ABOVE GROUND TELCO/POWER
ABOVE GROUND FIBER
ABOVE GROUND FIBER/POWER
UNDERGROUND FIBER
UNDERGROUND FIBER/POWER
UNDERGROUND DUCT
ABOVE GROUND POWER/AC
ABOVE GROND POWER/DC
SECTION REFERENCE
DETAIL REFERENCE
ELEVATION REFERENCE
BREAKLINE

LEGEND

AB	ANCHOR BOLT	INT	INTERIOR
ABV	ABOVE	LB(S)	POUND(S)
AC	ALTERNATING CURRENT	LF	
ADDL	ADDITIONAL	LTE	
AFF	ABOVE FINISHED FLOOR	MAS	
AFG	ABOVE FINISHED GRADE	MAX	
AIC	AMPERAGE INTERRUPTION CAPACITY	MB	
ALUM	ALUMINUM	MECH	
ALT	ALTERNATE	MFR	
ANT	ANTENNA	MGB	
APPROX	APPROXIMATE	MIN	
ARCH	ARCHITECTURAL	MISC	
ATS	AUTOMATIC TRANSFER SWITCH	MTL	METAL
AWG	AMERICAN WIRE GAUGE	MTS	MANUAL TRANSFER SWITCH
BATT	BATTERY	MW	MICROWAVE
BLDG	BUILDING	(N)	NEW
BLK	BLOCK	NEC	NATIONAL ELECTRIC CODE
BLKG	BLOCKING	NO.(#)	NUMBER
BM	BEAM	NTS	NOT TO SCALE
BTC	BARE TINNED COPPER CONDUCTOR	OC	ON CENTER
BOF	BOTTOM OF FOOTING	OPNG	OPENING
CAB	CABINET	(P)	PROPOSED
CANT	CANTILEVERED	P/C	PRECAST CONCRETE
CEC	CALIFORNIA ELECTRIC CODE	PCS	PERSONAL COMMUNICATION SERVICES
CHG	CHARGING	PCU	PRIMARY CONTROL UNIT
CLG	CEILING	PRC	PRIMARY RADIO CABINET
CLR	CLEAR	PP	POLARIZING PRESERVING
COL	COLUMN	PSF	POUNDS PER SQUARE FOOT
COMM	COMMON	PSI	POUNDS PER SQUARE INCH
CONC	CONCRETE	PT	PRESSURE TREATED
CONSTR	CONSTRUCTION	PWR	POWER CABINET
DBL	DOUBLE	QTY	QUANTITY
DC	DIRECT CURRENT	RAD	RADIUS
DEPT	DEPARTMENT	RECT	RECTIFIER
DF	DOUGLAS FIR	REF	REFERENCE
DIA	DIAMETER	REINF	REINFORCEMENT
DIAG	DIAGONAL	REQ'D	REQUIRED
DIM	DIMENSION	RET	REMOTE ELECTRIC TILT
DWG	DRAWING	RMC	RIGID METALLIC CONDUIT
DWL	DOWEL	RRH	REMOTE RADIO HEAD
(E)	EXISTING	RRU	REMOTE RADIO UNIT
EA	EACH	RWY	RACEWAY
EC	ELECTRICAL CONDUCTOR	SCH	SCHEDULE
EL	ELEVATION	SHT	SHEET
ELEC	ELECTRICAL	SIAD	SMART INTEGRATED DEVICE
EMT	ELECTRICAL METALLIC TUBING	SIM	SIMILAR
ENG	ENGINEER	SPEC	SPECIFICATION
EQ	EQUAL	SQ	SQUARE
EXP	EXPANSION	SS	STAINLESS STEEL
EXT	EXTERIOR	STD	STANDARD
FAB	FABRICATION	STL	STEEL
FF	FINISH FLOOR	STRUCT	STRUCTURAL
FG	FINISH GRADE	TEMP	TEMPORARY
FIF	FACILITY INTERFACE FRAME	THK	THICKNESS
FIN	FINISH(ED)	TMA	TOWER MOUNTED AMPLIFIER
FLR	FLOOR	TN	TOE NAIL
FDN	FOUNDATION	TOA	TOP OF ANTENNA
FOC	FACE OF CONCRETE	TOC	TOP OF CURB
FOM	FACE OF MASONRY	TOF	TOP OF FOUNDATION
FOS	FACE OF STUD	TOP	TOP OF PLATE (PARAPET)
FOW	FACE OF WALL	TOS	TOP OF STEEL
FS	FINISH SURFACE	TOW	TOP OF WALL
FT	FOOT	TVSS	TRANSIENT VOLTAGE SUPPRESSION SYSTEM
FTG	FOOTING	TYP	TYPICAL
GA	GAUGE	UG	UNDERGROUND
GEN	GENERATOR	UL	UNDERWRITERS LABORATORY
GFCI	GROUND FAULT CIRCUIT INTERRUPTER	UNO	UNLESS NOTED OTHERWISE
GLB	GLUE LAMINATED BEAM	UMTS	UNIVERSAL MOBILE TELECOMMUNICATIONS SYSTEM
GLV	GALVANIZED		
GPS	GLOBAL POSITIONING SYSTEM	UPS	UNITERRUPTIBLE POWER SYSTEM (DC POWER PLANT)
GND	GROUND		
GSM	GLOBAL SYSTEM FOR MOBILE		
HDR	HEADER	VIF	VERIFIED IN FIELD
HGR	HANGER	W	WIDE
HVAC	HEAT/VENTILATION/AIR CONDITIONING	W/	WITH
HT	HEIGHT	WD	WOOD
IGR	INTERIOR GROUND RING	W.P.	WORK POINT
IN	INCH	WP	WEATHERPROOF
		WT	WEIGHT

ABBREVIATIONS

AS-BUILT REDLINE
THE MARKUP ON THIS DRAWING REFLECTS THE AS BUILT INSTALLATION.
Subcontractor: Wecom Inc. Date: 12.31.19
Field Construction Date
Marking Contractor Shall Review Redline Drawings To Ensure Changes Do Not Alter Approved Design Intent And Are Code Compliant
Licensed Civil Engineer: Date 12.31.19

at&t
AT&T MOBILITY
10550 W. CHARLESTON
SUITE B
LAS VEGAS, NV 89135

BLACK & VEATCH
BLACK & VEATCH CORPORATION
8965 S EASTERN AVE
SUITE #325
LAS VEGAS, NV 89123

PROJECT NO:	129084.1514
DRAWN BY:	SBD
CHECKED BY:	GAC

REV	DATE	DESCRIPTION
0	06/04/19	ISSUED FOR CONSTRUCTION

PROFESSIONAL ENGINEER – STATE OF NEVADA
ERIC S. BRANDSTADTER
Exp. 12/31/20
CIVIL
No. 015916

IT IS A VIOLATION OF LAW FOR ANY PERSON, UNLESS THEY ARE ACTING UNDER THE DIRECTION OF A LICENSED PROFESSIONAL ENGINEER, TO ALTER THIS DOCUMENT.

NVL08228F_R03
ADJACENT TO
12126 ALTA DRIVE
LAS VEGAS, NV 89135
PICO SMALL CELL

SHEET TITLE
GENERAL NOTES, LEGEND AND ABBREVIATIONS

SHEET NUMBER
GN-1

PART 1 – GENERAL

1.1 GENERAL CONDITIONS:

A. CONTRACTOR SHALL INSPECT THE EXISTING SITE CONDITIONS PRIOR TO SUBMITTING BID. ANY QUESTIONS ARISING DURING THE BID PERIOD IN REGARDS TO THE SUBCONTRACTORS FUNCTIONS, THE SCOPE OF WORK, OR ANY OTHER ISSUE RELATED TO THIS PROJECT SHALL BE BROUGHT UP DURING THE BID PERIOD WITH THE PROJECT MANAGER FOR CLARIFICATION, NOT AFTER THE CONTRACT HAS BEEN AWARDED.

B. THE SUBCONTRACTOR SHALL OBTAIN PERMITS, LICENSES, MAKE ALL DEPOSITS, AND PAY ALL FEES REQUIRED FOR THE CONSTRUCTION PERFORMANCE FOR THE WORK UNDER THIS SECTION.

C. DRAWINGS SHOW THE GENERAL ARRANGEMENT OF ALL SYSTEMS AND COMPONENTS COVERED UNDER THIS SECTION. THE SUBCONTRACTOR SHALL VERIFY ALL DIMENSIONS. DRAWING SHALL NOT BE SCALED TO DETERMINE DIMENSIONS.

1.2 LAWS, REGULATIONS, ORDINANCES, STATUTES AND CODES.

A ALL WORK SHALL BE INSTALLED IN ACCORDANCE WITH THE 2013 EDITION OF THE CALIFORNIA ELECTRICAL CODE, AND ALL APPLICABLE LOCAL LAWS, REGULATIONS, ORDINANCES, STATUTES AND CODES. CONDUIT BENDS SHALL BE THE RADIUS BEND FOR THE TRADE SIZE OF CONDUIT IN COMPLIANCE WITH THE 2013 EDITION OF CEC.

1.3 REFERENCES:

A. THE PUBLICATIONS LISTED BELOW ARE PART OF THIS SPECIFICATION. EACH PUBLICATION SHALL BE THE LATEST REVISION AND ADDENDUM IN EFFECT ON THE DATE. THIS SPECIFICATION IS ISSUED FOR CONSTRUCTION UNLESS OTHERWISE NOTED. EXCEPT AS MODIFIED BY THE REQUIREMENT SPECIFIED HEREIN OR THE DETAILS OF THE DRAWINGS, WORK INCLUDED IN THIS SPECIFICATION SHALL CONFORM TO THE APPLICABLE PROVISION OF THESE PUBLICATIONS.

1. ANSI/IEEE (AMERICAN NATIONAL STANDARDS INSTITUTE)
2. ASTM (AMERICAN SOCIETY FOR TESTING AND MATERIALS)
3. ICE (INSULATED CABLE ENGINEERS ASSOCIATION)
4. NEMA (NATIONAL ELECTRICAL MANUFACTURER'S ASSOCIATION)
5. NFPA (NATIONAL FIRE PROTECTION ASSOCIATION)
6. OSHA (OCCUPATIONAL SAFETY AND HEALTH ADMINISTRATION)
7. UL (UNDERWRITERS LABORATORIES INC.)
8. AT&T GROUNDING AND BONDING STANDARDS TP-76416

1.4 SCOPE OF WORK:

A. WORK UNDER THIS SECTION SHALL CONSIST OF FURNISHING ALL LABOR, MATERIAL, AND ASSOCIATED SERVICES REQUIRED TO COMPLETE REQUIRED CONSTRUCTION AND BE OPERATIONAL.

B. ALL ELECTRICAL EQUIPMENT UNDER THIS CONTRACT SHALL BE PROPERLY TESTED, ADJUSTED, AND ALIGNED BY THE SUBCONTRACTOR

C. THE SUBCONTRACTOR SHALL BE RESPONSIBLE FOR ALL EXCAVATING, DRAINING, TRENCHES, BACKFILLING, AND REMOVAL OF EXCESS DIRT.

D. THE SUBCONTRACTOR SHALL FURNISH TO THE OWNER WITH CERTIFICATES OF A FINAL INSPECTION AND APPROVAL FROM THE INSPECTION AUTHORITIES HAVING JURISDICTION.

E. THE SUBCONTRACTOR SHALL PREPARE A COMPLETE SET OF AS-BUILT DRAWINGS, DOCUMENT ALL WIRING EQUIPMENT CONDITIONS, AND CHANGES WHILE COMPLETING THIS CONTRACT. THE AS-BUILT DRAWINGS SHALL BE SUBMITTED AT COMPLETION OF THE PROJECT.

PART 2 – PRODUCTS

2.1 GENERAL:

A. ALL MATERIALS AND EQUIPMENT SHALL BE UL LISTED, NEW, AND FREE FROM DEFECTS.

B. ALL ITEMS OF MATERIALS AND EQUIPMENT SHALL BE ACCEPTABLE TO THE AUTHORITY HAVING JURISDICTION AS SUITABLE FOR THE USE INTENDED.

C. ALL EQUIPMENT SHALL BEAR THE UNDERWRITERS LABORATORIES LABEL OF APPROVAL, AND SHALL CONFORM TO REQUIREMENT OF THE CALIFORNIA ELECTRICAL CODE.

D. ALL OVERCURRENT DEVICES SHALL HAVE AN INTERRUPTING CURRENT RATING EQUAL TO OR GREATER THAN THE SHORT CIRCUIT CURRENT TO WHICH THEY ARE SUBJECTED, 10,000 AIC MINIMUM. VERIFY AVAILABLE SHORT CIRCUIT CURRENT DOES NOT EXCEED THE RATING OF ELECTRICAL EQUIPMENT.

2.2 MATERIALS AND EQUIPMENT:

A. CONDUIT.

1. RIGID METAL CONDUIT (RMC) SHALL BE HOT-DIPPED GALVANIZED INSIDE AND OUTSIDE INCLUDING ENDS AND THREADS AND ENAMELED OR LACQUERED INSIDE IN ADDITION TO GALVANIZING.

2. LIQUIDTIGHT FLEXIBLE METAL CONDUIT SHALL BE UL LISTED

3. CONDUIT CLAMPS, STRAPS AND SUPPORTS SHALL BE STEEL OR MALLEABLE IRON ALL FITTINGS SHALL BE COMPRESSION AND CONCRETE TIGHT TYPE. GROUNDING BUSHINGS WITH INSULATED THROATS SHALL BE INSTALLED ON ALL CONDUIT TERMINATIONS.

4. NONMETALLIC CONDUIT AND FITTINGS SHALL BE SCHEDULE 40 PVC. INSTALL USING SOLVENT-CEMENT-TYPE JOINTS AS RECOMMENDED BY THE MANUFACTURER.

B. CONDUCTORS AND CABLE:

1. CONDUCTORS AND CABLE SHALL BE FLAME-RETARDANT, MOISTURE AND HEAT RESISTANT THERMOPLASTIC, SINGLE CONDUCTOR, COPPER, TYPE THHN/THWN-2, 600 VOLT, SIZE AS INDICATED, #12 AWG SHALL BE THE MINIMUM SIZE CONDUCTOR USED.

2. #10 AWG AND SMALLER CONDUCTOR SHALL BE SOLID OR STRANDED AND #8 AWG AND LARGER CONDUCTORS SHALL BE STRANDED.

3. SOLDERLESS, COMPRESSION-TYPE CONNECTORS SHALL BE USED FOR TERMINATION OF ALL STRANDED CONDUCTORS.

4. STRAIN-RELIEF SUPPORTS GRIPS SHALL BE HUBBELL KELLEMS OR APPROVED EQUAL. CABLES SHALL BE SUPPORTED IN ACCORDANCE WITH THE NEC AND CABLE MANUFACTURER'S RECOMMENDATIONS.

5 ALL CONDUCTORS SHALL BE TAGGED AT BOTH ENDS OF THE CONDUCTOR, AT ALL PULL BOXES, J-BOXES, EQUIPMENT AND CABINETS AND SHALL BE IDENTIFIED WITH APPROVED PLASTIC TAGS (ACTION CRAFT, BRADY, OR APPROVED EQUAL).

C. DISCONNECT SWITCHES:

1. DISCONNECT SWITCHES SHALL BE HEAVY DUTY, DEAD-FRONT, QUICK-MAKE, QUICK-BREAK, EXTERNALLY OPERABLE, HANDLE LOCKABLE AND INTERLOCK WITH COVER IN CLOSED POSITION, RATING AS INDICATED, UL LABELED FURNISHED IN NEMA 3R ENCLOSURE, SQUARE-D OR ENGINEERED APPROVED EQUAL.

D. CHEMICAL ELECTROLYTIC GROUNDING SYSTEM:

1. INSTALL CHEMICAL GROUNDING AS REQUIRED. THE SYSTEM SHALL BE ELECTROLYTIC MAINTENANCE FREE ELECTRODE CONSISTING OF RODS WITH A MINIMUM #2 AWG CU EXOTHERMALLY WELDED PIGTAIL, PROTECTIVE BOXES, AND BACKFILL MATERIAL. MANUFACTURER SHALL BE LYNCOLE XIT GROUNDING ROD TYPES K2-(*)CS OR K2L-(*)CS. (*) 10' OR 20' AS AVAILABLE FROM MANUFACTURER, BUT NOT LESS THAN 8' MIN [REQUIRED PER CEC 250.52 A (5)].

2. GROUND ACCESS BOX SHALL BE A POLYPLASTIC BOX FOR NON-TRAFFIC APPLICATIONS, INCLUDING BOLT DOWN FLUSH COVER WITH "BREATHER" HOLES, XIT MODEL #XB-22. ALL DISCONNECT SWITCHES AND CONTROLLING DEVICES SHALL BE PROVIDED WITH ENGRAVED LAMICOID NAMEPLATES INDICATING EQUIPMENT CONTROLLED, BRANCH CIRCUITS ID NUMBERING, AND THE ELECTRICAL POWER SOURCE.

3. BACKFILL MATERIAL SHALL BE LYNCONITE AND LYNCOLE GROUNDING GRAVEL.

E. SYSTEM GROUNDING:

1. ALL GROUNDING COMPONENTS SHALL BE TINNED AND GROUNDING CONDUCTOR SHALL BE #2 AWG BARE, SOLID, TINNED, COPPER. ABOVE GRADE GROUNDING CONDUCTORS SHALL BE INSULATED WHERE NOTED.

2. GROUNDING BUSES SHALL BE BARE, TINNED, ANNEALED COPPER BARS OF RECTANGULAR CROSS SECTION. STANDARD BUS BARS MGB, SHALL BE FURNISHED AND INSTALLED BY THE SUBCONTRACTOR. THEY SHALL NOT BE FABRICATED OR MODIFIED IN THE FIELD. ALL GROUNDING BUSES SHALL BE IDENTIFIED WITH MINIMUM 3/4" LETTERS BY WAY OF STENCILING OR DESIGNATION PLATE.

3. CONNECTORS SHALL BE HIGH-CONDUCTIVITY, HEAVY DUTY, LISTED AND LABELED AS GROUNDING CONNECTORS FOR THE MATERIALS USED. USE TWO-HOLE COMPRESSION LUGS WITH HEAT SHRINK FOR MECHANICAL CONNECTIONS. INTERIOR CONNECTIONS USE TWO-HOLE COMPRESSION LUGS WITH INSPECTION WINDOW AND CLEAR HEAT SHRINK.

4. EXOTHERMIC WELDED CONNECTIONS SHALL BE PROVIDED IN KIT FORM AND SELECTED FOR THE SPECIFIC TYPES, SIZES, AND COMBINATIONS OF CONDUCTORS AND OTHER ITEMS TO BE CONNECTED.

5. GROUND RODS SHALL BE COPPER-CLAD STEEL WITH HIGH-STRENGTH STEEL CORE AND ELECTROLYTIC-GRADE COPPER OUTER SHEATH, MOLTEN WELDED TO CORE, 5/8"x10'-0". ALL GROUNDING RODS SHALL BE INSTALLED WITH INSPECTION SLEEVES.

6. INSTALL AN EQUIPMENT GROUNDING CONDUCTOR IN ALL CONDUITS IN COMPLIANCE WITH THE AT&T SPECIFICATIONS AND CEC. THE EQUIPMENT GROUNDING CONDUCTORS SHALL BE BONDED AT ALL JUNCTION BOXES, PULLBOXES, DISCONNECT SWITCHES, STARTERS, AND EQUIPMENT CABINETS.

F. OTHER MATERIALS:

1. THE SUBCONTRACTOR SHALL PROVIDE OTHER MATERIALS, THOUGH NOT SPECIFICALLY DESCRIBED, WHICH ARE REQUIRED FOR A COMPLETELY OPERATIONAL SYSTEM AND PROPER INSTALLATION OF THE WORK

2. PROVIDE PULL BOXES AND JUNCTION BOXES WHERE SHOWN OR REQUIRED BY CEC.

G. PANELS AND LOAD CENTERS:

1. ALL PANEL DIRECTORIES SHALL BE TYPEWRITTEN.

PART 3 – EXECUTION

3.1 GENERAL:

A. ALL MATERIAL AND EQUIPMENT SHALL BE INSTALLED IN STRICT ACCORDANCE WITH THE MANUFACTURER'S RECOMMENDATIONS AND AS SHOWN ON DSA APPROVED DWG'S.

B. EQUIPMENT SHALL BE TIGHTLY COVERED AND PROTECTED AGAINST DIRT OR WATER, AND AGAINST CHEMICAL OR MECHANICAL INJURY DURING INSTALLATION AND CONSTRUCTION PERIODS.

3.2 LABOR AND WORKMANSHIP:

A. ALL LABOR FOR THE INSTALLATION OF MATERIALS AND EQUIPMENT FURNISHED FOR THE ELECTRICAL SYSTEM SHALL BE INSTALLED BY EXPERIENCED WIREMEN, IN A NEAT AND WORKMAN-LIKE MANNER.

B. ALL ELECTRICAL EQUIPMENT SHALL BE ADJUSTED, ALIGNED AND TESTED BY THE SUBCONTRACTOR AS REQUIRED TO PRODUCE THE INTENDED PERFORMANCE.

C. UPON COMPLETION OF WORK, THE SUBCONTRACTOR SHALL THOROUGHLY CLEAN ALL EXPOSED EQUIPMENT, REMOVE ALL LABELS AND ANY DEBRIS, CRATING OR CARTONS AND LEAVE THE INSTALLATION FINISHED AND READY FOR OPERATION.

3.3 COORDINATION:

A. THE SUBCONTRACTOR SHALL COORDINATE THE INSTALLATION OF ELECTRICAL ITEMS WITH THE OWNER-FURNISHED EQUIPMENT DELIVERY SCHEDULE TO PREVENT UNNECESSARY DELAYS IN THE TOTAL WORK.

3.4 INSTALLATION:

A. CONDUIT:

1. ALL ELECTRICAL WIRING SHALL BE INSTALLED IN CONDUIT AS SPECIFIED. NO CONDUIT OR TUBING OF LESS THAN 3/4 INCH TRADE SIZE.

2. PROVIDE RIGID PVC SCHEDULE 80 CONDUITS FOR ALL RISERS, RMC OTHERWISE NOTED. EMT MAY BE INSTALLED FOR EXTERIOR CONDUITS WHERE NOT SUBJECT TO PHYSICAL DAMAGE.

3. THE INSTALLATION OF SCHEDULE 40 PVC AND RMC CONDUITS SHALL BE 24 INCHES MINIMUM DEPTH. ALL 90 DEGREE BENDS SHALL BE RMC. EXPANSION JOINTS ARE REQUIRED ON ALL CONDUIT RISERS.

4. USE GALVANIZED FLEXIBLE STEEL CONDUIT WHERE DIRECT CONNECTION TO EQUIPMENT WITH MOVEMENT, VIBRATION, OR FOR EASE OF MAINTENANCE. USE LIQUID TIGHT, FLEXIBLE METAL CONDUIT FOR OUTDOOR APPLICATIONS. INSTALL GALVANIZED FLEXIBLE STEEL CONDUIT AT ALL POINTS OF CONNECTION TO EQUIPMENT MOUNTED ON SUPPORT TO ALLOW FOR EXPANSION AND CONTRACTION.

5. A RUN OF CONDUIT BETWEEN BOXES OR EQUIPMENT SHALL NOT CONTAIN MORE THAN THE EQUIVALENT OF THREE QUARTER-BENDS. CONDUIT BEND SHALL BE MADE WITH THE UL LISTED BENDER OR FACTORY 90 DEGREE ELBOWS MAY BE USED.

6. FIELD FABRICATED CONDUITS SHALL BE CUT SQUARE WITH A CONDUIT CUTTING TOOL AND REAMED TO PROVIDE A SMOOTH INSIDE SURFACE.

7. PROVIDE INSULATED GROUNDING BUSHING FOR ALL CONDUITS.

8. SUBCONTRACTOR IS RESPONSIBLE FOR PROTECTING ALL CONDUITS DURING CONSTRUCTION. TEMPORARY OPENINGS IN THE CONDUIT SYSTEM SHALL BE PLUGGED OR CAPPED TO PREVENT ENTRANCE OF MOISTURE OR FOREIGN MATTER. SUBCONTRACTOR SHALL REPLACE ANY CONDUITS CONTAINING FOREIGN MATERIALS THAT CANNOT BE REMOVED.

9. ALL CONDUITS SHALL BE SWABBED CLEAN BY PULLING AN APPROPRIATE SIZE MANDREL THROUGH THE CONDUIT BEFORE INSTALLATION OF CONDUCTORS OR CABLES. CONDUIT SHALL BE FREE OF DIRT AND DEBRIS.

10. INSTALL PULL STRINGS IN ALL CLEAN EMPTY CONDUITS. IDENTIFY PULL STRINGS AT EACH END.

11. INSTALL 2" HIGHLY VISIBLE AND DETECTABLE TAPE 12" ABOVE ALL UNDERGROUND CONDUITS AND CONDUCTORS.

12. CONDUITS SHALL BE INSTALLED IN SUCH A MANNER AS TO INSURE AGAINST COLLECTION OF TRAPPED CONDENSATION.

13. PROVIDE CORE DRILLING AS NECESSARY FOR PENETRATIONS TO ALLOW FOR RACEWAYS AND CABLES TO BE ROUTED THROUGH THE BUILDING. DO NOT PENETRATE STRUCTURAL MEMBERS UNLESS SPECIFICALLY SHOWN ON DSA APPROVED DWG'S. ANY CORING/CUTTING REQUIRED TO COMPLETE THE WORK, BUT NOT SHOWN ON DSA APPROVED DWG'S SHALL BE SUBJECT TO DSA REVIEW AND APPROVAL PRIOR TO BEGINNING ON SUCH WORK. SLEEVES AND/OR PENETRATION SHALL BE EFFECTIVELY SEALED WITH FIRE RATED MATERIAL WHICH SHALL MAINTAIN THE FIRE RATING OF THE WALL OR STRUCTURE. FIRE STOPS AT FLOOR PENETRATIONS SHALL PREVENT PASSAGE OF WATER, SMOKE, FIRE, AND FUMES. ALL MATERIAL SHALL BE UL APPROVED FOR THIS PURPOSE.

B. CONDUCTORS AND CABLE:

1. ALL POWER WIRING SHALL BE COLOR CODED AS FOLLOWS:

DESCRIPTION	208/240/120 VOLT SYSTEMS
PHASE A	BLACK
PHASE B	RED
PHASE C	BLUE
NEUTRAL	WHITE
GROUNDING	GREEN

2. SPLICES SHALL BE MADE ONLY AT OUTLETS, JUNCTION BOXES OR EQUIPMENT TO PERMIT MAKING A NEAT ARRANGEMENT APPROVED FOR THIS PURPOSE.

3. PULLING LUBRICANTS SHALL BE UL APPROVED SUBCONTRACTOR SHALL PROVIDE PULLING EQUIPMENT FOR PULLING CONDUCTOR OR CABLES INTO THE CONDUIT.

4. CABLES SHALL BE NEATLY TRAINED, WITHOUT INTERLACING AND PROVIDED WITH SUPPORT IN JUNCTION BOXES & EQUIPMENT TO PERMIT MAKING A NEAT ARRANGEMENT. CONDUCTORS SHALL BE PROTECTED IN A NEAT MANNER TO AVOID TENSION ON CONDUCTORS OR TERMINALS. CONDUCTORS SHALL BE PROTECTED FROM MECHANICAL INJURY AND MOISTURE. SHARP BENDS OVER CONDUIT BUSHINGS IS PROHIBITED DAMAGED CABLES SHALL BE REMOVED AND REPLACED AT THE SUBCONTRACTOR'S EXPENSE.

AS-BUILT REDLINE

THE MARKUP FOR THIS DRAWING REFLECTS THE AS BUILT INSTALLATION

Subcontractor: Wecom Inc.	Date: 12.31.19
Field Construction Manager	Date
Project Engineer: Shall review the field changes for accuracy and code compliance	
Project Engineer: Patrick Fleming	Date: 12.31.19

C. DISCONNECT SWITCHES:

1. INSTALL DISCONNECT SWITCHES LEVEL AND PLUMB. CONNECT TO WIRING SYSTEM AND GROUNDING SYSTEM AS INDICATED.

D. GROUNDING:

1. ALL METALLIC PARTS OF ELECTRICAL EQUIPMENT WHICH DO NOT CARRY CURRENT SHALL BE GROUNDED IN ACCORDANCE WITH THE REQUIREMENTS OF THE BUILDING MANUFACTURER, AT&T GROUNDING AND BONDING STANDARDS TP-76416, ND-00135, AND THE CALIFORNIA ELECTRICAL CODE (2013 CEC EDITION).

2. PROVIDE ELECTRICAL GROUNDING AND BONDING SYSTEM INDICATED WITH ASSEMBLY OF MATERIALS, INCLUDING GROUNDING ELECTRODES, BONDING JUMPERS AND ADDITIONAL ACCESSORIES AS REQUIRED FOR A COMPLETE INSTALLATION.

3. ALL GROUNDING CONDUCTORS SHALL PROVIDE A STRAIGHT DOWNWARD PATH TO GROUND WITH GRADUAL BEND AS REQUIRED. GROUNDING CONDUCTORS SHALL NOT BE LOOPED OR SHARPLY BENT ROUTE GROUNDING CONNECTIONS AND CONDUCTORS TO GROUND IN THE SHORTEST AND STRAIGHTEST PATHS POSSIBLE TO MINIMIZE TRANSIENT VOLTAGE RISES.

4. BUILDINGS AND/OR NEW TOWERS GREATER THAN 75 FEET IN HEIGHT AND WHERE THE MAIN GROUNDING CONDUCTORS ARE REQUIRED TO BE ROUTED TO GRADE, THE SUBCONTRACTOR SHALL ROUTE TWO GROUNDING CONDUCTORS FROM THE ROOFTOP, TOWERS, AND WATER TOWERS GROUNDING RING, TO THE EXISTING GROUNDING SYSTEM, THE GROUNDING CONDUCTORS SHALL NOT BE SMALLER THAN 2/0 AWG COPPER ROOFTOP GROUNDING RING SHALL BE BONDED TO THE EXISTING GROUNDING SYSTEM, THE BUILDING STEEL COLUMNS, LIGHTNING PROTECTION SYSTEM, AND BUILDING MAIN WATER LINE (FERROUS OR NONFERROUS METAL PIPING ONLY). SEE STANDARD 6.3.2.2.

5. TIGHTEN GROUNDING AND BONDING CONNECTORS, INCLUDING SCREWS AND BOLTS, IN ACCORDANCE WITH MANUFACTURER'S PUBLISHED TORQUE TIGHTENING VALUES FOR CONNECTORS AND BOLTS. WHERE MANUFACTURER'S TORQUING REQUIREMENTS ARE NOT AVAILABLE, TIGHTEN CONNECTIONS TO COMPLY WITH TIGHTENING TORQUE VALUES SPECIFIED IN UL TO ASSURE PERMANENT AND EFFECTIVE GROUNDING.

6. SUBCONTRACTOR SHALL VERIFY THE LOCATIONS OF GROUNDING TIE-IN-POINTS TO THE EXISTING GROUNDING SYSTEM. ALL UNDERGROUND GROUNDING CONNECTIONS SHALL BE MADE BY THE EXOTHERMIC WELD PROCESS AND INSTALLED IN ACCORDANCE WITH THE MANUFACTURER'S INSTRUCTIONS.

7. ALL GROUNDING CONNECTIONS SHALL BE INSPECTED FOR TIGHTNESS. EXOTHERMIC WELDED CONNECTIONS SHALL BE APPROVED BY THE INSPECTOR HAVING JURISDICTION BEFORE BEING PERMANENTLY CONCEALED.

8. APPLY CORROSION-RESISTANCE FINISH TO FIELD CONNECTIONS AND PLACES WHERE FACTORY APPLIED PROTECTIVE COATINGS HAVE BEEN DESTROYED. USE KOPR-SHIELD ANTI-OXIDATION COMPOUND ON ALL COMPRESSION GROUNDING CONNECTIONS.

9. A SEPARATE, CONTINUOUS, INSULATED EQUIPMENT GROUNDING CONDUCTOR SHALL BE INSTALLED IN ALL FEEDER AND BRANCH CIRCUITS

10. BOND ALL INSULATED GROUNDING BUSHINGS WITH A BARE 6 AWG GROUNDING CONDUCTOR TO A GROUND BUS.

11. DIRECT BURIED GROUNDING CONDUCTORS SHALL BE INSTALLED AT A NOMINAL DEPTH OF 36" MINIMUM BELOW GRADE, OR 6" BELOW THE FROST LINE, USE THE GREATER OF THE TWO DISTANCES.

12. ALL GROUNDING CONDUCTORS EMBEDDED IN OR PENETRATING CONCRETE SHALL BE INSTALLED IN SCHEDULE 40 PVC CONDUIT.

13. THE INSTALLATION OF CHEMICAL ELECTROLYTIC GROUNDING SYSTEM IN STRICT ACCORDANCE WITH MANUFACTURER'S INSTRUCTIONS. REMOVE SEALING TAPE FROM LEACHING AND BREATHER HOLES. INSTALL PROTECTIVE BOX FLUSH WITH GRADE.

14. DRIVE GROUND RODS UNTIL TOPS ARE A MINIMUM DISTANCE OF 36" DEPTH OR 6" BELOW FROST LINE, USING THE GREATER OF THE TWO DISTANCES.

15. IF COAX ON THE ICE BRIDGE IS MORE THAN 6 FT. FROM THE GROUNDING BAR AT THE BASE OF THE TOWER, A SECOND GROUNDING BAR WILL BE NEEDED AT THE END OF THE ICE BRIDGE, TO GROUND THE COAX CABLE GROUNDING KITS AND IN-LINE ARRESTORS

16 SUBCONTRACTOR SHALL REPAIR, AND/OR REPLACE, EXISTING GROUNDING SYSTEM COMPONENTS DAMAGED DURING CONSTRUCTION AT THE SUBCONTRACTORS EXPENSE.

3.5 ACCEPTANCE TESTING:

A. CERTIFIED PERSONNEL USING CERTIFIED EQUIPMENT SHALL PERFORM REQUIRED TESTS AND SUBMIT WRITTEN TEST REPORTS UPON COMPLETION.

B. WHEN MATERIAL AND/OR WORKMANSHIP IS FOUND NOT TO COMPLY WITH THE SPECIFIED REQUIREMENTS, THE NON-COMPLYING ITEMS SHALL BE REMOVED FROM THE PROJECT SITE AND REPLACED WITH ITEMS COMPLYING WITH THE SPECIFIED REQUIREMENTS PROMPTLY AFTER RECEIPT OF NOTICE FOR NON-COMPLIANCE.

C. TEST PROCEDURES;

1. ALL FEEDERS SHALL HAVE INSULATION TESTED AFTER INSTALLATION, BEFORE CONNECTION TO DEVICES. THE CONDUCTORS SHALL TEST FREE FROM SHORT CIRCUITS AND GROUNDS. TESTING SHALL BE FOR ONE MINUTE USING 1000V DC. PROVIDE WRITTEN DOCUMENTATION FOR ALL TEST RESULTS.

2. PRIOR TO ENERGIZING CIRCUITRY, TEST WIRING DEVICES FOR ELECTRICAL CONTINUITY AND PROPER POLARITY CONNECTIONS.

3. MEASURE AND RECORD VOLTAGES BETWEEN PHASES AND BETWEEN PHASE CONDUCTORS AND NEUTRALS. SUBMIT A REPORT OF MAXIMUM AND MINIMUM VOLTAGES

4. PERFORM GROUNDING TEST TO MEASURE GROUNDING RESISTANCE OF GROUNDING SYSTEM USING THE IEEE STANDARD 3-POINT "FALL-OF-POTENTIAL" METHOD. PROVIDE PLOTTED TEST VALUES AND LOCATION SKETCH. NOTIFY THE ENGINEER IMMEDIATELY IF MEASURED VALUE IS OVER 5 OHMS.

GENERAL ELECTRICAL NOTES

at&t

AT&T MOBILITY
10550 W. CHARLESTON
SUITE B
LAS VEGAS, NV 89135

BLACK & VEATCH

BLACK & VEATCH CORPORATION
8965 S EASTERN AVE
SUITE #325
LAS VEGAS, NV 89123

PROJECT NO:	129084.1514
DRAWN BY:	SBD
CHECKED BY:	GAC

REV	DATE	DESCRIPTION
0	06/04/19	ISSUED FOR CONSTRUCTION

PROFESSIONAL ENGINEER – STATE OF NEVADA
ERIC S. BRANDSTADTER
Exp. 12/31/20
No. 015[illegible]
12/31/19

IT IS A VIOLATION OF LAW FOR ANY PERSON, UNLESS THEY ARE ACTING UNDER THE DIRECTION OF A LICENSED PROFESSIONAL ENGINEER, TO ALTER THIS DOCUMENT.

NVL08228F_R03
ADJACENT TO
12126 ALTA DRIVE
LAS VEGAS, NV 89135
PICO SMALL CELL

SHEET TITLE

GENERAL NOTES

SHEET NUMBER

GN-2

STRUCTURAL STEEL NOTES

1. DESIGN, FABRICATION, ERECTION, ALTERATION AND MAINTENANCE SHALL CONFORM TO THE FOLLOWING, UNLESS NOTED OTHERWISE (UNO).
   A. TIA-222: STRUCTURAL STANDARD FOR ANTENNA SUPPORTING STRUCTURES AND ANTENNAS
   B TIA-1019-A, INSTALLATION, ALTERATION, AND MAINTENANCE OF ANTENNA SUPPORTING STRUCTURES AND ANTENNAS
   C. AISC: MANUAL OF STEEL CONSTRUCTION
2. ALL STRUCTURAL ELEMENTS SHALL CONFORM TO THE FOLLOWING REQUIREMENTS, UNO.
   A. STRUCTURAL STEEL, ASTM A572 GRADE 65 (FY = 65 KSI).
   B. ALL BOLTS, ASTM A325 TYPE 1 GALVANIZED HIGH STRENGTH BOLTS.
   C. ALL NUTS, ASTM A563 CARBON AND ALLOY STEEL NUTS.
   D. ALL WASHERS, ASTM F436 HARDENED STEEL WASHERS.
3. ALL HOLES SHALL BE CUT WITH A GRINDER OR DRILLED. HOLES SHALL NOT BE FLAME CUT THRU STEEL UNLESS APPROVED BY THE ENGINEER OF RECORD.
4. ALL FASTENERS SHALL NOT BE REUSED.
5. A NUT LOCKING DEVICE SHALL BE INSTALLED ON ALL PROPOSED AND/OR REPLACED ASTM A325 BOLTS
6. ALL PROPOSED AND/OR REPLACED BOLTS SHALL BE OF SUFFICIENT LENGTH SUCH THAT THE END OF THE BOLT BE AT LEAST FLUSH WITH THE FACE OF THE NUT. IT IS NOT PERMITTED FOR THE BOLT END TO BE BELOW THE FACE OF THE NUT AFTER TIGHTENING IS COMPLETED.
7. HOT-DIP GALVANIZE ALL ITEMS, UNO.
   GALVANIZE PER ASTM A123, ASTM A153/A153M OR ASTM A653 G90, AS APPLICABLE.
8. AFTER FINAL INSPECTION, ALL EXPOSED STRUCTURAL STEEL AS THE RESULT OF THIS SCOPE OF WORK INCLUDING WELDS, FIELD DRILLED HOLES, AND SHAFT INTERIORS (WHERE ACCESSIBLE), SHALL BE CLEANED AND COLD GALVANIZING APPLIED BY BRUSH. PHOTO DOCUMENTATION IS REQUIRED TO BE SUBMITTED TO THE INSPECTOR.

WELDING NOTES

1. ALL WELDING SHALL BE IN ACCORDANCE WITH THE AWS D1.1/D1.1M, "STRUCTURAL WELDING CODE-STEEL".
2. ALL WELDING SHALL BE PERFORMED BY AWS CERTIFIED WELDERS.
3. ALL ARC WELDING ON STRUCTURES SHALL BE DONE IN ACCORDANCE WITH AWS D1.1 (LATEST EDITION). THIS SHALL INCLUDE A CERTIFIED WELDING INSPECTOR (CWI) FOR ACCEPTANCE OR REJECTION OF ALL WELDING OPERATIONS, PRE-DURING-POST, USING THE ACCEPTANCE CRITERIA OF AWS D1.1. THE CWI SHALL WORK WITH THE GC ON THE LEVEL OF INTERACTION NEEDED TO CONDUCT THE WELDING INSPECTION. THE CERTIFIED WELDING INSPECTION IS THE RESPONSIBILITY OF THE GC.
4. FOR ALL WELDING, USE E80XX ELECTRODES FOR SMAW PROCESS AND E8XT-XX ELECTRODES FOR FCAW PROCESS, UNO.
5. SURFACES TO BE WELDED SHALL BE FREE FROM SCALE, SLAG, RUST, MOISTURE, GREASE OR ANY OTHER FOREIGN MATERIAL THAT WOULD PREVENT PROPER WELDING. GRIND THE SURFACE ADJACENT TO THE WELD FOR A DISTANCE OF 2" MINIMUM ALL AROUND. ENSURE BOTH AREAS ARE 100% FREE OF ALL GALVANIZING.
6. REPAIR THE GALVANIZED COATING. ALL AREAS AFFECTED BY THE FIELD DRILLING, FIELD GRINDING AND FIELD WELDING, BOTH INSIDE AND OUTSIDE THE MONOPOLE, SHALL BE REPAIRED. PRODUCTS TO BE APPLIED IN STRICT ACCORDANCE WITH MANUFACTURER'S RECOMMENDATIONS. AREAS THAT HAVE BEEN TOUCHED UP SHOULD BE INSPECTED AS PART OF THE ROUTINE MAINTENANCE OF THE STRUCTURE. NO SPRAY PAINT IS ALLOWED. AFTER ZINC-RICH PAINT IS DRY, OVERCOAT WITH OWNER'S PAINT SPECIFICATIONS, APPLIED IN STRICT ACCORDANCE WITH THE MANUFACTURER'S RECOMMENDATIONS.
7. DO NOT WELD IF THE TEMPERATURE OF THE STEEL IN THE VICINITY OF THE WELD AREA IS BELOW 0° F. WHEN THE TEMPERATURE IS BETWEEN 0° F AND 32° F, PREHEAT AND MAINTAIN THE STEEL IN THE VICINITY OF THE WELD AREA AT 70° F DURING THE WELDING PROCESS.
8. DO NOT WELD ON WET OR FROST-COVERED SURFACES & PROVIDE ADEQUATE PROTECTION FROM HIGH WINDS.
9. MOVE ALL COAX AND OTHER FLAMMABLE MATERIALS FROM ANY AREA THAT MAY BE HEATED DURING CONSTRUCTION.
10. CONTRACTOR SHALL MAKE PROPER PRECAUTIONS AND PROCEDURES TO PROTECT THE STRUCTURE FROM CATCHING FIRE DURING ALL WELDING OPERATIONS. THE FOLLOWING FIRE SAFETY PREVENTION PROTOCOL IS THE MINIMUM REQUIREMENTS DURING WELDING OPERATIONS.
    - 500 GALLON WATER TANK WITH PUMP TO BE ON SITE AT ALL TIMES.
    - 2 FIRE EXTINGUISHERS ON SITE AT ALL TIMES.
    - 2 MAN FIRE WATCH ON ANY ADJACENT STRUCTURES, FIELDS AND POLE.
    - INTERMITTENT COOLING OF WELDED SURFACE TO REDUCE HEAT IN STRUCTURE.

CLARK COUNTY NV STORMWATER BMP NOTES:

1. THE OWNER, SITE DEVELOPER, CONTRACTOR, AND/OR THEIR AUTHORIZED AGENTS SHALL EACH DAY REMOVE ALL SEDIMENT, MUD, CONSTRUCTION DEBRIS, OR OTHER POTENTIAL POLLUTANTS THAT MAY HAVE BEEN DISCHARGED TO, OR ACCUMULATED IN, THE PUBLIC RIGHTS OF WAY OF CLARK COUNTY AS A RESULT OF CONSTRUCTION ACTIVITIES ASSOCIATED WITH THIS SITE DEVELOPMENT OR CONSTRUCTION PROJECT. SUCH MATERIALS SHALL BE PREVENTED FROM ENTERING THE STORM SEWER SYSTEM.
2. ADDITIONAL CONSTRUCTION SITE DISCHARGE BEST MANAGEMENT PRACTICES MAY BE REQUIRED OF THE OWNER AND HIS OR HER AGENTS DUE TO UNFORESEEN EROSION PROBLEMS OR IF THE SUBMITTED PLAN DOES NOT MEET THE PERFORMANCE STANDARDS SPECIFIED IN THE LAS VEGAS VALLEY CONSTRUCTION SITE BMP GUIDANCE MANUAL.
3. AT A MINIMUM, THE CONTRACTOR OR HIS AGENT SHALL INSPECT ALL DISTURBED AREAS, AREAS USED FOR STORAGE OF MATERIALS AND EQUIPMENT THAT ARE EXPOSED TO PRECIPITATION, VEHICLE ENTRANCE AND EXIT LOCATIONS, AND ALL BMPS WEEKLY, AND WITHIN 24 HOURS AFTER ANY RAIN EVENT OF 0.5 INCHES OR MORE. THE CONTRACTOR OR HIS AGENT SHALL UPDATE OR MODIFY THE STORMWATER POLLUTION PREVENTION PLAN AS NECESSARY. SOME EXCEPTIONS TO WEEKLY INSPECTIONS MAY APPLY, SUCH AS SUSPENSION OF LAND DISTURBANCE ACTIVITIES. REFER TO THE NEVADA STORMWATER GENERAL PERMIT FOR CONSTRUCTION ACTIVITY NVR100000, SECTION III.A.12.
4. ACCUMULATED SEDIMENT IN BMPS SHALL BE REMOVED WITHIN SEVEN DAYS AFTER A STORMWATER RUNOFF EVENT OR PRIOR TO THE NEXT ANTICIPATED STORM EVENT, WHICHEVER IS EARLIER. SEDIMENT MUST BE REMOVED WHEN BMP DESIGN CAPACITY HAS BEEN REDUCED BY 50 PERCENT OR MORE.
5. BMP'S TO BE IMPLEMENTED INCLUDE BUT ARE NOT LIMITED TO:
   A. MINIMIZE DISTURBED AREA AND PROTECT NATURAL FEATURES AND SOIL
   B. CONTROLLING STORMWATER FLOWING ONTO AND THROUGH THE PROJECT VIA THE USE OF SEDIMENT BERMS AND STRAW WADDLES AS APPROPRIATE
   C. STABILIZING SOILS THROUGH SITE RESTORATION AT COMPLETION OF PROJECT
   D. PROTECTING STORM DRAIN INLETS VIA THE USE OF SAND BAGS, STRAW WADDLES AND FILTER FABRIC AS APPROPRIATE
6. BMP'S MUST BE IN PLACE WHEN SOILS ARE EXPOSED (NO WAITING PERIODS)

CLARK COUNTY NV PUBLIC WORKS DEVELOPMENT NOTES

1. STRUCTURAL DESIGN ACCEPTANCE IS VALID ONLY FOR POLE FOUNDATIONS INSTALLED ON LEVELED SURFACES. ANY FOUNDATION INSTALLED WITHIN (5FT) FROM A SLOPE WILL REQUIRE SLOPE STABILITY ANALYSIS AND CALCULATIONS WITH A SEPARATE STRUCTURAL REVIEW AND FEE. GEOTECHNICAL WILL BE NEEDED FOR THE REVIEW.
2. SIDEWALKS MUST BE UNOBSTRUCTED AND HAVE AN ACCESS OF AT LEAST 3.0-FT FROM BACK OF CURB.

SPECIAL INSPECTIONS REQUIRED

PERFORM THIRD PARTY SPECIAL INSPECTION FOR (STREET LIGHT FOUNDATION...).SPECIAL INSPECTION IS REQUIRED.

1. INSPECTIONS SHALL BE PERFORMED BY AN ICC CERTIFIED INSPECTOR APPROVED BY CLARK COUNTY; EMPLOYED BY THE OWNER/DEVELOPER.
2. PROVIDE SPECIAL INSPECTIONS IN ACCORDANCE WITH THE 2012 INTERNATIONAL BUILDING CODE FOR THE ITEMS LISTED BELOW.
   A. MASONRY- PERIODIC
   B. REINFORCING STEEL PLACEMENT- PERIODIC
   C. GROUT-CONTINUOUS
   D. CONCRETE PLACEMENT-CONTINUOUS
   E. CONCRETE STRENGTH- CONTINUOUS
   F. EPOXY FASTENED DOWELS AND ANCHORS-PERIODIC
   G. .....
3. THE INSPECTOR SHALL SUBMIT A STATEMENT TO THE OWNER/DEVELOPER, AND STRUCTURAL ENGINEER INDICATING COMPLIANCE WITH THE PLANS AND SPECIFICATIONS.
4. SPECIAL INSPECTION OF THE FILL AROUND THE ((STREET LIGHT FOUNDATION...) SHALL BE PROVIDED AT A FREQUENCY AS NECESSARY TO ENSURE THAT PROPER FILL AND COMPACTION IS ACHIEVED. COMPACTION TEST FOR EACH LIFT SHALL BE TAKEN PER CCAUSD 203.05.02. THE SPECIAL INSPECTOR SHALL SUBMIT A COMPLIANCE REPORT TO THE OWNER/DEVELOPER

AS-BUILT REDLINE

THE MARKUP ON THIS DRAWING REFLECTS THE AS BUILT INSTALLATION

Subcontractor: Wecom Inc.	Date: 12.31.19
Field Engineer	Date
Structural Engineer: Fabiana Flanary	Date: 12.31.19

at&t

AT&T MOBILITY
10550 W. CHARLESTON
SUITE B
LAS VEGAS, NV 89135

BLACK & VEATCH

BLACK & VEATCH CORPORATION
8965 S EASTERN AVE
SUITE #325
LAS VEGAS, NV 89123

PROJECT NO:	129084.1514
DRAWN BY:	SBD
CHECKED BY:	GAC

REV	DATE	DESCRIPTION
0	08/04/19	ISSUED FOR CONSTRUCTION

PROFESSIONAL ENGINEER - STATE OF NEVADA
ERIC S. BRANDSTADTER
Exp. 12/31/20
CIVIL
No. 015897
8/9/19

IT IS A VIOLATION OF LAW FOR ANY PERSON, UNLESS THEY ARE ACTING UNDER THE DIRECTION OF A LICENSED PROFESSIONAL ENGINEER, TO ALTER THIS DOCUMENT.

NVL08228F_R03
ADJACENT TO
12126 ALTA DRIVE
LAS VEGAS, NV 89135
PICO SMALL CELL

SHEET TITLE

GENERAL NOTES

SHEET NUMBER

GN-3

SMALL CELL SITE SURVEY
SITE: CRAN_NVL08228F_R03
SE¼NW¼ OF SECTION 34, TOWNSHIP 20 SOUTH, RANGE 59 EAST

SITE #/PACE_NAME:	CRAN_NVL08228F_R03_LTE_1C_1900
FA LOCATION CODE:	14825565
USID:	209934

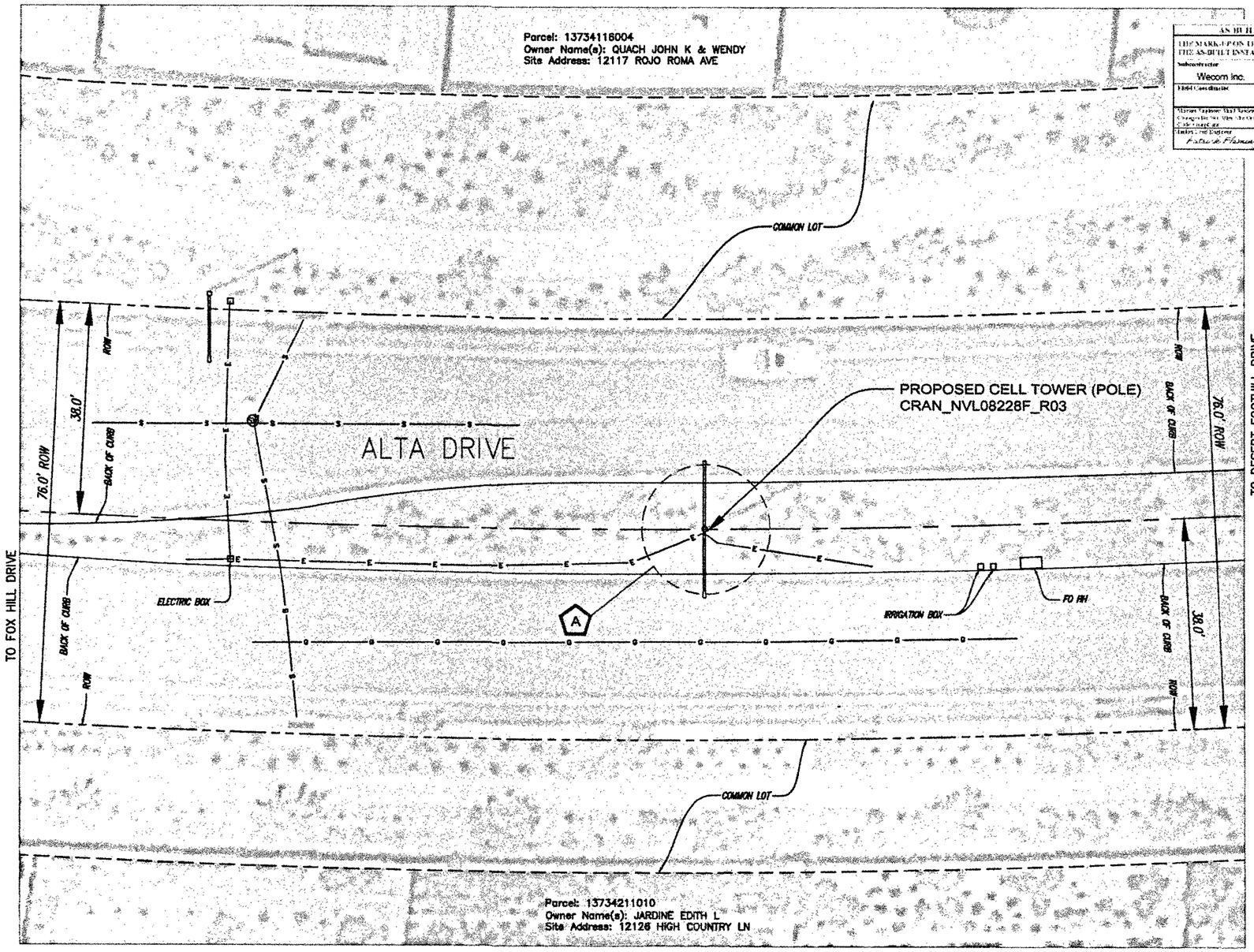

AS BUILT REDLINE

THE MARKUP ON THIS DRAWING REFLECTS THE AS-BUILT INSTALLATION

Subcontractor: Wecom Inc.	Date: 12.31.19
Field Consultant:	Date:
Matthew Andrews, Mark Sawyer, Phillip Devereux, Tri Falcon Consulting Inc. Also, the Original Design Intent, Smith Ave Consultants, Inc.	
Author / Red Engineer: Patrick Flanagan	Date: 12.31.19

N

GRAPHIC SCALE

20 0 10 20

FEET

A LATITUDE: 36°10'12.06"N
LONGITUDE: 115°21'45.22"W
GROUND ELEVATION: 3380.78'
NAVD '88

Legend

- MONUMENT
- POLE
- DOWN GUY
- GAS VALVE
- PEDASTAL
- LAMP POST
- WATER VALVE
- FIRE HYDRANT
- WATER MANHOLE
- WATER METER
- SEWER MANHOLE
- UNKNOWN OR LABELED MANHOLE
- SANITARY SEWER MANHOLE
- STORM WATER MANHOLE
- ELECTRIC MANHOLE
- TELECOM MANHOLE
- TREE

FENCELINE
ROW LINE
CENTER LINE
SEWER — S —
TELEPHONE — T —
WATER — W —
ELECTRIC — E —
GAS LINE — G —
OVERHEAD ELEC
FENCE BARB — X —
PROPERTY LINE

at&t

12900 PARK PLAZA DRIVE,
CERRITOS, CA 90703

ENGINEERS:

BLACK & VEATCH

6 SUNSET WAY
SUITE 8108
HENDERSON, NV 89014

SITE NO:	CRAN_NVL08228F_R03
DRAWN BY:	KJC
CHECKED BY:	CIS

REV	DATE	DESCRIPTION
A	8/8/19	PRELIMINARY SUBMITTAL

SURVEYOR:

CIS
PROFESSIONAL LAND SURVEYING
435-660-0816

CIS JOB NO:
CIS 315-1-31-154

SHEET TITLE
SMALL CELL SITE SURVEY

SHEET NUMBER
1 OF 1

SMALL CELL SITE SURVEY

Department of Public Works - TEFO

AS BUILT REDLINE	
THE MARK UP ON THIS DRAWING REFLECTS THE AS BUILT INSTALLATION.	
Subcontractor: Wecom Inc.	Date: 12.31.19
DBM Coordinator	Date
Market Approval: Shall Review Redline Drawings To Ensure Changes Do Not Alter The Original Design Intent And Are Code Compliant.	
Market Lead Engineer: Peter L. Flaherty	Date: 12.31.19

- *THIS FORM IDENTIFIES THE POTENTIAL POWER SUPPLY SOURCE FOR A PROPOSED SMALL CELL SITE.*
- *THIS ONLY REPRESENTS THE CONDITIONS AT TIME OF SITE SURVEY.*
- *FIELD CONDITIONS MAY CHANGE FROM THE TIME OF THE SITE SURVEY UNTIL THE START OF CONSTRUCTION.*
- *A REQUEST FOR A SMALL CELL SITE SURVEY BY A CONTRACTOR OR WIRELESS SERVICE PROVIDER DOES NOT CONSTITUTE A REQUEST FOR AUTHORIZATION TO PLACE, CONSTRUCT OR MODIFY PERSONAL WIRELESS SERVICE FACILITIES FOR PURPOSES OF ANY FEDERAL, STATE OR LOCAL RULE, LAW OR ORDER. THE ACTIONS BY THE CITY AND THE CONTRACTOR IN SURVEYING THE SITE INDICATED BELOW IS NECESSARY TO PROVIDE THE INFORMATION NECESSARY TO A WIRELESS SERVICE PROVIDER TO PREPARE ITS APPLICATION(S) FOR AUTHORIZATION TO PLACE, CONSTRUCT OR MODIFY PERSONAL WIRELESS SERVICE FACILITIES.*

Contractor's Name: Black & Veatch Wireless Use Agreement: New Cingular Wireless

Wireless Service Provider/ID#: New Cingular Wireless ID # 253207 NVL08228F_R03 Contact Name: Jason Frayer

Office Phone/Fax: 8965 South Eastern Avenue, Suite 325 LV. NV 89123 / 702-434-3378 Cell: 702-460-8926

Pole Location & ID: 12126 Alta Dr. ID# 253207

Pole Type: ○ New Pole ◉ Existing Pole

Notes: AT&T Small Cell location.
Suitable for use to serve small cell site without upgrade.

EXISTING SERVICE INFORMATION

Service Location: 12001 ALTA DR

Existing Meter #: CC032138223 Premise #: 450297

Existing Service Size: ○ 60 Amp ○ 100 Amp ○ 125 Amp ◉ 200 Amp

Street Light Circuit:

Service Type: ◉ Pedestal ○ Pole Mount ○ Wall Mount

Current Application: ○ Traffic Signal ◉ Street Lighting ○ Both

Existing Load (Amps): Traffic Signal: ____ Street Lighting: 59 Combined: 59

Field Tested By: Enrique L **Date:** 3/25/19

CLV REPRESENTATIVE

FOR INTERNAL USE ONLY

CLV Field Reviewer's Name: B. Bradway & M. Algieri Field Review Date: 3/20/19

Senior/Supervisor Review Signature: [signature] Date Reviewed: 4/9/19

POWER SERVICE DOCUMENTATION

LOAD BAY DOCUMENTATION FOR SPACE UTILIZATION

(NOTE RESPECTIVE AMPACITY AND BREAKER SIZE FOR ALL SLOTS PRESENTLY IN USE)

AS-BUILT REDLINE	
THE MARKUPS ON THIS DRAWING REFLECTS THE AS BUILT INSTALLATION	
Subcontractor Wecom Inc.	Date 12.31.19
Field Coordinator	Date
Market Engineer: Will Serve Redline Drawings To Ensure Changes Do Not Alter the Original Design Intent. Sign Off Is Not Considered an	
Market Grid Engineer Patrick Flanagan	Date 12.31.19

----------	200 "DBL" (29A)
60 "DBL" (14A)	"DBL" (30A)
"DBL" (15A)	15 (1A)
60 "DBL" (14A)	Spare
"DBL" (15A)	Spare
Spare	Spare
Spare	Spare