THIS DRAWING IS
NOT A SITE SURVEY

THE PURPOSE OF THIS DRAWING IS TO SHOW HOW THE DEVELOPED SITE RELATES TO THE PARENT PARCEL AND ADJACENT PROPERTIES. R.O.W. MEASUREMENTS ARE APPROXIMATIONS.

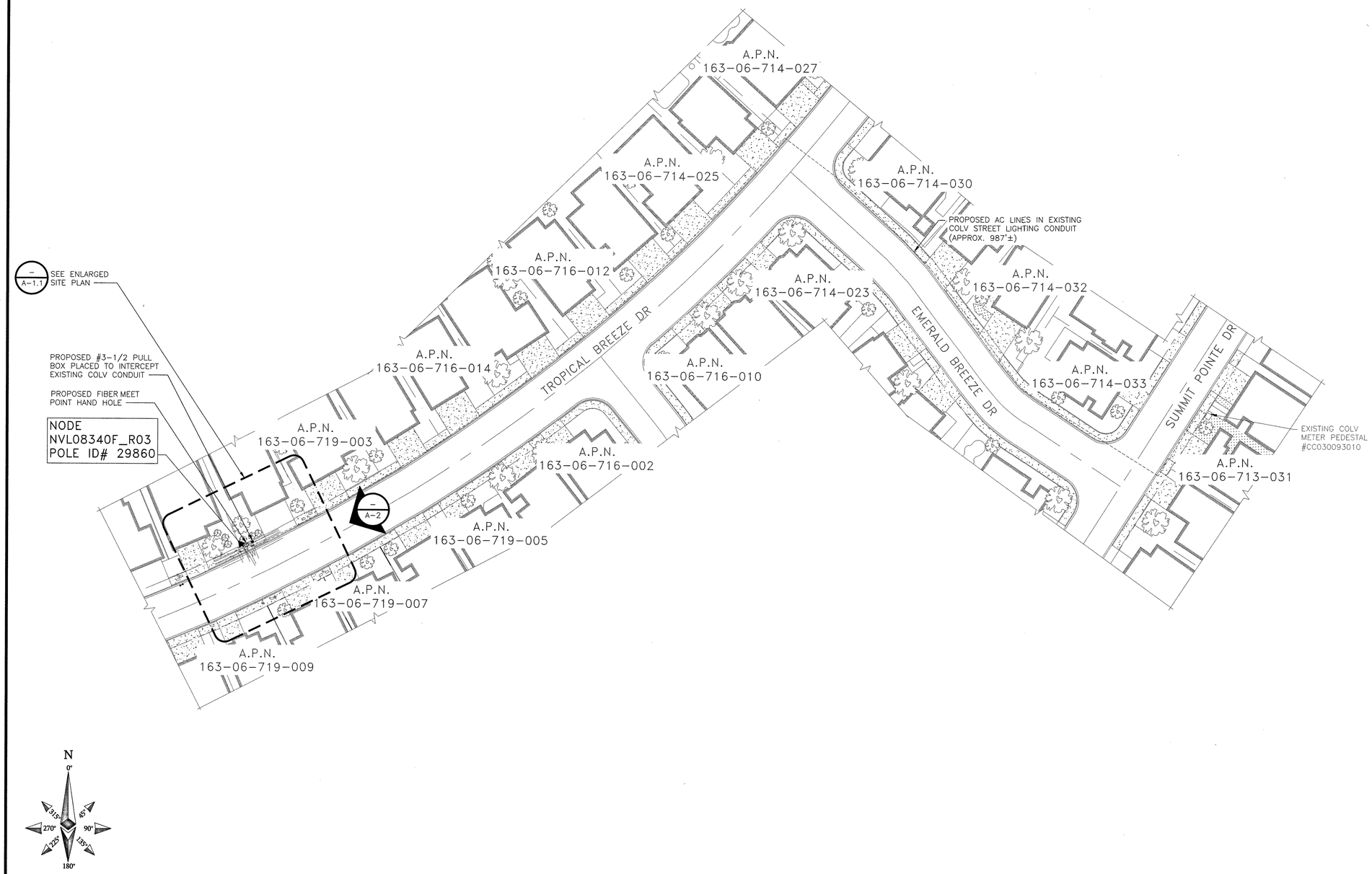

EXPANDED SITE PLAN AND UTILITY ROUTE

40' 20' 0 40' 80'
1"=40'

A

at&t

AT&T MOBILITY
10550 W. CHARLESTON
SUITE B
LAS VEGAS, NV 89135

BLACK & VEATCH

BLACK & VEATCH CORPORATION
8965 S EASTERN AVE
SUITE #325
LAS VEGAS, NV 89123

PROJECT NO:	129084.1521
DRAWN BY:	VIG
CHECKED BY:	GAC

REV	DATE	DESCRIPTION
0	06/11/19	ISSUED FOR CONSTRUCTION

PROFESSIONAL ENGINEER - STATE OF NEVADA
HYUN KIM
Expires 6-30-21
STRUCTURAL
NO. 026565

IT IS A VIOLATION OF LAW FOR ANY PERSON, UNLESS THEY ARE ACTING UNDER THE DIRECTION OF A LICENSED PROFESSIONAL ENGINEER, TO ALTER THIS DOCUMENT.

NVL08340F_R03
INTERSECTION OF
1921 TROPICAL BREEZE DR
LAS VEGAS, NV 89117
PICO SMALL CELL

SHEET TITLE

EXPANDED SITE PLAN
AND UTILITY ROUTE

SHEET NUMBER

A-1

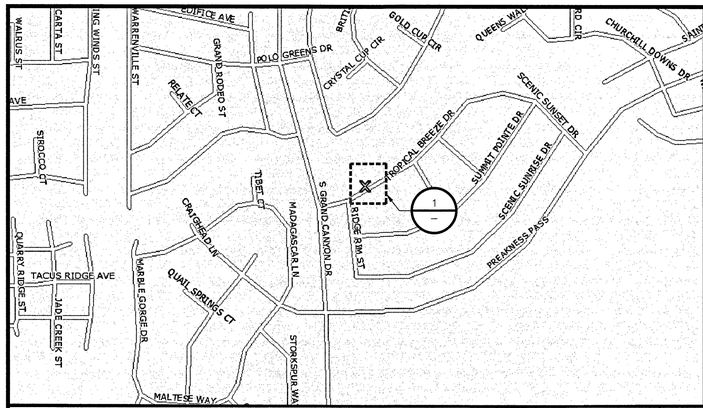

SITE PLAN MAP | NO SCALE | A

SITE PHOTO | B

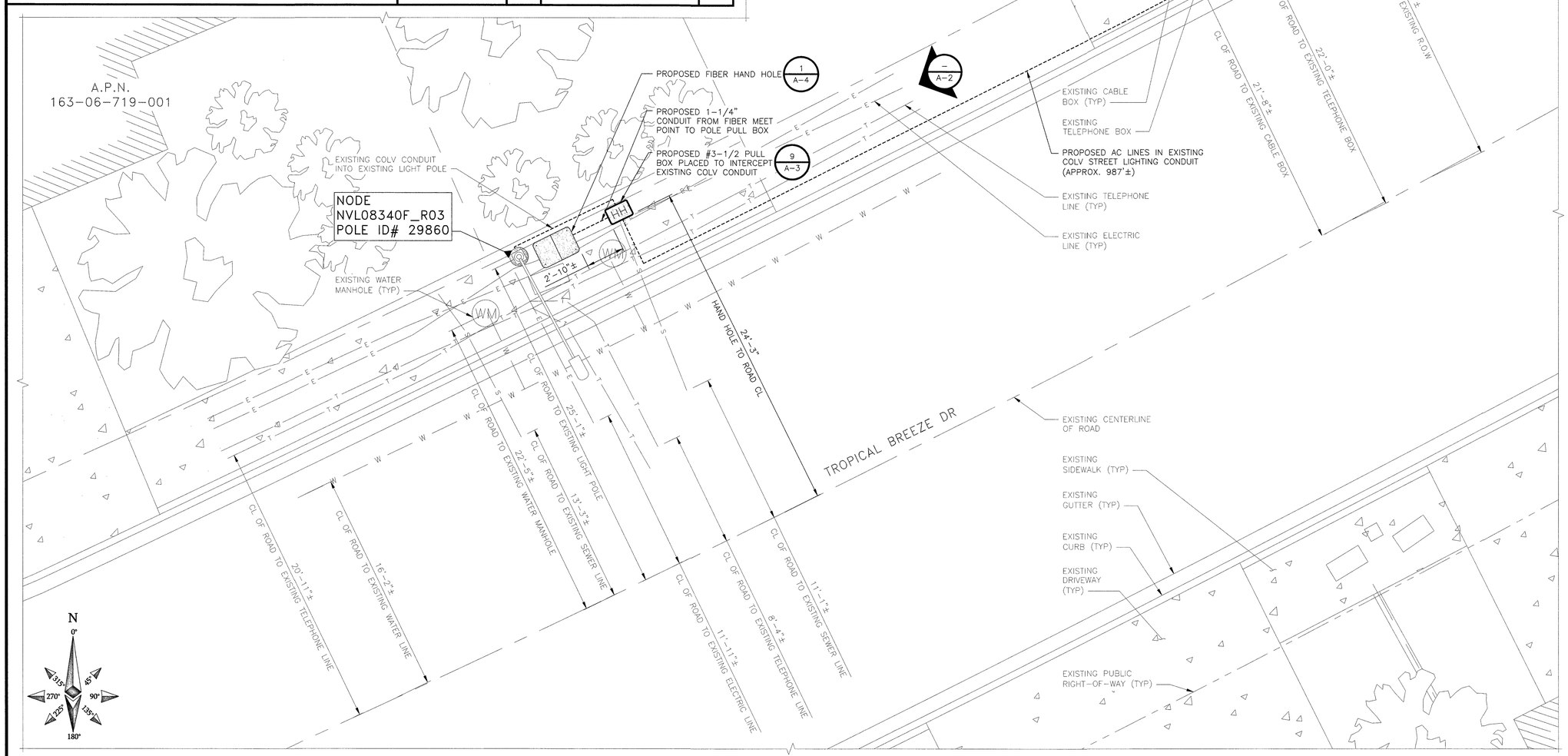

ENLARGED SITE PLAN

4' 2' 0 4' 8'
1/4"=1'-0"

1

at&t

AT&T MOBILITY
10550 W. CHARLESTON
SUITE B
LAS VEGAS, NV 89135

BLACK & VEATCH

BLACK & VEATCH CORPORATION
8965 S EASTERN AVE
SUITE #325
LAS VEGAS, NV 89123

PROJECT NO:	129084.1521
DRAWN BY:	VIG
CHECKED BY:	GAC

REV	DATE	DESCRIPTION
0	06/11/19	ISSUED FOR CONSTRUCTION

PROFESSIONAL ENGINEER - STATE OF NEVADA
HYUN KIM
Expires 30-21
STRUCTURAL
No. 026588

IT IS A VIOLATION OF LAW FOR ANY PERSON, UNLESS THEY ARE ACTING UNDER THE DIRECTION OF A LICENSED PROFESSIONAL ENGINEER, TO ALTER THIS DOCUMENT.

NVL08340F_R03
INTERSECTION OF
1921 TROPICAL BREEZE DR
LAS VEGAS, NV 89117
PICO SMALL CELL

SHEET TITLE

ENLARGED SITE PLAN

SHEET NUMBER

A-1.1

NOTE

THESE DRAWINGS HAVE BEEN CREATED BASED ON STRUCTURAL CALCULATIONS PERFORMED BY BLACK & VEATCH CONFIRMING THAT THE STRUCTURE HAS SUFFICIENT CAPACITY TO SUPPORT THE PROPOSED LOADING.

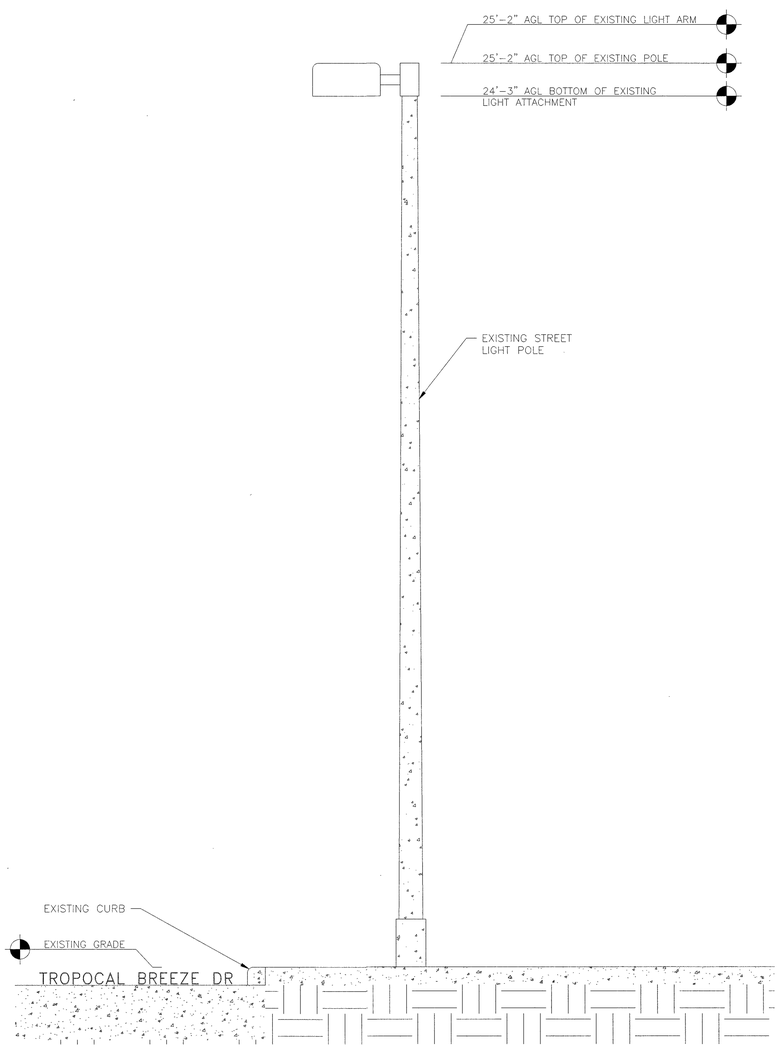

EXISTING NORTHEAST ELEVATION | 12" 6" 0 1' 2' 3' 4' 5' 1/2"=1'-0" | A

NOTES
1. REFER TO THE RFDS FOR THIS NODE FOR THE AZIMUTH INFORMATION.
2. CABLE SHROUD NOT ENTIRELY SHOWN FOR CLARITY.
3. ALL EQUIPMENT TO BE PAINTED TO MATCH EXISTING STRUCTURE.

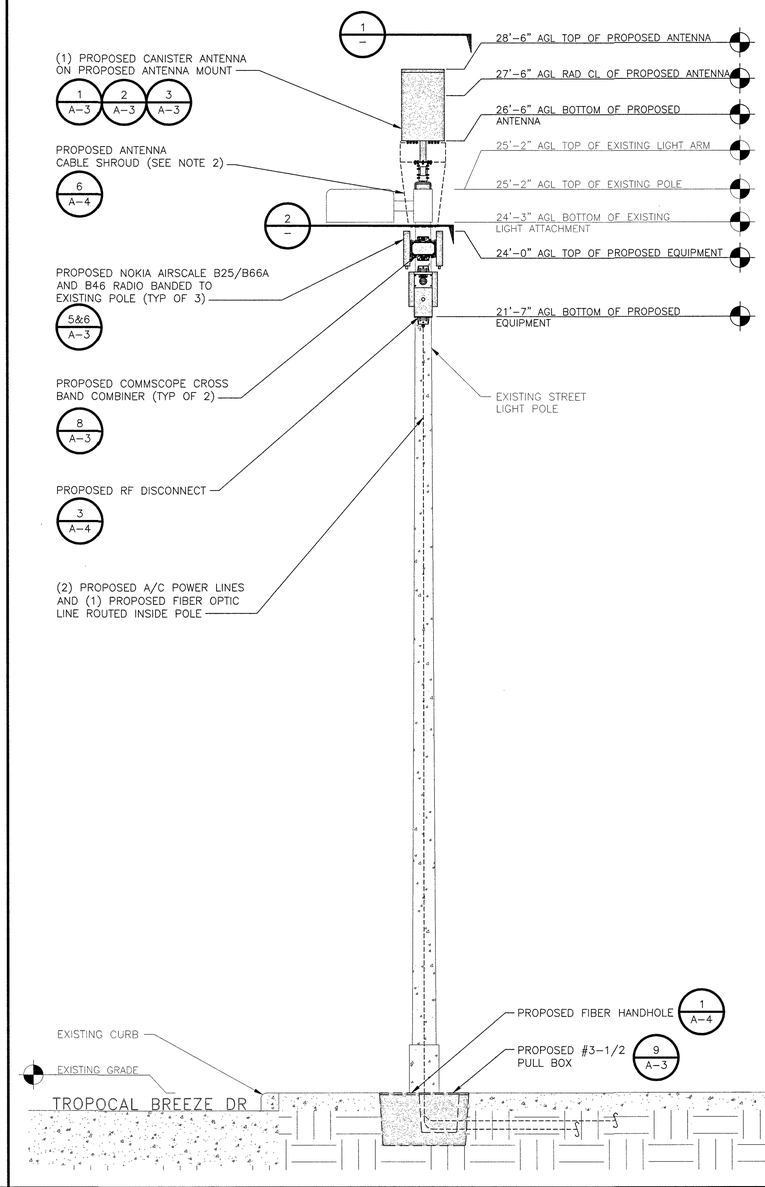

PROPOSED NORTHEAST ELEVATION | 12" 6" 0 1' 2' 3' 4' 5' 1/2"=1'-0" | B

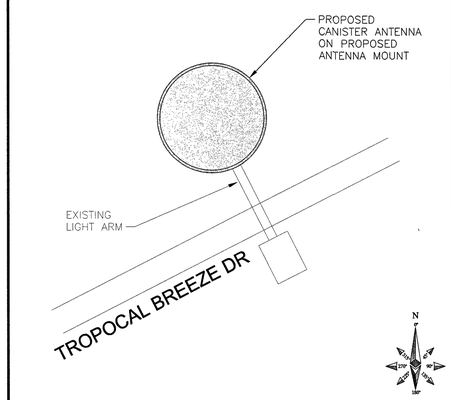

ANTENNA PLAN VIEW | NO SCALE | 1

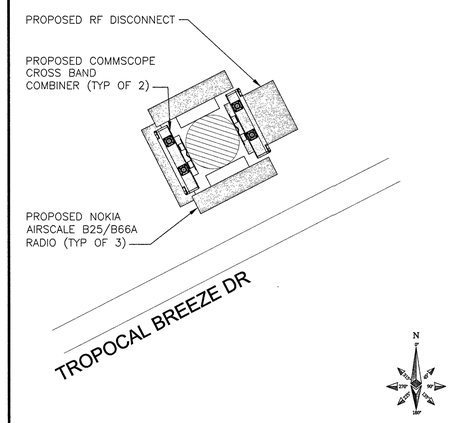

RADIO PLAN VIEW | NO SCALE | 2

NOT USED | NO SCALE | 3

at&t

AT&T MOBILITY
10550 W. CHARLESTON
SUITE B
LAS VEGAS, NV 89135

BLACK & VEATCH

BLACK & VEATCH CORPORATION
8965 S EASTERN AVE
SUITE #325
LAS VEGAS, NV 89123

PROJECT NO:	129084.1521
DRAWN BY:	VIG
CHECKED BY:	GAC

REV	DATE	DESCRIPTION
0	06/11/19	ISSUED FOR CONSTRUCTION

PROFESSIONAL ENGINEER - STATE OF NEVADA
HYUN KIM
Expires 6-30-21
STRUCTURAL
No. 026568

IT IS A VIOLATION OF LAW FOR ANY PERSON, UNLESS THEY ARE ACTING UNDER THE DIRECTION OF A LICENSED PROFESSIONAL ENGINEER, TO ALTER THIS DOCUMENT.

NVL08340F_R03
INTERSECTION OF
1921 TROPICAL BREEZE DR
LAS VEGAS, NV 89117
PICO SMALL CELL

SHEET TITLE

POLE ELEVATIONS AND RISER DETAILS

SHEET NUMBER

A-2

GAMMA NU OYZ9X360V10T20-RET

DIAMETER:	9.5" (254mm)
HEIGHT:	23.6" (600mm)
VOLUME:	0.97ft³
TOTAL WEIGHT (W/O MOUNTING KIT):	18.2 lbs (8.25 kg)
CONNECTOR INTERFACE:	(10) 4.3-10 FEMALE
RF CONNECTOR LOCATION:	BOTTOM

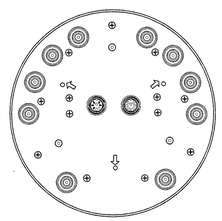

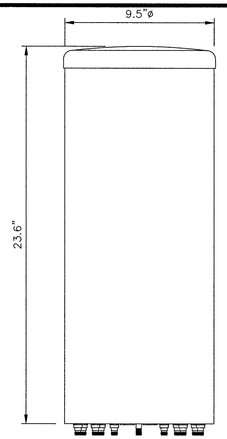

ANTENNA SPECIFICATIONS | NO SCALE | 1

CONCEALFAB 900085

DIMENSIONS HxW (W/O BRACKET):	6.88"x7.00"ø (174.75x178mm)
(WITH ANTENNA BRACKET):	±13.18"x7.00"ø (334.77x178mm)
WEIGHT (WITHOUT BRACKET):	5.74 lbs (2.60 kg)

* DETAIL IS FOR GRAPHIC REPRESENTATION, CONTRACTOR MUST REFERENCE MANUFACTURERS DRAWINGS PRIOR TO CONSTRUCTION.

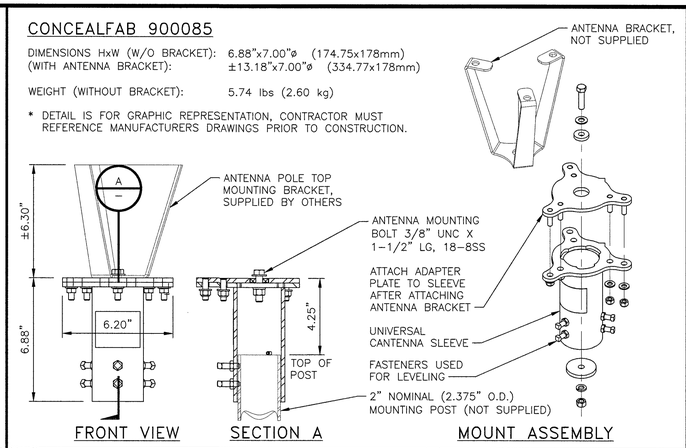

ANTENNA SLEEVE MOUNT | NO SCALE | 2

CONCEALFAB 007948

DIMENSIONS HxWxL:	12.75"x6.65"x11.25" (324x169x285.75 mm)
WEIGHT:	22.74 lbs (10.31 kg)

* DETAIL IS FOR GRAPHIC REPRESENTATION, CONTRACTOR MUST REFERENCE MANUFACTURERS DRAWINGS PRIOR TO CONSTRUCTION.

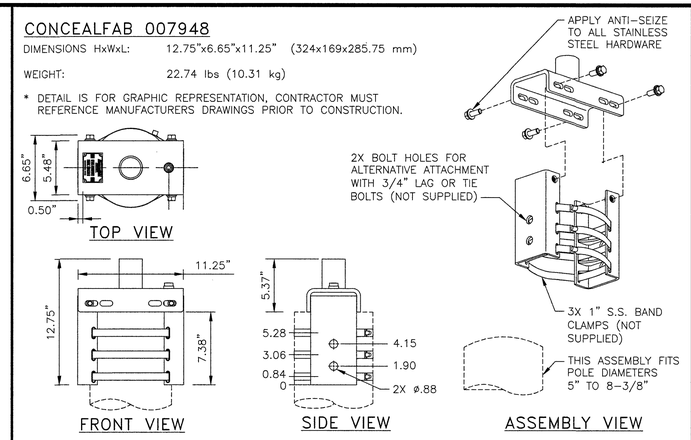

STANDARD POLE TOP MOUNT | NO SCALE | 3

NOT USED | NO SCALE | 4

NOKIA AIRSCALE MICRO B25/B66A RRH

DIMENSIONS, HxWxD:	11.61"x9.65"x2.17" (295x245x55mm)
WEIGHT:	12.79 lbs (5.8 kg)
INTERFACES:	(2) CPRI FRONTHAUL PORTS (1) EXTERNAL ALARM PORT
POWER CONSUMPTION :	TYP. 110W, MAX. 150W
TEMP. RANGE:	-40°C TO +55°C

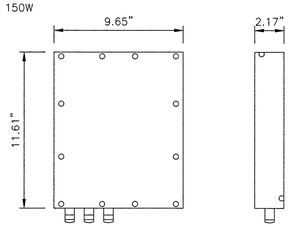

RADIO SPECIFICATIONS | NO SCALE | 5

NOKIA AIRSCALE B46 (LAA) RRH

DIMENSIONS, HxWxD:	11.6"x9.6"x1.6" (294.64x243.84x40.64mm)
WEIGHT:	11.7 lbs (5.31 kg)
INTERFACES:	(1) CPRI SFP INCLUDED
ANTENNA CONFIGURATION:	2T2R
RF:	NEX10 PLUS FEMALE

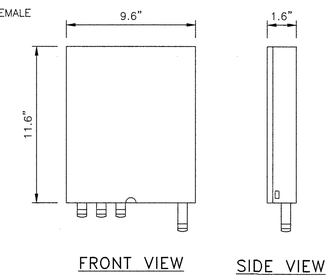

RADIO SPECIFICATIONS | NO SCALE | 6

NOT USED | NO SCALE | 7

COMMSCOPE CBC1923T-4310 E11F13P06

DIMENSIONS, WxDxH:	4.6"x1.8"x8.3" (116x46x212mm)
CONNECTORS:	MODULES: (4) 4.3-10 DIN FEMALE ANT: (2) 4.3-10 DIN FEMALE
WEIGHT:	4.9 lbs (2.2 kg)

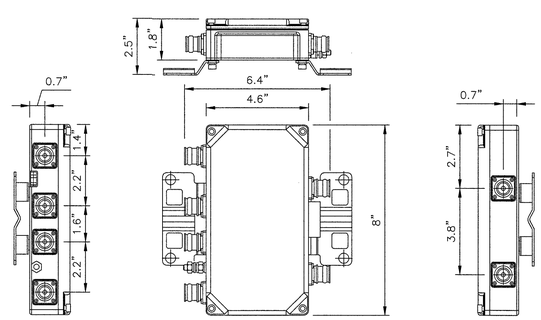

COMBINER SPECIFICATIONS | NO SCALE | 8

NOTES

1. COVERS INSTALLED IN TRAFFIC AND OPEN AREAS ACCESSIBLE TO TRAFFIC SHALL BE PER STANDARD DRAWING NO. 327.
2. SEE STANDARD DRAWING NO. 323 FOR COVER GROUNDING.
3. REFER TO SHEET GN-1 FOR ADDITIONAL HANDHOLE NOTES.

PULL BOX			
	SIZE (COMMERCIAL DESIGNATION)		
	3-1/2	5	7
A	15	21-3/4	30-5/8
B	10	11-3/4	17-5/8
C	3/4	2	2
D	19-3/8	25	34-3/4
E	14-3/8	15	21-3/4
F	12	12	12
G	N/A	10-1/4	11-1/2

NOMINAL DIMENSION IN INCHES

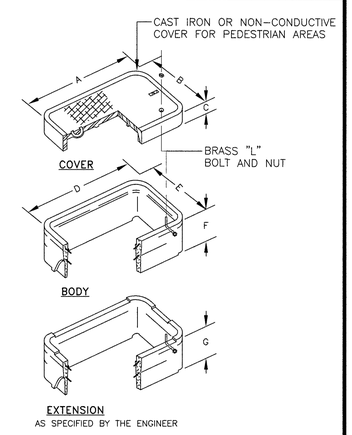

CONCRETE PULL BOX SPECIFICATIONS | NO SCALE | 9

at&t

AT&T MOBILITY
10550 W. CHARLESTON
SUITE B
LAS VEGAS, NV 89135

BLACK & VEATCH

BLACK & VEATCH CORPORATION
8965 S EASTERN AVE
SUITE #325
LAS VEGAS, NV 89123

PROJECT NO:	129084.1521
DRAWN BY:	VIG
CHECKED BY:	GAC

REV	DATE	DESCRIPTION
0	06/11/19	ISSUED FOR CONSTRUCTION

PROFESSIONAL ENGINEER - STATE OF NEVADA
HYUN KIM
Exp. 06-30-21
STRUCTURAL
06/11/19
No. 026585

IT IS A VIOLATION OF LAW FOR ANY PERSON, UNLESS THEY ARE ACTING UNDER THE DIRECTION OF A LICENSED PROFESSIONAL ENGINEER, TO ALTER THIS DOCUMENT.

NVL08340F_R03
INTERSECTION OF
1921 TROPICAL BREEZE DR
LAS VEGAS, NV 89117
PICO SMALL CELL

SHEET TITLE

EQUIPMENT DETAILS

SHEET NUMBER

A-3

FCA243624T-00006 FIBERGLASS/PCX POLYMER CONCRETE ASSEMBLY

DIMENSIONS (LxWxH): 36"x24"x24"

INTERIOR DIMENSIONS (LXWXH): 33"X21"X21"

- USDA/RUS APPROVED
- DROP-IN NAMEPLATE
- SHIPPED ASSEMBLED
- SKID RESISTANT COVER
- STAINLESS STEEL BOLTS
- CAST-IN FLOATING NUT BOX
- INTEGRAL DRAIN HOLES

LOAD RATINGS:

INCIDENTAL TRAFFIC – PARKING LOT, SIDEWALK

CONFORMS TO:
- WUC 3.6
- ASTM C 857
- ANSI/SCTE 77 –"T15/20K"

INSIDE DIMENSIONS		
Length	Width	Depth
33 1/8"	21 1/2"	21"
43 7/8"	32 3/8"	

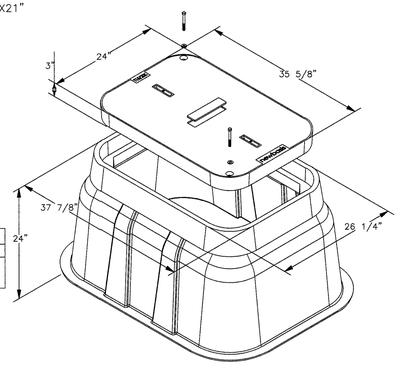

HAND HOLE SPECIFICATIONS | NO SCALE | 1

NOT USED | NO SCALE | 2

PACTECHSOL PTS90123

DIMENSIONS, HxWxD (VOLUME): 16.15"x6.68"x6.285" (0.39ft³)

OPERATING VOLTAGE: 120 VAC

MAIN BREAKER: 60 amps

NUMBER OF BREAKERS (MAX): (5) UL-489 BREAKERS; 0-25 amp; DUAL SPD

POWER INPUT WIRE SIZE: #14-#4 awg CU-Al

POWER OUTPUT WIRE SIZE: #14-#4 awg CU-Al

NEUTRAL & GROUND CONTACTS: #14-#4 AWG CU-Al

TOTAL WEIGHT: 13 lbs

BASE P/N	POSITION P1	P2	P3	P4	P5	P6*		P		DESCRIPTION		
PTS90123-	5	-	A	A	A	A	A	-	PN		AT&T PICO SUBE	STANDARD	NEQ, 20123
PTS90123-	6	-	K	K	K	K	K	-	PN		AT&T MICRO SUBE	STANDARD	NEQ, 20234
PTS90123-	5	-	A	A	A	A	A	-	PN	S	AT&T PICO SUBE	STANDARD	NEQ, 20283
PTS90123-	6	-	K	K	K	K	K	-	PN	S	AT&T MICRO SUBE	STANDARD	NEQ, 20284

* = NO EXTERNAL AC DISCONNECT
S = INTEGRATED EXTERNAL AC DISCONNECT SWITCH

AMPs	1	2	3	4	5	6	7	8	9	10	11	12	13	14	15	16	17	18	19	20
CODE=	C	2	S	4	5	6	7	8	9	A	B	C	D	E	F	G	H	I	J	K

AMPERAGE CODE (0=60A) 20 Ea MAIN BREAKER

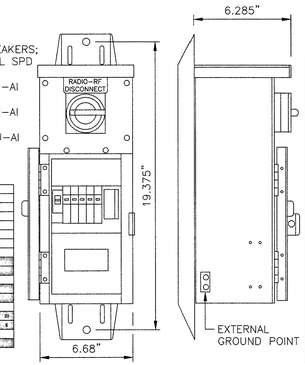

LOAD CENTER DETAIL | NO SCALE | 3

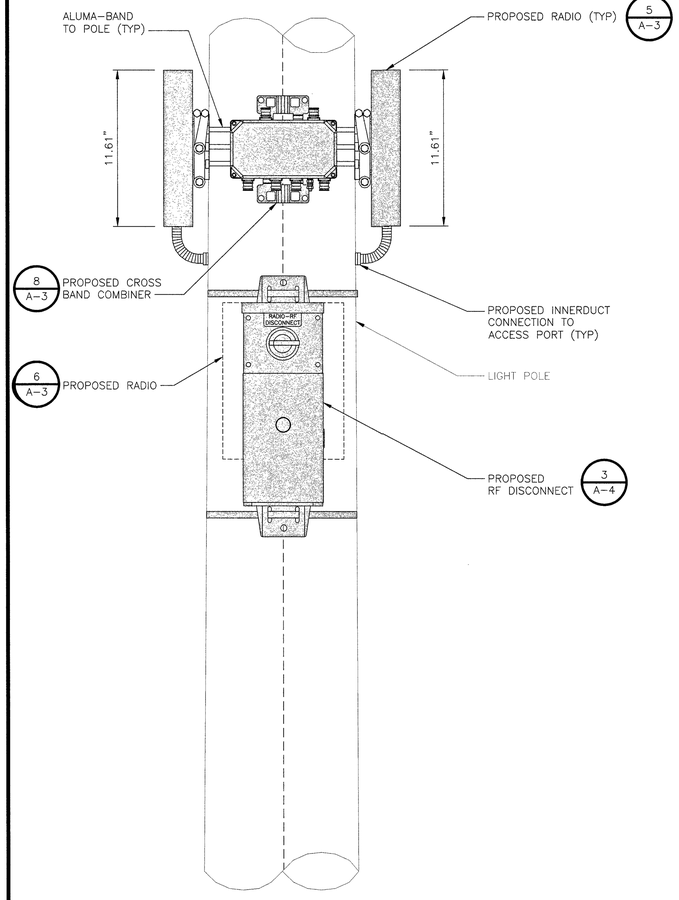

EQUIPMENT PLACEMENT DETAIL | NO SCALE | 4

NOT USED | NO SCALE | 5

CONCEALFAB 007949

HEIGHT: 20" (508 mm)

DIAMETER: 14.62" (365 mm)

WEIGHT: 6 lbs (2.7 kg)

* DETAIL IS FOR GRAPHIC REPRESENTATION, CONTRACTOR MUST REFERENCE MANUFACTURERS DRAWINGS PRIOR TO CONSTRUCTION.

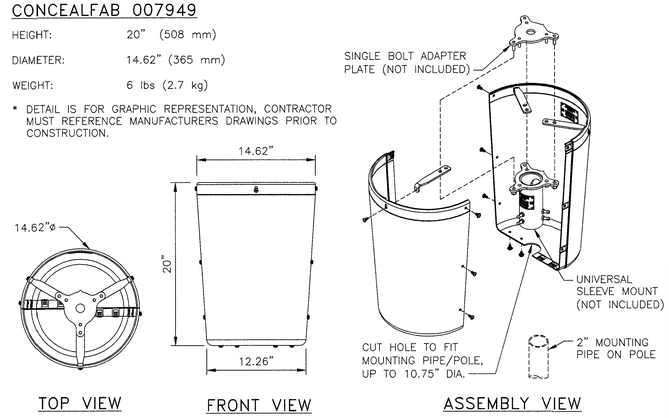

STANDARD POLE TOP MOUNT CABLE SHROUD | NO SCALE | 6

NOT USED | NO SCALE | 7

NOT USED | NO SCALE | 8

AT&T MOBILITY
10550 W. CHARLESTON
SUITE B
LAS VEGAS, NV 89135

BLACK & VEATCH

BLACK & VEATCH CORPORATION
8965 S EASTERN AVE
SUITE #325
LAS VEGAS, NV 89123

PROJECT NO:	129084.1521
DRAWN BY:	VIG
CHECKED BY:	GAC

REV	DATE	DESCRIPTION
0	06/11/19	ISSUED FOR CONSTRUCTION

PROFESSIONAL ENGINEER - STATE OF NEVADA
HYUN KIM
Expires 06-21
STRUCTURAL
06/11/19
No. 026585

IT IS A VIOLATION OF LAW FOR ANY PERSON, UNLESS THEY ARE ACTING UNDER THE DIRECTION OF A LICENSED PROFESSIONAL ENGINEER, TO ALTER THIS DOCUMENT.

NVL08340F_R03
INTERSECTION OF
1921 TROPICAL BREEZE DR
LAS VEGAS, NV 89117
PICO SMALL CELL

SHEET TITLE

EQUIPMENT DETAILS

SHEET NUMBER

A-4

NOTICE

RF energy emitted by this device may exceed the FCC's general public exposure limits. Stay at least 1 foot away from the device. *Call 800-638-2822 for help if you need access within 1 foot*

RF NOTICE DECAL

NOTICE

AT&T operates antennas at this structure.

Above this point you are entering an area where where radio frequency (RF) fields may exceed the FCC General Population Exposure limits.

Follow safety guidelines for working in an RF environment.

Keep 1 ft. away from the fronts of antennas.

Contact AT&T at 800-638-2822, opt. 9, 3 and follow their instructions prior to performing and maintenance or repairs above this point.

This is AT&T Site USID_____

⚠ CAUTION

AT&T operates antennas at this structure.

Above this point you are entering an area where where radio frequency (RF) fields may exceed the FCC General Occupational Exposure limits.

Follow safety guidelines for working in an RF environment.

Keep 1 ft. away from the fronts of antennas.

Contact AT&T at 800-638-2822, opt. 9, 3 and follow their instructions prior to performing and maintenance or repairs above this point.

Cell Site USID_____

EME PLACARD/DECAL

NOTE: SPECIFIC EME PLACARD WILL BE PLACED AFTER EME REPORT

RF SIGNAGE DETAIL | NO SCALE | 1

MULTI-TAP CONNECTOR WITH CLEAR INSULATION, DOUBLE-SIDED (PCSB4-4-6Y)

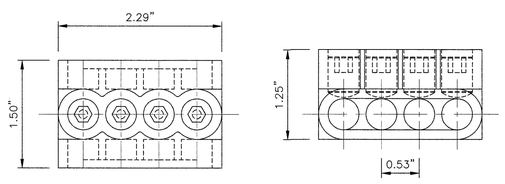

CONNECTOR DETAIL | NO SCALE | 2

BUSSMANN – HEB SERIES

BREAKAWAY MODEL#:	HEB-AW-RLC-A (5.8" LONG)
NON-BREAKAWAY MODEL#:	HEB-AA (4.4" LONG)
WIRE RANGE:	#8-16; (2) #12-16
RECOMMENDED FUSES:	BAF, FNM, FNQ, KLM AND KTK
AMPS:	UP TO 30A
VOLTS:	600V

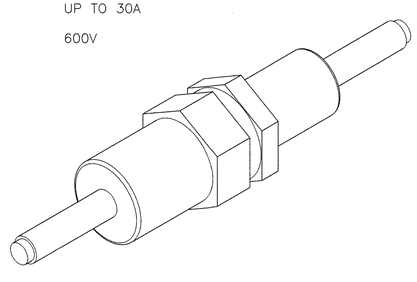

PROPOSED BREAKAWAY AND NON-BREAKAWAY IN-LINE FUSE HOLDER | NO SCALE | 3

NOTES

1. CONTRACTOR IS TO FIELD VERIFY ALL EXISTING ITEMS SHOWN ON THE ELECTRICAL ONE-LINE DIAGRAM AND NOTIFY THE ENGINEER OF ANY DISCREPANCIES.
2. ALL NEW CONDUCTOR WIRE TO BE INSTALLED SHALL BE COPPER THWN-2, THW-2, RHW-2, XHHW-2 WIRE UNLESS NOTED OTHERWISE.
3. ALL GROUNDING AND BONDING TO BE PER THE RECOGNIZED EDITION OF THE NATIONAL ELECTRIC CODE (NEC).
4. ALL INSTALLED CONDUCTORS AND SIGNAL CABLES TO BE CLEARLY MARKED "AT&T SMALL CELL" WITH BRASS OR FIBERGLASS TAGS.

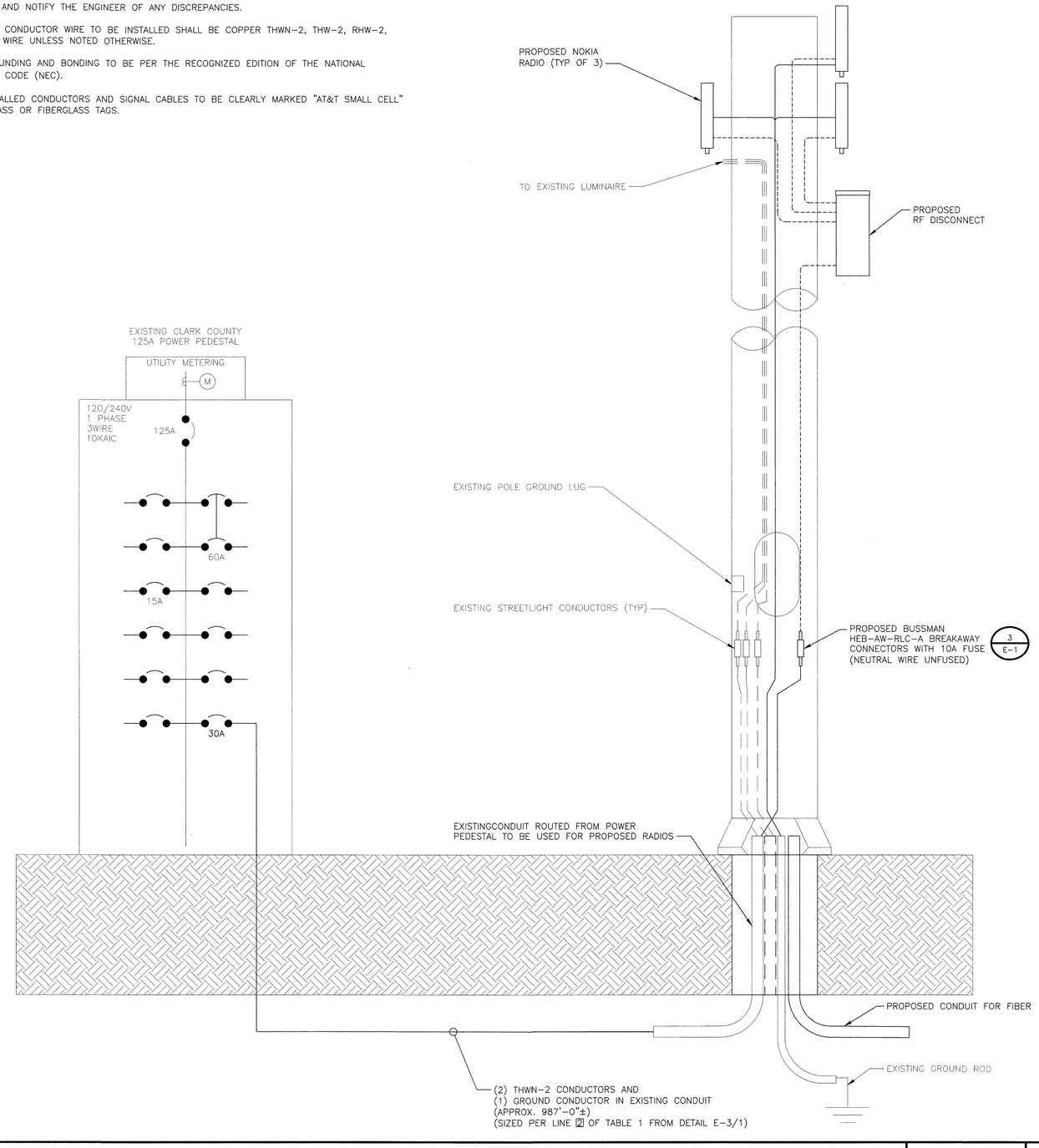

TYPICAL POLE SITE TEMPLATE | NO SCALE | 4

at&t

AT&T MOBILITY
10550 W. CHARLESTON
SUITE B
LAS VEGAS, NV 89135

BLACK & VEATCH

BLACK & VEATCH CORPORATION
8965 S EASTERN AVE
SUITE #325
LAS VEGAS, NV 89123

PROJECT NO:	129084.1521
DRAWN BY:	VIG
CHECKED BY:	GAC

REV	DATE	DESCRIPTION
0	06/11/19	ISSUED FOR CONSTRUCTION

PROFESSIONAL ENGINEER STATE OF NEVADA
DAVID A. HINTON
Exp. 6/30/21
ELECTRICAL
No. 025395
6/11/19

IT IS A VIOLATION OF LAW FOR ANY PERSON, UNLESS THEY ARE ACTING UNDER THE DIRECTION OF A LICENSED PROFESSIONAL ENGINEER, TO ALTER THIS DOCUMENT.

NVL08340F_R03
INTERSECTION OF
1921 TROPICAL BREEZE DR
LAS VEGAS, NV 89117
PICO SMALL CELL

SHEET TITLE

ELECTRICAL DETAILS AND DIAGRAMS

SHEET NUMBER

E-1

EXISTING ELECTRICAL LOAD STUDY

EXISTING LOAD.....34.05 AMPS
ALLOWED LOAD 80%.....100 AMPS

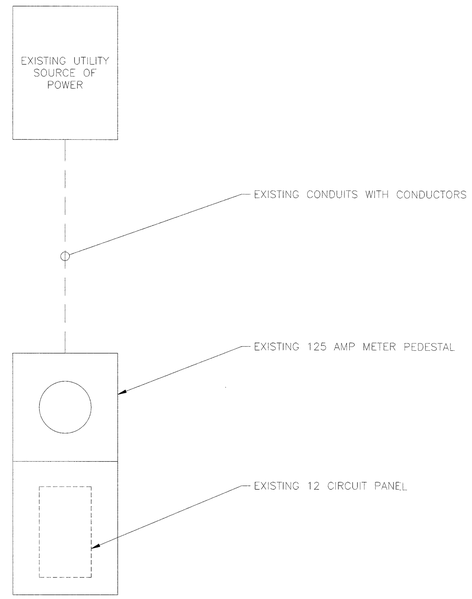

EXISTING SINGLE LINE DIAGRAM | NO SCALE | 1

PROPOSED ELECTRICAL LOAD STUDY

EXISTING LOAD.....34.05 AMPS
SAFETY FACTOR 125%.....42.56 AMPS
PROPOSED LOAD.....2.34 AMPS
TOTAL LOAD.....44.91 AMPS
ALLOWED LOAD 80% OF 125 AMPS.....100 AMPS

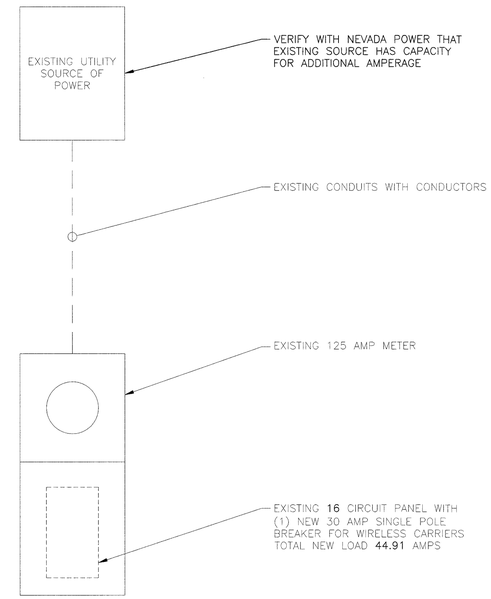

PROPOSED SINGLE LINE DIAGRAM | NO SCALE | 2

Site Name:		***1921 TROPICAL BREEZE DR***					**MODEL NUMBER:**	***EXISTING METER AND LOAD CENTER PEDESTAL***								
SITE NUMBER:		***CRAN_NVL08340F_R03***					**PHASE:**	**1**			**WIRE:**			***3***		
VOLTAGE:		**240 /120**	**Volts AC**				**BUSS RATING:**	**200**	**AMPS**							
MAIN BREAKER:		**200 AMPS**														
MOUNT:		***SURFACE***														
ENCLOSURE TYPE:		***NEMA 3R***														
PANEL STATUS:		***EXISTING***														
CKT	**LOAD DESCRIPTION**	**BREAKER AMPS**	**BREAKER POLES**	**BREAKER STATUS**	**SERVICE LOAD VA**	**Demand Factor**	**USAGE FACTOR**	**PHASE A VA**	**PHASE B VA**	**USAGE FACTOR**	**Demand Factor**	**SERVICE LOAD VA**	**BREAKER STATUS**	**BREAKER POLES**	**BREAKER AMPS**	**LOAD DESCRIPTION**	**CKT**
1								***0***		1.25	1.00	0	ON	2	125	MAIN	**2**
3									***0***	1.25	1.00	0					**4**
5								***5085***		1.25	1.00	4068	ON	2	60	STREET LIGHTS	**6**
7									***5040***	1.25	1.00	4032					**8**
9	PHOTO CELL	15	1	ON	72	1.00	1.25	***90***									**10**
11									***0***								**12**
13								***0***									**14**
15									***563***	**1.25**	**1.00**	**450**	**NEW**	**1**	**30**	**PACTECHSOL PTS90122-3-AA777-PN-8**	**16**
								PHASE A	***PHASE B***								
								5175	***5603***	**VA**							
									TOTAL	**KVA**	**10.78**						
										AMPS	**44.91**	**≤ 80% OF MAIN BREAKER**					

PROPOSED PANEL SCHEDULE AND CALCS | NO SCALE | 3

AT&T MOBILITY
10550 W. CHARLESTON
SUITE B
LAS VEGAS, NV 89135

BLACK & VEATCH

BLACK & VEATCH CORPORATION
8965 S EASTERN AVE
SUITE #325
LAS VEGAS, NV 89123

PROJECT NO:	129084.1521
DRAWN BY:	VIG
CHECKED BY:	GAC

REV	DATE	DESCRIPTION
0	06/11/19	ISSUED FOR CONSTRUCTION

PROFESSIONAL ENGINEER - STATE OF NEVADA
DAVID C. HINTON
EXP. 12/31/2021
ELECTRICAL
No. 025351

6/11/19

IT IS A VIOLATION OF LAW FOR ANY PERSON, UNLESS THEY ARE ACTING UNDER THE DIRECTION OF A LICENSED PROFESSIONAL ENGINEER, TO ALTER THIS DOCUMENT.

NVL08340F_R03
INTERSECTION OF
1921 TROPICAL BREEZE DR
LAS VEGAS, NV 89117
PICO SMALL CELL

SHEET TITLE
ELECTRICAL CALCULATIONS AND SCHEDULES

SHEET NUMBER
E-2

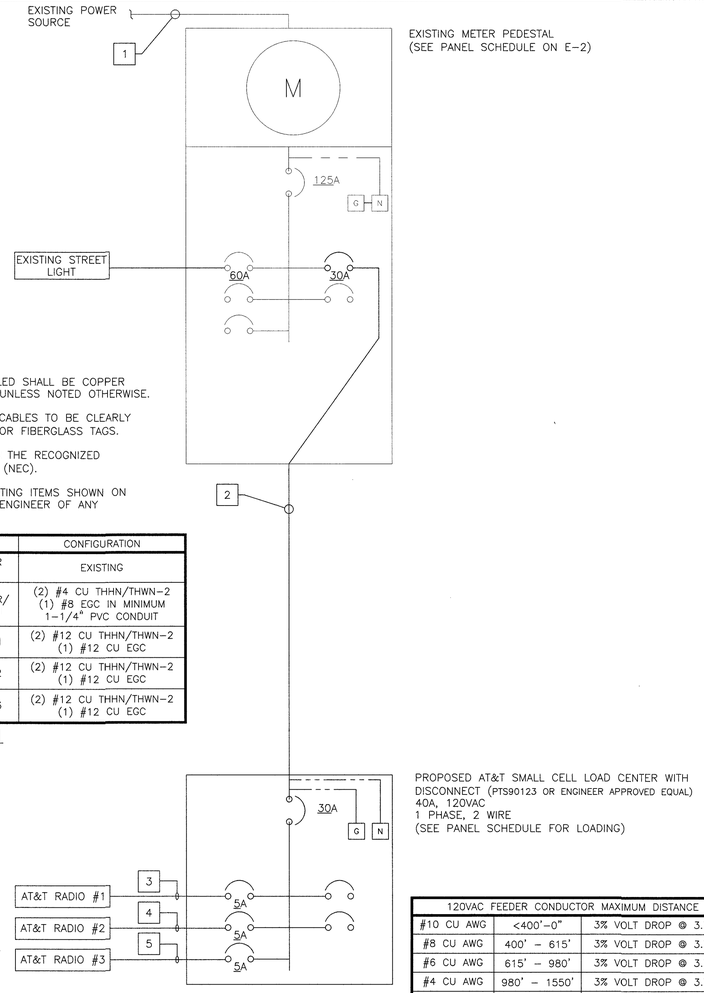

NOTES:

1. ALL NEW CONDUCTOR WIRE TO BE INSTALLED SHALL BE COPPER THWN-2, THW-2, RHW-2, XHHW-2 WIRE UNLESS NOTED OTHERWISE.
2. ALL INSTALLED CONDUCTORS AND SIGNAL CABLES TO BE CLEARLY MARKED "AT&T SMALL CELL" WITH BRASS OR FIBERGLASS TAGS.
3. ALL GROUNDING AND BONDING TO BE PER THE RECOGNIZED EDITION OF THE NATIONAL ELECTRIC CODE (NEC).
4. CONTRACTOR IS TO FIELD VERIFY ALL EXISTING ITEMS SHOWN ON THE ONE-LINE DIAGRAM AND NOTIFY THE ENGINEER OF ANY DISCREPANCIES.

NO	FROM	TO	CONFIGURATION
1	UTILITY P.O.C.	EXISTING METER PEDESTAL	EXISTING
2	EXISTING METER PEDESTAL	AC LOAD CENTER/ SAFETY SWITCH	(2) #4 CU THHN/THWN-2 (1) #8 EGC IN MINIMUM 1-1/4" PVC CONDUIT
3	AC LOAD CENTER/ SAFETY SWITCH	AT&T RADIO #1	(2) #12 CU THHN/THWN-2 (1) #12 CU EGC
4	AC LOAD CENTER/ SAFETY SWITCH	AT&T RADIO #2	(2) #12 CU THHN/THWN-2 (1) #12 CU EGC
5	AC LOAD CENTER/ SAFETY SWITCH	AT&T RADIO #3	(2) #12 CU THHN/THWN-2 (1) #12 CU EGC

TABLE 1

120VAC FEEDER CONDUCTOR MAXIMUM DISTANCE		
#10 CU AWG	<400'-0"	3% VOLT DROP @ 3.75A
#8 CU AWG	400' - 615'	3% VOLT DROP @ 3.75A
#6 CU AWG	615' - 980'	3% VOLT DROP @ 3.75A
#4 CU AWG	980' - 1550'	3% VOLT DROP @ 3.75A
#3 CU AWG	1550' - 1920'	3% VOLT DROP @ 3.75A
#2 CU AWG	1920' - 2530'	3% VOLT DROP @ 3.75A

Site Name:	1921 TROPICAL BREEZE DR						**MODEL NUMBER:**		*PACTECHSOL PTS90123*								
SITE NUMBER:	NVL08340F_R03						**PHASE:**		1			**WIRE:**			3		
VOLTAGE:		120		Volts AC			**BUSS RATING:**		40	AMPS							
MAIN BREAKER:		30	AMPS														
MOUNT:		*SURFACE*															
ENCLOSURE TYPE:		*NEMA 3R*															
PANEL STATUS:		*PROPOSED*															
CKT	**LOAD DESCRIPTION**	**BREAKER AMPS**	**BREAKER POLES**	**BREAKER STATUS**	**SERVICE LOAD VA**	**Demand Factor**	**USAGE FACTOR**	**PHASE A VA**	**PHASE B VA**	**USAGE FACTOR**	**Demand Factor**	**SERVICE LOAD VA**	**BREAKER STATUS**	**BREAKER POLES**	**BREAKER AMPS**	**LOAD DESCRIPTION**	**CKT**
1	NOKIA AIRSCALE MICRO B25/B66 RRH	5	1	NEW	150	1.00	1.00	*150*									2
2									*0*								4
3	NOKIA AIRSCALE MICRO B25/B66 RRH	5	1	NEW	150	1.00	1.00	*150*									6
4									*0*								8
5	NOKIA AIRSCALE MICRO B25/B66 RRH	5	1	NEW	150	1.00	1.00	*150*									10
								PHASE A	*PHASE B*								
	1. PANEL SCHEDULE LOADING AND CIRCUIT ARRANGEMENTS REFLECT POST-CONSTRUCTION EQUIPMENT.							*450*	*0*	VA							
									TOTAL	KVA	0.45						
										AMPS	3.75	≤ 80% OF MAIN BREAKER					

ELECTRICAL ONE-LINE DIAGRAM (PICO) | NO SCALE | 1

NOT USED | NO SCALE | 2

at&t

AT&T MOBILITY
10550 W. CHARLESTON
SUITE B
LAS VEGAS, NV 89135

BLACK & VEATCH

BLACK & VEATCH CORPORATION
8965 S EASTERN AVE
SUITE #325
LAS VEGAS, NV 89123

PROJECT NO:	129084.1521
DRAWN BY:	VIG
CHECKED BY:	GAC

REV	DATE	DESCRIPTION
0	06/11/19	ISSUED FOR CONSTRUCTION

PROFESSIONAL ENGINEER STATE OF NEVADA DAVID C. HINTON EXP. 6/30/2021 ELECTRICAL No. 025351

6/11/19

IT IS A VIOLATION OF LAW FOR ANY PERSON, UNLESS THEY ARE ACTING UNDER THE DIRECTION OF A LICENSED PROFESSIONAL ENGINEER, TO ALTER THIS DOCUMENT.

NVL08340F_R03
INTERSECTION OF
1921 TROPICAL BREEZE DR
LAS VEGAS, NV 89117
PICO SMALL CELL

SHEET TITLE

ELECTRICAL ONE-LINE DIAGRAM

SHEET NUMBER

E-3

NOTES

1. FOR CONDUIT SIZE AND WIRING REQUIREMENTS FOR STREETLIGHT SERVICE, SEE STANDARD DRAWING NO. 332.S2 FOR LAS VEGAS AND CLARK COUNTY ONLY AND 332.S1 FOR ALL OTHER ENTITIES.
2. SEE STANDARD DRAWING NO. 321, 332.S1, OR 332.S2.

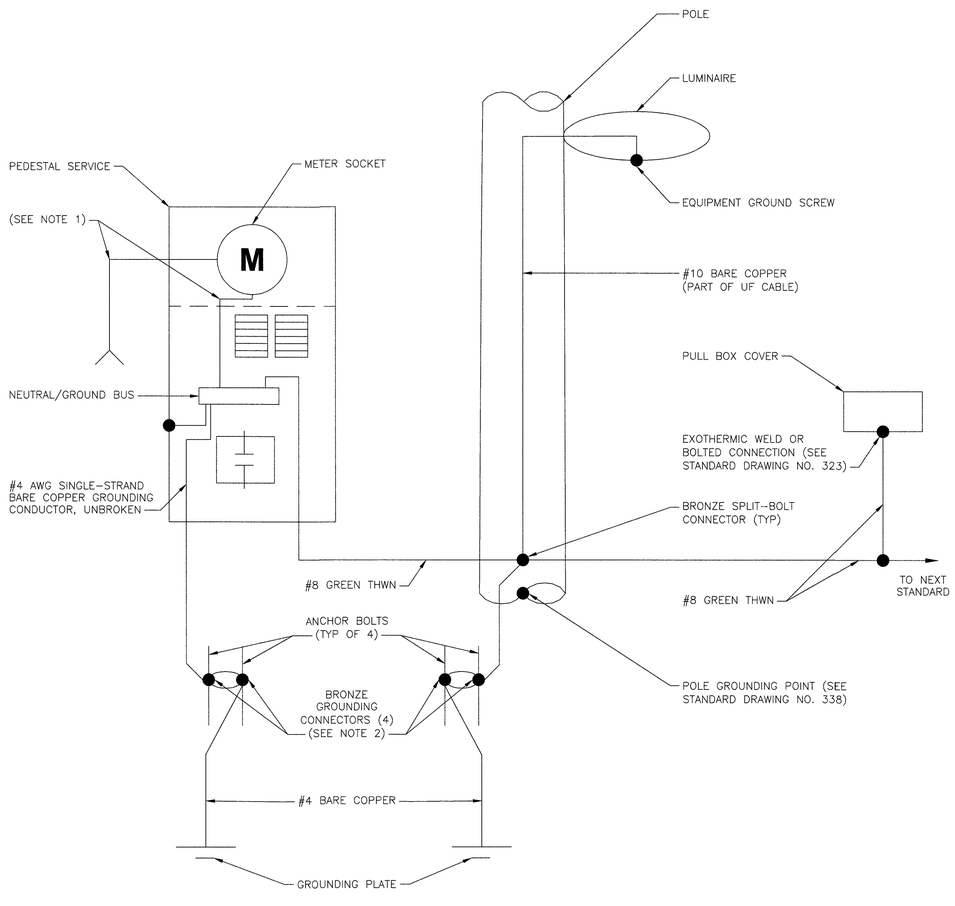

METER PEDESTAL GROUNDING DIAGRAM | NO SCALE | 1

NOTES

1. 125 AMP SERVICE: 1 #4 WHITE THW
   200 AMP SERVICE: 1 #1/0 WHITE THW

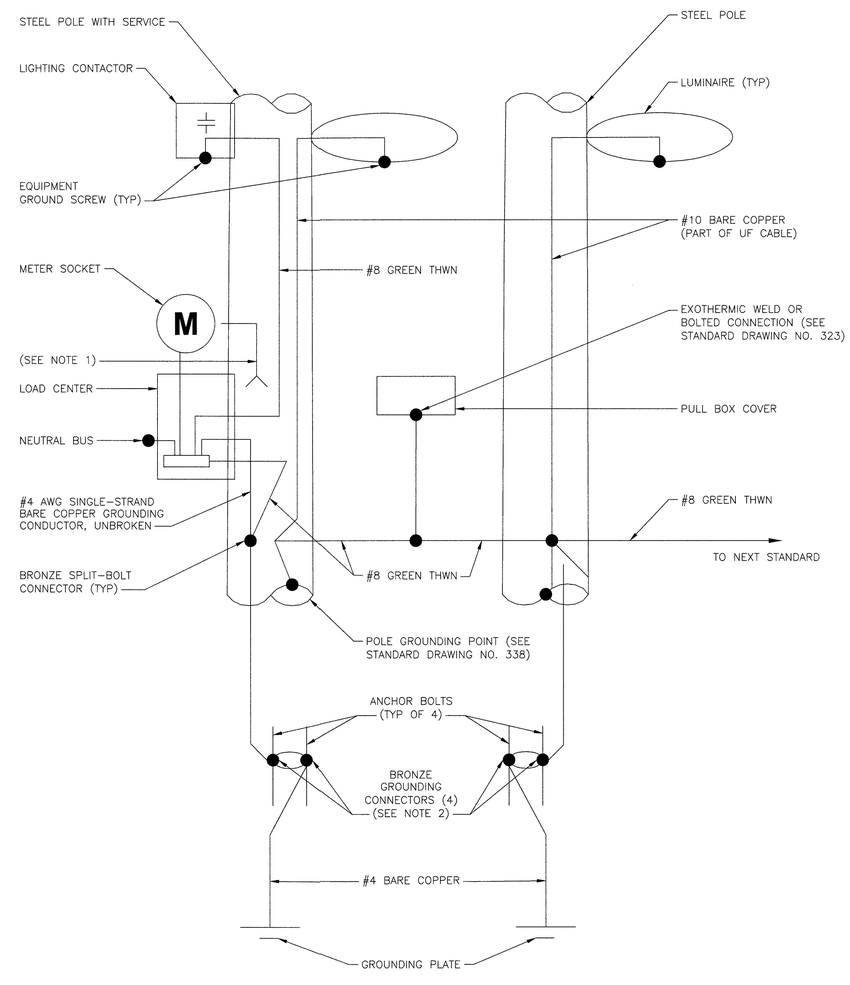

POLE EQUIPMENT GROUNDING DIAGRAM | NO SCALE | 2

at&t

AT&T MOBILITY
10550 W. CHARLESTON
SUITE B
LAS VEGAS, NV 89135

BLACK & VEATCH

BLACK & VEATCH CORPORATION
8965 S EASTERN AVE
SUITE #325
LAS VEGAS, NV 89123

PROJECT NO:	129084.1521
DRAWN BY:	VIG
CHECKED BY:	GAC

REV	DATE	DESCRIPTION
0	06/11/19	ISSUED FOR CONSTRUCTION

PROFESSIONAL ENGINEER - STATE OF NEVADA
DAVID C. HINTON
EXP. 6/30/2021
ELECTRICAL
No. 02535

6/11/19

IT IS A VIOLATION OF LAW FOR ANY PERSON, UNLESS THEY ARE ACTING UNDER THE DIRECTION OF A LICENSED PROFESSIONAL ENGINEER, TO ALTER THIS DOCUMENT.

NVL08340F_R03
INTERSECTION OF
1921 TROPICAL BREEZE DR
LAS VEGAS, NV 89117
PICO SMALL CELL

SHEET TITLE

GROUNDING DIAGRAMS

SHEET NUMBER

G-1

1. FOR THE PURPOSE OF CONSTRUCTION DRAWINGS, THE FOLLOWING DEFINITIONS SHALL APPLY:
   GENERAL CONTRACTOR – OVERLAND CONTRACTING INC. (B&V)
   SUBCONTRACTOR – CONTRACTOR (CONSTRUCTION)
   OWNER – AT&T
2. ALL SITE WORK SHALL BE COMPLETED AS INDICATED ON THE DRAWINGS.
3. GENERAL CONTRACTOR AND SUBCONTRACTOR SHALL VISIT THE SITE AND SHALL BECOME FAMILIAR WITH ALL CONDITIONS AFFECTING THE PROPOSED WORK AND SHALL MAKE PROVISIONS. GENERAL CONTRACTOR AND SUBCONTRACTOR SHALL BE RESPONSIBLE FOR FAMILIARIZING HIMSELF WITH ALL CONTRACT DOCUMENTS, FIELD CONDITIONS, DIMENSIONS, AND CONFIRMING THAT THE WORK MAY BE ACCOMPLISHED AS SHOWN PRIOR TO PROCEEDING WITH CONSTRUCTION. ANY DISCREPANCIES SHALL BE BROUGHT TO THE ATTENTION OF THE ENGINEER PRIOR TO THE COMMENCEMENT OF WORK.
4. ALL MATERIALS FURNISHED AND INSTALLED SHALL BE IN STRICT ACCORDANCE WITH ALL APPLICABLE CODES, REGULATIONS, AND ORDINANCES. GENERAL CONTRACTOR SHALL ISSUE ALL APPROPRIATE NOTICES AND COMPLY WITH ALL LAWS, ORDINANCES, RULES, REGULATIONS, AND LAWFUL ORDERS OF ANY PUBLIC AUTHORITY REGARDING THE PERFORMANCE OF WORK.
5. ALL WORK CARRIED OUT SHALL COMPLY WITH ALL APPLICABLE MUNICIPAL AND UTILITY COMPANY SPECIFICATIONS AND LOCAL JURISDICTIONAL CODES, ORDINANCES, AND APPLICABLE REGULATIONS.
6. UNLESS NOTED OTHERWISE, THE WORK SHALL INCLUDE FURNISHING MATERIALS, EQUIPMENT, APPURTENANCES, AND LABOR NECESSARY TO COMPLETE ALL INSTALLATIONS AS INDICATED ON THE DRAWINGS.
7. PLANS ARE NOT TO BE SCALED. THESE PLANS ARE INTENDED TO BE A DIAGRAMMATIC OUTLINE ONLY UNLESS OTHERWISE NOTED. DIMENSIONS SHOWN ARE TO FINISH SURFACES UNLESS OTHERWISE NOTED. SPACING BETWEEN EQUIPMENT IS THE MINIMUM REQUIRED CLEARANCE. THEREFORE, IT IS CRITICAL TO FIELD VERIFY DIMENSIONS, SHOULD THERE BE ANY QUESTIONS REGARDING THE CONTRACT DOCUMENTS, THE SUBCONTRACTOR SHALL BE RESPONSIBLE FOR OBTAINING A CLARIFICATION FROM THE ENGINEER PRIOR TO PROCEEDING WITH THE WORK. DETAILS ARE INTENDED TO SHOWN DESIGN INTENT. MODIFICATIONS MAY BE REQUIRED TO SUIT JOB DIMENSIONS OR CONDITIONS AND SUCH MODIFICATIONS SHALL BE INCLUDED AS PART OF WORK AND PREPARED BY THE ENGINEER PRIOR TO PROCEEDING WITH WORK.
8. THE SUBCONTRACTOR SHALL INSTALL ALL EQUIPMENT AND MATERIALS IN ACCORDANCE WITH MANUFACTURER'S RECOMMENDATIONS UNLESS SPECIFICALLY STATED OTHERWISE.
9. IF THE SPECIFIED EQUIPMENT CANNOT BE INSTALLED AS SHOWN ON THESE DRAWINGS, THE SUBCONTRACTOR SHALL PROPOSE AN ALTERNATIVE INSTALLATION SPACE FOR APPROVAL BY THE ENGINEER AND DSA PRIOR TO PROCEEDING.
10. GENERAL CONTRACTOR SHALL BE RESPONSIBLE FOR THE SAFETY OF WORK AREA, ADJACENT AREAS AND BUILDING OCCUPANTS THAT ARE LIKELY TO BE AFFECTED BY THE WORK UNDER THIS CONTRACT. WORK SHALL CONFORM TO ALL OSHA REQUIREMENTS AND THE LOCAL JURISDICTION.
11. GENERAL CONTRACTOR SHALL COORDINATE WORK AND SCHEDULE WORK ACTIVITIES WITH OTHER DISCIPLINES.
12. ERECTION SHALL BE DONE IN A WORKMANLIKE MANNER BY COMPETENT EXPERIENCED WORKMAN IN ACCORDANCE WITH APPLICABLE CODES AND THE BEST ACCEPTED PRACTICE. ALL MEMBERS SHALL BE LAID PLUMB AND TRUE AS INDICATED ON THE DRAWINGS.
13. SEAL ANY PENETRATION WITH UL LISTED MATERIALS APPROVED BY LOCAL JURISDICTION. SUBCONTRACTOR SHALL KEEP AREA CLEAN, HAZARD FREE, AND DISPOSE OF ALL DEBRIS.
14. WORK PREVIOUSLY COMPLETED IS REPRESENTED BY LIGHT SHADED LINES AND NOTES. THE SCOPE OF WORK FOR THIS PROJECT IS REPRESENTED BY DARK SHADED LINES AND NOTES. SUBCONTRACTOR SHALL NOTIFY THE GENERAL CONTRACTOR OF ANY EXISTING CONDITIONS THAT DEVIATE FROM THE DRAWINGS PRIOR TO BEGINNING CONSTRUCTION.
15. SUBCONTRACTOR SHALL PROVIDE WRITTEN NOTICE TO THE CONSTRUCTION MANAGER 48 HOURS PRIOR TO COMMENCEMENT OF WORK.
16. THE SUBCONTRACTOR SHALL PROTECT EXISTING IMPROVEMENTS, PAVEMENTS, CURBS, LANDSCAPING AND STRUCTURES. ANY DAMAGED PART SHALL BE REPAIRED AT SUBCONTRACTOR'S EXPENSE TO THE SATISFACTION OF THE OWNER.
17. THE SUBCONTRACTOR SHALL CONTACT UTILITY LOCATING SERVICES PRIOR TO THE START OF CONSTRUCTION.
18. GENERAL CONTRACTOR SHALL COORDINATE AND MAINTAIN ACCESS FOR ALL TRADES AND SUBCONTRACTORS TO THE SITE AND/OR BUILDING.
19. THE GENERAL CONTRACTOR SHALL BE RESPONSIBLE FOR SECURITY OF THE SITE FOR THE DURATION OF CONSTRUCTION UNTIL JOB COMPLETION.
20. THE GENERAL CONTRACTOR SHALL MAINTAIN IN GOOD CONDITION ONE COMPLETE SET OF PLANS WITH ALL REVISIONS, ADDENDA, AND CHANGE ORDERS ON THE PREMISES AT ALL TIMES.
21. THE GENERAL CONTRACTOR AND SUBCONTRACTOR SHALL PROVIDE PORTABLE FIRE EXTINGUISHERS WITH A RATING OF NOT LESS THAN 2–A OT 2–A:10–B:C AND SHALL BE WITHIN 25 FEET OF TRAVEL DISTANCE TO ALL PORTIONS OF WHERE THE WORK IS BEING COMPLETED DURING CONSTRUCTION.
22. ALL EXISTING ACTIVE SEWER, WATER, GAS, ELECTRIC, AND OTHER UTILITIES SHALL BE PROTECTED AT ALL TIMES, AND WHERE REQUIRED FOR THE PROPER EXECUTION OF THE WORK, SHALL BE RELOCATED AS DIRECTED BY THE ENGINEER. EXTREME CAUTION SHOULD BE USED BY THE SUBCONTRACTOR WHEN EXCAVATING OR DRILLING PIERS AROUND OR NEAR UTILITIES. SUBCONTRACTOR SHALL PROVIDE SAFETY TRAINING FOR THE WORKING CREW. THIS SHALL INCLUDE BUT NOT BE LIMITED TO A) FALL PROTECTION, B) CONFINED SPACE, C) ELECTRICAL SAFETY, AND D) TRENCHING & EXCAVATION.
23. ALL EXISTING INACTIVE SEWER, WATER, GAS, ELECTRIC AND OTHER UTILITIES, WHICH INTERFERE WITH THE EXECUTION OF THE WORK, SHALL BE REMOVED, CAPPED, PLUGGED OR OTHERWISE DISCONNECTED AT POINTS WHICH WILL NOT INTERFERE WITH THE EXECUTION OF THE WORK, AS DIRECTED BY THE RESPONSIBLE ENGINEER, AND SUBJECT TO THE APPROVAL OF THE OWNER AND/OR LOCAL UTILITIES.
24. THE AREAS OF THE OWNER'S PROPERTY DISTURBED BY THE WORK AND NOT COVERED BY THE TOWER, EQUIPMENT OR DRIVEWAY, SHALL BE GRADED TO A UNIFORM SLOPE, AND STABILIZED TO PREVENT EROSION.
25. SUBCONTRACTOR SHALL MINIMIZE DISTURBANCE TO THE EXISTING SITE DURING CONSTRUCTION. EROSION CONTROL MEASURES, IF REQUIRED DURING CONSTRUCTION, SHALL BE IN CONFORMANCE WITH THE FEDERAL AND LOCAL JURISDICTION FOR EROSION AND SEDIMENT CONTROL.
26. NO FILL OR EMBANKMENT MATERIAL SHALL BE PLACED ON FROZEN GROUNDING. FROZEN MATERIALS, SNOW OR ICE SHALL NOT BE PLACED IN ANY FILL OR EMBANKMENT.
27. THE SUBGRADE SHALL BE BROUGHT TO A SMOOTH UNIFORM GRADE AND COMPACTED TO 95 PERCENT STANDARD PROCTOR DENSITY UNDER PAVEMENT AND STRUCTURES AND 80 PERCENT STANDARD PROCTOR DENSITY IN OPEN SPACE. ALL TRENCHES IN PUBLIC RIGHT OF WAY SHALL BE BACKFILLED WITH FLOWABLE FILL OR OTHER MATERIAL PRE–APPROVED BY THE LOCAL JURISDICTION.
28. ALL NECESSARY RUBBISH, STUMPS, DEBRIS, STICKS, STONES, AND OTHER REFUSE SHALL BE REMOVED FROM THE SITE AND DISPOSED OF IN A LAWFUL MANNER.
29. ALL BROCHURES, OPERATING AND MAINTENANCE MANUALS, CATALOGS, SHOP DRAWINGS, AND OTHER DOCUMENTS SHALL BE TURNED OVER TO THE GENERAL CONTRACTOR AT COMPLETION OF CONSTRUCTION AND PRIOR TO PAYMENT.
30. CONTRACTOR SHALL SUBMIT A COMPLETE SET OF AS–BUILT REDLINES TO THE GENERAL CONTRACTOR UPON COMPLETION OF PROJECT AND PRIOR TO FINAL PAYMENT.
31. CONTRACTOR SHALL LEAVE PREMISES IN A CLEAN CONDITION.
32. THE PROPOSED FACILITY WILL BE UNMANNED AND DOES NOT REQUIRE POTABLE WATER OR SEWER SERVICE, AND IS NOT FOR HUMAN HABITAT (NO HANDICAP ACCESS REQUIRED).
33. OCCUPANCY IS LIMITED TO PERIODIC MAINTENANCE AND INSPECTION, APPROXIMATELY 2 TIMES PER MONTH, BY AT&T TECHNICIANS.
34. NO OUTDOOR STORAGE OR SOLID WASTE CONTAINERS ARE PROPOSED.
35. ALL MATERIAL SHALL BE FURNISHED AND WORK SHALL BE PERFORMED IN ACCORDANCE WITH THE LATEST REVISION AT&T MOBILITY GROUNDING STANDARD "TECHNICAL SPECIFICATION FOR CONSTRUCTION OF GSM/GPRS WIRELESS SITES" AND "TECHNICAL SPECIFICATION FOR FACILITY GROUNDING". IN CASE OF A CONFLICT BETWEEN THE CONSTRUCTION SPECIFICATION AND THE DRAWINGS, THE DRAWINGS SHALL GOVERN.
36. CONTRACTORS SHALL BE RESPONSIBLE FOR OBTAINING ALL PERMITS AND INSPECTIONS REQUIRED FOR CONSTRUCTION. IF CONTRACTOR CANNOT OBTAIN A PERMIT, THEY MUST NOTIFY THE GENERAL CONTRACTOR IMMEDIATELY.
37. CONTRACTOR SHALL REMOVE ALL TRASH AND DEBRIS FROM THE SITE ON A DAILY BASIS.
38. INFORMATION SHOWN ON THESE DRAWINGS WAS OBTAINED FROM SITE VISITS AND/OR DRAWINGS PROVIDED BY THE SITE OWNER. CONTRACTORS SHALL NOTIFY THE ENGINEER OF ANY DISCREPANCIES PRIOR TO ORDERING MATERIAL OR PROCEEDING WITH CONSTRUCTION.
39. NO WHITE STROBE LIGHTS ARE PERMITTED. LIGHTING IF REQUIRED, WILL MEET FAA STANDARDS AND REQUIREMENTS.
40. ALL COAXIAL CABLE INSTALLATIONS TO FOLLOW MANUFACTURER'S INSTRUCTIONS AND RECOMMENDATIONS.
41. CONTRACTOR TO ENSURE LOCATES ARE COMPLETED PRIOR TO DIGGING IN THE ROW. IF UTILITIES ARE INDICATED WITHIN 3 FEET OF THE PROPOSED ROUTE, OR IF CROSSING EXISTING UTILITY, CONTRACTOR TO POTHOLE EXISTING UTILITY TO DETERMINE DEPTH AND EXACT LOCATION PRIOR TO CONSTRUCTION. IF UTILITY IS DAMAGED DURING THE INSTALLATION OF THE NEW CONDUIT, IT SHALL BE THE CONTRACTORS RESPONSIBILITY TO CONTACT THE UTILITY IMMEDIATELY AND IT IS ALSO THE CONTRACTORS RESPONSIBILITY TO HAVE ANY DAMAGE FIXED AND/OR REPAIRED PRIOR TO CLOSING THE EXCAVATION.

GENERAL NOTES

EXOTHERMIC CONNECTION
MECHANICAL CONNECTION
CHEMICAL ELECTROLYTIC GROUNDING SYSTEM
TEST CHEMICAL ELECTROLYTIC GROUNDING SYSTEM
EXOTHERMIC WITH INSPECTION SLEEVE
GROUNDING BAR
GROUND ROD
TEST GROUND ROD WITH INSPECTION SLEEVE
SINGLE POLE SWITCH
DUPLEX RECEPTACLE
DUPLEX GFCI RECEPTACLE
FLUORESCENT LIGHTING FIXTURE (2) TWO LAMPS 48–T8
SMOKE DETECTION (DC)
EMERGENCY LIGHTING (DC)
SECURITY LIGHT W/PHOTOCELL LITHONIA ALXW LED–1–25A400/51K–SR4–120–PE–DDBTXD
CHAIN LINK FENCE
WOOD/WROUGHT IRON FENCE
WALL STRUCTURE
LEASE AREA
PROPERTY LINE (PL)
SETBACKS
ICE BRIDGE
CABLE TRAY
WATER LINE
UNDERGROUND POWER
UNDERGROUND TELCO
OVERHEAD POWER
OVERHEAD TELCO
UNDERGROUND TELCO/POWER
ABOVE GROUND POWER
ABOVE GROUND TELCO
ABOVE GROUND TELCO/POWER
ABOVE GROUND FIBER
ABOVE GROUND FIBER/POWER
UNDERGROUND FIBER
UNDERGROUND FIBER/POWER
UNDERGROUND DUCT
ABOVE GROUND POWER/AC
ABOVE GROND POWER/DC
SECTION REFERENCE
DETAIL REFERENCE
ELEVATION REFERENCE
BREAKLINE

LEGEND

AB	ANCHOR BOLT
ABV	ABOVE
AC	ALTERNATING CURRENT
ADDL	ADDITIONAL
AFF	ABOVE FINISHED FLOOR
AFG	ABOVE FINISHED GRADE
AIC	AMPERAGE INTERRUPTION CAPACITY
ALUM	ALUMINUM
ALT	ALTERNATE
ANT	ANTENNA
APPROX	APPROXIMATE
ARCH	ARCHITECTURAL
ATS	AUTOMATIC TRANSFER SWITCH
AWG	AMERICAN WIRE GAUGE
BATT	BATTERY
BLDG	BUILDING
BLK	BLOCK
BLKG	BLOCKING
BM	BEAM
BTC	BARE TINNED COPPER CONDUCTOR
BOF	BOTTOM OF FOOTING
CAB	CABINET
CANT	CANTILEVERED
CEC	CALIFORNIA ELECTRIC CODE
CHG	CHARGING
CLG	CEILING
CLR	CLEAR
COL	COLUMN
COMM	COMMON
CONC	CONCRETE
CONSTR	CONSTRUCTION
DBL	DOUBLE
DC	DIRECT CURRENT
DEPT	DEPARTMENT
DF	DOUGLAS FIR
DIA	DIAMETER
DIAG	DIAGONAL
DIM	DIMENSION
DWG	DRAWING
DWL	DOWEL
(E)	EXISTING
EA	EACH
EC	ELECTRICAL CONDUCTOR
EL	ELEVATION
ELEC	ELECTRICAL
EMT	ELECTRICAL METALLIC TUBING
ENG	ENGINEER
EQ	EQUAL
EXP	EXPANSION
EXT	EXTERIOR
FAB	FABRICATION
FF	FINISH FLOOR
FG	FINISH GRADE
FIF	FACILITY INTERFACE FRAME
FIN	FINISH(ED)
FLR	FLOOR
FDN	FOUNDATION
FOC	FACE OF CONCRETE
FOM	FACE OF MASONRY
FOS	FACE OF STUD
FOW	FACE OF WALL
FS	FINISH SURFACE
FT	FOOT
FTG	FOOTING
GA	GAUGE
GEN	GENERATOR
GFCI	GROUND FAULT CIRCUIT INTERRUPTER
GLB	GLUE LAMINATED BEAM
GLV	GALVANIZED
GPS	GLOBAL POSITIONING SYSTEM
GND	GROUND
GSM	GLOBAL SYSTEM FOR MOBILE
HDR	HEADER
HGR	HANGER
HVAC	HEAT/VENTILATION/AIR CONDITIONING
HT	HEIGHT
IGR	INTERIOR GROUND RING
IN	INCH
INT	INTERIOR
LB(S)	POUND(S)
LF	LINEAR FEET
LTE	LONG TERM EVOLUTION
MAS	MASONRY
MAX	MAXIMUM
MB	MACHINE BOLT
MECH	MECHANICAL
MFR	MANUFACTURER
MGB	MASTER GROUND BAR
MIN	MINIMUM
MISC	MISCELLANEOUS
MTL	METAL
MTS	MANUAL TRANSFER SWITCH
MW	MICROWAVE
(N)	NEW
NEC	NATIONAL ELECTRIC CODE
NO.(#)	NUMBER
NTS	NOT TO SCALE
OC	ON CENTER
OPNG	OPENING
(P)	PROPOSED
P/C	PRECAST CONCRETE
PCS	PERSONAL COMMUNICATION SERVICES
PCU	PRIMARY CONTROL UNIT
PRC	PRIMARY RADIO CABINET
PP	POLARIZING PRESERVING
PSF	POUNDS PER SQUARE FOOT
PSI	POUNDS PER SQUARE INCH
PT	PRESSURE TREATED
PWR	POWER CABINET
QTY	QUANTITY
RAD	RADIUS
RECT	RECTIFIER
REF	REFERENCE
REINF	REINFORCEMENT
REQ'D	REQUIRED
RET	REMOTE ELECTRIC TILT
RMC	RIGID METALLIC CONDUIT
RRH	REMOTE RADIO HEAD
RRU	REMOTE RADIO UNIT
RWY	RACEWAY
SCH	SCHEDULE
SHT	SHEET
SIAD	SMART INTEGRATED DEVICE
SIM	SIMILAR
SPEC	SPECIFICATION
SQ	SQUARE
SS	STAINLESS STEEL
STD	STANDARD
STL	STEEL
STRUCT	STRUCTURAL
TEMP	TEMPORARY
THK	THICKNESS
TMA	TOWER MOUNTED AMPLIFIER
TN	TOE NAIL
TOA	TOP OF ANTENNA
TOC	TOP OF CURB
TOF	TOP OF FOUNDATION
TOP	TOP OF PLATE (PARAPET)
TOS	TOP OF STEEL
TOW	TOP OF WALL
TVSS	TRANSIENT VOLTAGE SUPPRESSION SYSTEM
TYP	TYPICAL
UG	UNDERGROUND
UL	UNDERWRITERS LABORATORY
UNO	UNLESS NOTED OTHERWISE
UMTS	UNIVERSAL MOBILE TELECOMMUNICATIONS SYSTEM
UPS	UNITERRUPTIBLE POWER SYSTEM (DC POWER PLANT)
VIF	VERIFIED IN FIELD
W	WIDE
W/	WITH
WD	WOOD
W.P.	WORK POINT
WP	WEATHERPROOF
WT	WEIGHT

ABBREVIATIONS

at&t

AT&T MOBILITY
10550 W. CHARLESTON
SUITE B
LAS VEGAS, NV 89135

BLACK & VEATCH

BLACK & VEATCH CORPORATION
8965 S EASTERN AVE
SUITE #325
LAS VEGAS, NV 89123

PROJECT NO:	129084.1521
DRAWN BY:	VIG
CHECKED BY:	GAC

REV	DATE	DESCRIPTION
0	06/11/19	ISSUED FOR CONSTRUCTION

PROFESSIONAL ENGINEER – STATE OF NEVADA
HYUN KIM
Exp. 06-30-21
STRUCTURAL
No. 026569

IT IS A VIOLATION OF LAW FOR ANY PERSON, UNLESS THEY ARE ACTING UNDER THE DIRECTION OF A LICENSED PROFESSIONAL ENGINEER, TO ALTER THIS DOCUMENT.

NVL08340F_R03
INTERSECTION OF
1921 TROPICAL BREEZE DR
LAS VEGAS, NV 89117
PICO SMALL CELL

SHEET TITLE
GENERAL NOTES, LEGEND AND ABBREVIATIONS

SHEET NUMBER
GN-1

PART 1 – GENERAL

1.1 GENERAL CONDITIONS:

A. CONTRACTOR SHALL INSPECT THE EXISTING SITE CONDITIONS PRIOR TO SUBMITTING BID. ANY QUESTIONS ARISING DURING THE BID PERIOD IN REGARDS TO THE SUBCONTRACTORS FUNCTIONS, THE SCOPE OF WORK, OR ANY OTHER ISSUE RELATED TO THIS PROJECT SHALL BE BROUGHT UP DURING THE BID PERIOD WITH THE PROJECT MANAGER FOR CLARIFICATION, NOT AFTER THE CONTRACT HAS BEEN AWARDED.

B. THE SUBCONTRACTOR SHALL OBTAIN PERMITS, LICENSES, MAKE ALL DEPOSITS, AND PAY ALL FEES REQUIRED FOR THE CONSTRUCTION PERFORMANCE FOR THE WORK UNDER THIS SECTION.

C. DRAWINGS SHOW THE GENERAL ARRANGEMENT OF ALL SYSTEMS AND COMPONENTS COVERED UNDER THIS SECTION. THE SUBCONTRACTOR SHALL VERIFY ALL DIMENSIONS. DRAWING SHALL NOT BE SCALED TO DETERMINE DIMENSIONS.

1.2 LAWS, REGULATIONS, ORDINANCES, STATUTES AND CODES.

A. ALL WORK SHALL BE INSTALLED IN ACCORDANCE WITH THE 2013 EDITION OF THE CALIFORNIA ELECTRICAL CODE, AND ALL APPLICABLE LOCAL LAWS, REGULATIONS, ORDINANCES, STATUTES AND CODES. CONDUIT BENDS SHALL BE THE RADIUS BEND FOR THE TRADE SIZE OF CONDUIT IN COMPLIANCE WITH THE 2013 EDITION OF CEC.

1.3 REFERENCES:

A. THE PUBLICATIONS LISTED BELOW ARE PART OF THIS SPECIFICATION. EACH PUBLICATION SHALL BE THE LATEST REVISION AND ADDENDUM IN EFFECT ON THE DATE. THIS SPECIFICATION IS ISSUED FOR CONSTRUCTION UNLESS OTHERWISE NOTED. EXCEPT AS MODIFIED BY THE REQUIREMENT SPECIFIED HEREIN OR THE DETAILS OF THE DRAWINGS, WORK INCLUDED IN THIS SPECIFICATION SHALL CONFORM TO THE APPLICABLE PROVISION OF THESE PUBLICATIONS.

1. ANSI/IEEE (AMERICAN NATIONAL STANDARDS INSTITUTE)
2. ASTM (AMERICAN SOCIETY FOR TESTING AND MATERIALS)
3. ICE (INSULATED CABLE ENGINEERS ASSOCIATION)
4. NEMA (NATIONAL ELECTRICAL MANUFACTURER'S ASSOCIATION)
5. NFPA (NATIONAL FIRE PROTECTION ASSOCIATION)
6. OSHA (OCCUPATIONAL SAFETY AND HEALTH ADMINISTRATION)
7. UL (UNDERWRITERS LABORATORIES, INC.)
8. AT&T GROUNDING AND BONDING STANDARDS TP–76416

1.4 SCOPE OF WORK:

A. WORK UNDER THIS SECTION SHALL CONSIST OF FURNISHING ALL LABOR, MATERIAL, AND ASSOCIATED SERVICES REQUIRED TO COMPLETE REQUIRED CONSTRUCTION AND BE OPERATIONAL.

B. ALL ELECTRICAL EQUIPMENT UNDER THIS CONTRACT SHALL BE PROPERLY TESTED, ADJUSTED, AND ALIGNED BY THE SUBCONTRACTOR

C. THE SUBCONTRACTOR SHALL BE RESPONSIBLE FOR ALL EXCAVATING, DRAINING, TRENCHES, BACKFILLING, AND REMOVAL OF EXCESS DIRT.

D. THE SUBCONTRACTOR SHALL FURNISH TO THE OWNER WITH CERTIFICATES OF A FINAL INSPECTION AND APPROVAL FROM THE INSPECTION AUTHORITIES HAVING JURISDICTION.

E. THE SUBCONTRACTOR SHALL PREPARE A COMPLETE SET OF AS–BUILT DRAWINGS, DOCUMENT ALL WIRING EQUIPMENT CONDITIONS, AND CHANGES WHILE COMPLETING THIS CONTRACT. THE AS–BUILT DRAWINGS SHALL BE SUBMITTED AT COMPLETION OF THE PROJECT.

PART 2 – PRODUCTS

2.1 GENERAL:

A. ALL MATERIALS AND EQUIPMENT SHALL BE UL LISTED, NEW, AND FREE FROM DEFECTS.

B. ALL ITEMS OF MATERIALS AND EQUIPMENT SHALL BE ACCEPTABLE TO THE AUTHORITY HAVING JURISDICTION AS SUITABLE FOR THE USE INTENDED.

C. ALL EQUIPMENT SHALL BEAR THE UNDERWRITERS LABORATORIES LABEL OF APPROVAL, AND SHALL CONFORM TO REQUIREMENT OF THE CALIFORNIA ELECTRICAL CODE.

D. ALL OVERCURRENT DEVICES SHALL HAVE AN INTERRUPTING CURRENT RATING EQUAL TO OR GREATER THAN THE SHORT CIRCUIT CURRENT TO WHICH THEY ARE SUBJECTED, 10,000 AIC MINIMUM. VERIFY AVAILABLE SHORT CIRCUIT CURRENT DOES NOT EXCEED THE RATING OF ELECTRICAL EQUIPMENT.

2.2 MATERIALS AND EQUIPMENT:

A. CONDUIT:

1. RIGID METAL CONDUIT (RMC) SHALL BE HOT–DIPPED GALVANIZED INSIDE AND OUTSIDE INCLUDING ENDS AND THREADS AND ENAMELED OR LACQUERED INSIDE IN ADDITION TO GALVANIZING.

2. LIQUIDTIGHT FLEXIBLE METAL CONDUIT SHALL BE UL LISTED.

3. CONDUIT CLAMPS, STRAPS AND SUPPORTS SHALL BE STEEL OR MALLEABLE IRON. ALL FITTINGS SHALL BE COMPRESSION AND CONCRETE TIGHT TYPE. GROUNDING BUSHINGS WITH INSULATED THROATS SHALL BE INSTALLED ON ALL CONDUIT TERMINATIONS.

4. NONMETALLIC CONDUIT AND FITTINGS SHALL BE SCHEDULE 40 PVC. INSTALL USING SOLVENT–CEMENT–TYPE JOINTS AS RECOMMENDED BY THE MANUFACTURER.

B. CONDUCTORS AND CABLE:

1. CONDUCTORS AND CABLE SHALL BE FLAME–RETARDANT, MOISTURE AND HEAT RESISTANT THERMOPLASTIC, SINGLE CONDUCTOR, COPPER, TYPE THHN/THWN–2, 600 VOLT, SIZE AS INDICATED, #12 AWG SHALL BE THE MINIMUM SIZE CONDUCTOR USED.

2. #10 AWG AND SMALLER CONDUCTOR SHALL BE SOLID OR STRANDED AND #8 AWG AND LARGER CONDUCTORS SHALL BE STRANDED.

3. SOLDERLESS, COMPRESSION–TYPE CONNECTORS SHALL BE USED FOR TERMINATION OF ALL STRANDED CONDUCTORS.

4. STRAIN–RELIEF SUPPORTS GRIPS SHALL BE HUBBELL KELLEMS OR APPROVED EQUAL. CABLES SHALL BE SUPPORTED IN ACCORDANCE WITH THE NEC AND CABLE MANUFACTURER'S RECOMMENDATIONS.

5. ALL CONDUCTORS SHALL BE TAGGED AT BOTH ENDS OF THE CONDUCTOR, AT ALL PULL BOXES, J–BOXES, EQUIPMENT AND CABINETS AND SHALL BE IDENTIFIED WITH APPROVED PLASTIC TAGS (ACTION CRAFT, BRADY, OR APPROVED EQUAL).

C. DISCONNECT SWITCHES:

1. DISCONNECT SWITCHES SHALL BE HEAVY DUTY, DEAD–FRONT, QUICK–MAKE, QUICK–BREAK, EXTERNALLY OPERABLE, HANDLE LOCKABLE AND INTERLOCK WITH COVER IN CLOSED POSITION, RATING AS INDICATED, UL LABELED FURNISHED IN NEMA 3R ENCLOSURE, SQUARE–D OR ENGINEERED APPROVED EQUAL.

D. CHEMICAL ELECTROLYTIC GROUNDING SYSTEM:

1. INSTALL CHEMICAL GROUNDING AS REQUIRED. THE SYSTEM SHALL BE ELECTROLYTIC MAINTENANCE FREE ELECTRODE CONSISTING OF RODS WITH A MINIMUM #2 AWG CU EXOTHERMALLY WELDED PIGTAIL, PROTECTIVE BOXES, AND BACKFILL MATERIAL. MANUFACTURER SHALL BE LYNCOLE XIT GROUNDING ROD TYPES K2–(*)CS OR K2L–(*)CS. (*) 10' OR 20' AS AVAILABLE FROM MANUFACTURER, BUT NOT LESS THAN 8' MIN [REQUIRED PER CEC 250.52 A (5)].

2. GROUND ACCESS BOX SHALL BE A POLYPLASTIC BOX FOR NON–TRAFFIC APPLICATIONS, INCLUDING BOLT DOWN FLUSH COVER WITH "BREATHER" HOLES, XIT MODEL #XB–22. ALL DISCONNECT SWITCHES AND CONTROLLING DEVICES SHALL BE PROVIDED WITH ENGRAVED LAMICOID NAMEPLATES INDICATING EQUIPMENT CONTROLLED, BRANCH CIRCUITS ID NUMBERING, AND THE ELECTRICAL POWER SOURCE.

3. BACKFILL MATERIAL SHALL BE LYNCONITE AND LYNCOLE GROUNDING GRAVEL.

E. SYSTEM GROUNDING:

1. ALL GROUNDING COMPONENTS SHALL BE TINNED AND GROUNDING CONDUCTOR SHALL BE #2 AWG BARE, SOLID, TINNED, COPPER. ABOVE GRADE GROUNDING CONDUCTORS SHALL BE INSULATED WHERE NOTED.

2. GROUNDING BUSES SHALL BE BARE, TINNED, ANNEALED COPPER BARS OF RECTANGULAR CROSS SECTION. STANDARD BUS BARS MGB, SHALL BE FURNISHED AND INSTALLED BY THE SUBCONTRACTOR. THEY SHALL NOT BE FABRICATED OR MODIFIED IN THE FIELD. ALL GROUNDING BUSES SHALL BE IDENTIFIED WITH MINIMUM 3/4" LETTERS BY WAY OF STENCILING OR DESIGNATION PLATE.

3. CONNECTORS SHALL BE HIGH–CONDUCTIVITY, HEAVY DUTY, LISTED AND LABELED AS GROUNDING CONNECTORS FOR THE MATERIALS USED. USE TWO–HOLE COMPRESSION LUGS WITH HEAT SHRINK FOR MECHANICAL CONNECTIONS. INTERIOR CONNECTIONS USE TWO–HOLE COMPRESSION LUGS WITH INSPECTION WINDOW AND CLEAR HEAT SHRINK.

4. EXOTHERMIC WELDED CONNECTIONS SHALL BE PROVIDED IN KIT FORM AND SELECTED FOR THE SPECIFIC TYPES, SIZES, AND COMBINATIONS OF CONDUCTORS AND OTHER ITEMS TO BE CONNECTED.

5. GROUND RODS SHALL BE COPPER–CLAD STEEL WITH HIGH–STRENGTH STEEL CORE AND ELECTROLYTIC–GRADE COPPER OUTER SHEATH, MOLTEN WELDED TO CORE, 5/8"x10'–0". ALL GROUNDING RODS SHALL BE INSTALLED WITH INSPECTION SLEEVES.

6. INSTALL AN EQUIPMENT GROUNDING CONDUCTOR IN ALL CONDUITS IN COMPLIANCE WITH THE AT&T SPECIFICATIONS AND CEC. THE EQUIPMENT GROUNDING CONDUCTORS SHALL BE BONDED AT ALL JUNCTION BOXES, PULLBOXES, DISCONNECT SWITCHES, STARTERS, AND EQUIPMENT CABINETS.

F. OTHER MATERIALS:

1. THE SUBCONTRACTOR SHALL PROVIDE OTHER MATERIALS, THOUGH NOT SPECIFICALLY DESCRIBED, WHICH ARE REQUIRED FOR A COMPLETELY OPERATIONAL SYSTEM AND PROPER INSTALLATION OF THE WORK.

2. PROVIDE PULL BOXES AND JUNCTION BOXES WHERE SHOWN OR REQUIRED BY CEC.

G. PANELS AND LOAD CENTERS:

1. ALL PANEL DIRECTORIES SHALL BE TYPEWRITTEN.

PART 3 – EXECUTION

3.1 GENERAL:

A. ALL MATERIAL AND EQUIPMENT SHALL BE INSTALLED IN STRICT ACCORDANCE WITH THE MANUFACTURER'S RECOMMENDATIONS AND AS SHOWN ON DSA APPROVED DWG'S.

B. EQUIPMENT SHALL BE TIGHTLY COVERED AND PROTECTED AGAINST DIRT OR WATER, AND AGAINST CHEMICAL OR MECHANICAL INJURY DURING INSTALLATION AND CONSTRUCTION PERIODS.

3.2 LABOR AND WORKMANSHIP:

A. ALL LABOR FOR THE INSTALLATION OF MATERIALS AND EQUIPMENT FURNISHED FOR THE ELECTRICAL SYSTEM SHALL BE INSTALLED BY EXPERIENCED WIREMEN, IN A NEAT AND WORKMAN–LIKE MANNER.

B. ALL ELECTRICAL EQUIPMENT SHALL BE ADJUSTED, ALIGNED AND TESTED BY THE SUBCONTRACTOR AS REQUIRED TO PRODUCE THE INTENDED PERFORMANCE.

C. UPON COMPLETION OF WORK, THE SUBCONTRACTOR SHALL THOROUGHLY CLEAN ALL EXPOSED EQUIPMENT, REMOVE ALL LABELS AND ANY DEBRIS, CRATING OR CARTONS AND LEAVE THE INSTALLATION FINISHED AND READY FOR OPERATION.

3.3 COORDINATION:

A. THE SUBCONTRACTOR SHALL COORDINATE THE INSTALLATION OF ELECTRICAL ITEMS WITH THE OWNER–FURNISHED EQUIPMENT DELIVERY SCHEDULE TO PREVENT UNNECESSARY DELAYS IN THE TOTAL WORK.

3.4 INSTALLATION:

A. CONDUIT:

1. ALL ELECTRICAL WIRING SHALL BE INSTALLED IN CONDUIT AS SPECIFIED. NO CONDUIT OR TUBING OF LESS THAN 3/4 INCH TRADE SIZE.

2. PROVIDE RIGID PVC SCHEDULE 80 CONDUITS FOR ALL RISERS, RMC OTHERWISE NOTED. EMT MAY BE INSTALLED FOR EXTERIOR CONDUITS WHERE NOT SUBJECT TO PHYSICAL DAMAGE.

3. THE INSTALLATION OF SCHEDULE 40 PVC AND RMC CONDUITS SHALL BE 24 INCHES MINIMUM DEPTH. ALL 90 DEGREE BENDS SHALL BE RMC. EXPANSION JOINTS ARE REQUIRED ON ALL CONDUIT RISERS.

4. USE GALVANIZED FLEXIBLE STEEL CONDUIT WHERE DIRECT CONNECTION TO EQUIPMENT WITH MOVEMENT, VIBRATION, OR FOR EASE OF MAINTENANCE. USE LIQUID TIGHT, FLEXIBLE METAL CONDUIT FOR OUTDOOR APPLICATIONS. INSTALL GALVANIZED FLEXIBLE STEEL CONDUIT AT ALL POINTS OF CONNECTION TO EQUIPMENT MOUNTED ON SUPPORT TO ALLOW FOR EXPANSION AND CONTRACTION.

5. A RUN OF CONDUIT BETWEEN BOXES OR EQUIPMENT SHALL NOT CONTAIN MORE THAN THE EQUIVALENT OF THREE QUARTER–BENDS. CONDUIT BEND SHALL BE MADE WITH THE UL LISTED BENDER OR FACTORY 90 DEGREE ELBOWS MAY BE USED.

6. FIELD FABRICATED CONDUITS SHALL BE CUT SQUARE WITH A CONDUIT CUTTING TOOL AND REAMED TO PROVIDE A SMOOTH INSIDE SURFACE.

7. PROVIDE INSULATED GROUNDING BUSHING FOR ALL CONDUITS.

8. SUBCONTRACTOR IS RESPONSIBLE FOR PROTECTING ALL CONDUITS DURING CONSTRUCTION. TEMPORARY OPENINGS IN THE CONDUIT SYSTEM SHALL BE PLUGGED OR CAPPED TO PREVENT ENTRANCE OF MOISTURE OR FOREIGN MATTER. SUBCONTRACTOR SHALL REPLACE ANY CONDUITS CONTAINING FOREIGN MATERIALS THAT CANNOT BE REMOVED.

9. ALL CONDUITS SHALL BE SWABBED CLEAN BY PULLING AN APPROPRIATE SIZE MANDREL THROUGH THE CONDUIT BEFORE INSTALLATION OF CONDUCTORS OR CABLES. CONDUIT SHALL BE FREE OF DIRT AND DEBRIS.

10. INSTALL PULL STRINGS IN ALL CLEAN EMPTY CONDUITS. IDENTIFY PULL STRINGS AT EACH END.

11. INSTALL 2" HIGHLY VISIBLE AND DETECTABLE TAPE 12" ABOVE ALL UNDERGROUND CONDUITS AND CONDUCTORS.

12. CONDUITS SHALL BE INSTALLED IN SUCH A MANNER AS TO INSURE AGAINST COLLECTION OF TRAPPED CONDENSATION.

13. PROVIDE CORE DRILLING AS NECESSARY FOR PENETRATIONS TO ALLOW FOR RACEWAYS AND CABLES TO BE ROUTED THROUGH THE BUILDING. DO NOT PENETRATE STRUCTURAL MEMBERS UNLESS SPECIFICALLY SHOWN ON DSA APPROVED DWG'S. ANY CORING/CUTTING REQUIRED TO COMPLETE THE WORK, BUT NOT SHOWN ON DSA APPROVED DWG'S SHALL BE SUBJECT TO DSA REVIEW AND APPROVAL PRIOR TO BEGINNING ON SUCH WORK. SLEEVES AND/OR PENETRATION SHALL BE EFFECTIVELY SEALED WITH FIRE RATED MATERIAL WHICH SHALL MAINTAIN THE FIRE RATING OF THE WALL OR STRUCTURE. FIRE STOPS AT FLOOR PENETRATIONS SHALL PREVENT PASSAGE OF WATER, SMOKE, FIRE, AND FUMES. ALL MATERIAL SHALL BE UL APPROVED FOR THIS PURPOSE.

B. CONDUCTORS AND CABLE:

1. ALL POWER WIRING SHALL BE COLOR CODED AS FOLLOWS:

DESCRIPTION	208/240/120 VOLT SYSTEMS
PHASE A	BLACK
PHASE B	RED
PHASE C	BLUE
NEUTRAL	WHITE
GROUNDING	GREEN

2. SPLICES SHALL BE MADE ONLY AT OUTLETS, JUNCTION BOXES, OR ACCESSIBLE RACEWAY CONDULETS APPROVED FOR THIS PURPOSE.

3. PULLING LUBRICANTS SHALL BE UL APPROVED. SUBCONTRACTOR SHALL USE NYLON OR HEMP ROPE FOR PULLING CONDUCTOR OR CABLES INTO THE CONDUIT.

4. CABLES SHALL BE NEATLY TRAINED, WITHOUT INTERLACING, AND BE OF SUFFICIENT LENGTH IN ALL BOXES & EQUIPMENT TO PERMIT MAKING A NEAT ARRANGEMENT. CABLES SHALL BE SECURED IN A MANNER TO AVOID TENSION ON CONDUCTORS OR TERMINALS. CONDUCTORS SHALL BE PROTECTED FROM MECHANICAL INJURY AND MOISTURE. SHARP BENDS OVER CONDUIT BUSHINGS IS PROHIBITED. DAMAGED CABLES SHALL BE REMOVED AND REPLACED AT THE SUBCONTRACTOR'S EXPENSE.

C. DISCONNECT SWITCHES:

1. INSTALL DISCONNECT SWITCHES LEVEL AND PLUMB. CONNECT TO WIRING SYSTEM AND GROUNDING SYSTEM AS INDICATED.

D. GROUNDING:

1. ALL METALLIC PARTS OF ELECTRICAL EQUIPMENT WHICH DO NOT CARRY CURRENT SHALL BE GROUNDED IN ACCORDANCE WITH THE REQUIREMENTS OF THE BUILDING MANUFACTURER, AT&T GROUNDING AND BONDING STANDARDS TP–76416, ND–00135, AND THE CALIFORNIA ELECTRICAL CODE (2013 CEC EDITION).

2. PROVIDE ELECTRICAL GROUNDING AND BONDING SYSTEM INDICATED WITH ASSEMBLY OF MATERIALS, INCLUDING GROUNDING ELECTRODES, BONDING JUMPERS AND ADDITIONAL ACCESSORIES AS REQUIRED FOR A COMPLETE INSTALLATION.

3. ALL GROUNDING CONDUCTORS SHALL PROVIDE A STRAIGHT DOWNWARD PATH TO GROUND WITH GRADUAL BEND AS REQUIRED. GROUNDING CONDUCTORS SHALL NOT BE LOOPED OR SHARPLY BENT. ROUTE GROUNDING CONNECTIONS AND CONDUCTORS TO GROUND IN THE SHORTEST AND STRAIGHTEST PATHS POSSIBLE TO MINIMIZE TRANSIENT VOLTAGE RISES.

4. BUILDINGS AND/OR NEW TOWERS GREATER THAN 75 FEET IN HEIGHT AND WHERE THE MAIN GROUNDING CONDUCTORS ARE REQUIRED TO BE ROUTED TO GRADE, THE SUBCONTRACTOR SHALL ROUTE TWO GROUNDING CONDUCTORS FROM THE ROOFTOP, TOWERS, AND WATER TOWERS GROUNDING RING, TO THE EXISTING GROUNDING SYSTEM, THE GROUNDING CONDUCTORS SHALL NOT BE SMALLER THAN 2/0 AWG COPPER. ROOFTOP GROUNDING RING SHALL BE BONDED TO THE EXISTING GROUNDING SYSTEM, THE BUILDING STEEL COLUMNS, LIGHTNING PROTECTION SYSTEM, AND BUILDING MAIN WATER LINE (FERROUS OR NONFERROUS METAL PIPING ONLY). SEE STANDARD 6.3.2.2.

5. TIGHTEN GROUNDING AND BONDING CONNECTORS, INCLUDING SCREWS AND BOLTS, IN ACCORDANCE WITH MANUFACTURER'S PUBLISHED TORQUE TIGHTENING VALUES FOR CONNECTORS AND BOLTS. WHERE MANUFACTURER'S TORQUING REQUIREMENTS ARE NOT AVAILABLE, TIGHTEN CONNECTIONS TO COMPLY WITH TIGHTENING TORQUE VALUES SPECIFIED IN UL TO ASSURE PERMANENT AND EFFECTIVE GROUNDING.

6. SUBCONTRACTOR SHALL VERIFY THE LOCATIONS OF GROUNDING TIE–IN–POINTS TO THE EXISTING GROUNDING SYSTEM. ALL UNDERGROUND GROUNDING CONNECTIONS SHALL BE MADE BY THE EXOTHERMIC WELD PROCESS AND INSTALLED IN ACCORDANCE WITH THE MANUFACTURER'S INSTRUCTIONS.

7. ALL GROUNDING CONNECTIONS SHALL BE INSPECTED FOR TIGHTNESS. EXOTHERMIC WELDED CONNECTIONS SHALL BE APPROVED BY THE INSPECTOR HAVING JURISDICTION BEFORE BEING PERMANENTLY CONCEALED.

8. APPLY CORROSION–RESISTANCE FINISH TO FIELD CONNECTIONS AND PLACES WHERE FACTORY APPLIED PROTECTIVE COATINGS HAVE BEEN DESTROYED. USE KOPR–SHIELD ANTI–OXIDATION COMPOUND ON ALL COMPRESSION GROUNDING CONNECTIONS.

9. A SEPARATE, CONTINUOUS, INSULATED EQUIPMENT GROUNDING CONDUCTOR SHALL BE INSTALLED IN ALL FEEDER AND BRANCH CIRCUITS.

10. BOND ALL INSULATED GROUNDING BUSHINGS WITH A BARE 6 AWG GROUNDING CONDUCTOR TO A GROUND BUS.

11. DIRECT BURIED GROUNDING CONDUCTORS SHALL BE INSTALLED AT A NOMINAL DEPTH OF 36" MINIMUM BELOW GRADE, OR 6" BELOW THE FROST LINE, USE THE GREATER OF THE TWO DISTANCES.

12. ALL GROUNDING CONDUCTORS EMBEDDED IN OR PENETRATING CONCRETE SHALL BE INSTALLED IN SCHEDULE 40 PVC CONDUIT.

13. THE INSTALLATION OF CHEMICAL ELECTROLYTIC GROUNDING SYSTEM IN STRICT ACCORDANCE WITH MANUFACTURER'S INSTRUCTIONS. REMOVE SEALING TAPE FROM LEACHING AND BREATHER HOLES. INSTALL PROTECTIVE BOX FLUSH WITH GRADE.

14. DRIVE GROUND RODS UNTIL TOPS ARE A MINIMUM DISTANCE OF 36" DEPTH OR 6" BELOW FROST LINE, USING THE GREATER OF THE TWO DISTANCES.

15. IF COAX ON THE ICE BRIDGE IS MORE THAN 6 FT. FROM THE GROUNDING BAR AT THE BASE OF THE TOWER, A SECOND GROUNDING BAR WILL BE NEEDED AT THE END OF THE ICE BRIDGE, TO GROUND THE COAX CABLE GROUNDING KITS AND IN–LINE ARRESTORS

16. SUBCONTRACTOR SHALL REPAIR, AND/OR REPLACE, EXISTING GROUNDING SYSTEM COMPONENTS DAMAGED DURING CONSTRUCTION AT THE SUBCONTRACTORS EXPENSE.

3.5 ACCEPTANCE TESTING:

A. CERTIFIED PERSONNEL USING CERTIFIED EQUIPMENT SHALL PERFORM REQUIRED TESTS AND SUBMIT WRITTEN TEST REPORTS UPON COMPLETION.

B. WHEN MATERIAL AND/OR WORKMANSHIP IS FOUND NOT TO COMPLY WITH THE SPECIFIED REQUIREMENTS, THE NON–COMPLYING ITEMS SHALL BE REMOVED FROM THE PROJECT SITE AND REPLACED WITH ITEMS COMPLYING WITH THE SPECIFIED REQUIREMENTS PROMPTLY AFTER RECEIPT OF NOTICE FOR NON–COMPLIANCE.

C. TEST PROCEDURES;

1. ALL FEEDERS SHALL HAVE INSULATION TESTED AFTER INSTALLATION, BEFORE CONNECTION TO DEVICES. THE CONDUCTORS SHALL TEST FREE FROM SHORT CIRCUITS AND GROUNDS. TESTING SHALL BE FOR ONE MINUTE USING 1000V DC. PROVIDE WRITTEN DOCUMENTATION FOR ALL TEST RESULTS.

2. PRIOR TO ENERGIZING CIRCUITRY, TEST WIRING DEVICES FOR ELECTRICAL CONTINUITY AND PROPER POLARITY CONNECTIONS.

3. MEASURE AND RECORD VOLTAGES BETWEEN PHASES AND BETWEEN PHASE CONDUCTORS AND NEUTRALS. SUBMIT A REPORT OF MAXIMUM AND MINIMUM VOLTAGES

4. PERFORM GROUNDING TEST TO MEASURE GROUNDING RESISTANCE OF GROUNDING SYSTEM USING THE IEEE STANDARD 3–POINT "FALL–OF–POTENTIAL" METHOD. PROVIDE PLOTTED TEST VALUES AND LOCATION SKETCH. NOTIFY THE ENGINEER IMMEDIATELY IF MEASURED VALUE IS OVER 5 OHMS.

GENERAL ELECTRICAL NOTES

at&t

AT&T MOBILITY
10550 W. CHARLESTON
SUITE B
LAS VEGAS, NV 89135

BLACK & VEATCH

BLACK & VEATCH CORPORATION
8965 S EASTERN AVE
SUITE #325
LAS VEGAS, NV 89123

PROJECT NO:	129084.1521
DRAWN BY:	VIG
CHECKED BY:	GAC

REV	DATE	DESCRIPTION
0	06/11/19	ISSUED FOR CONSTRUCTION

PROFESSIONAL ENGINEER – STATE OF NEVADA
HYUN KIM
Exp. 06-30-21
STRUCTURAL
06/11/19
No. 026566

IT IS A VIOLATION OF LAW FOR ANY PERSON, UNLESS THEY ARE ACTING UNDER THE DIRECTION OF A LICENSED PROFESSIONAL ENGINEER, TO ALTER THIS DOCUMENT.

NVL08340F_R03
INTERSECTION OF
1921 TROPICAL BREEZE DR
LAS VEGAS, NV 89117
PICO SMALL CELL

SHEET TITLE

GENERAL NOTES

SHEET NUMBER

GN-2

STRUCTURAL STEEL NOTES

1. DESIGN, FABRICATION, ERECTION, ALTERATION AND MAINTENANCE SHALL CONFORM TO THE FOLLOWING, UNLESS NOTED OTHERWISE (UNO).
   A. TIA-222: STRUCTURAL STANDARD FOR ANTENNA SUPPORTING STRUCTURES AND ANTENNAS
   B. TIA-1019-A: INSTALLATION, ALTERATION, AND MAINTENANCE OF ANTENNA SUPPORTING STRUCTURES AND ANTENNAS
   C. AISC: MANUAL OF STEEL CONSTRUCTION
2. ALL STRUCTURAL ELEMENTS SHALL CONFORM TO THE FOLLOWING REQUIREMENTS, UNO.
   A. STRUCTURAL STEEL, ASTM A572 GRADE 65 (FY = 65 KSI).
   B. ALL BOLTS, ASTM A325 TYPE 1 GALVANIZED HIGH STRENGTH BOLTS.
   C. ALL NUTS, ASTM A563 CARBON AND ALLOY STEEL NUTS.
   D. ALL WASHERS, ASTM F436 HARDENED STEEL WASHERS.
3. ALL HOLES SHALL BE CUT WITH A GRINDER OR DRILLED. HOLES SHALL NOT BE FLAME CUT THRU STEEL UNLESS APPROVED BY THE ENGINEER OF RECORD.
4. ALL FASTENERS SHALL NOT BE REUSED.
5. A NUT LOCKING DEVICE SHALL BE INSTALLED ON ALL PROPOSED AND/OR REPLACED ASTM A325 BOLTS.
6. ALL PROPOSED AND/OR REPLACED BOLTS SHALL BE OF SUFFICIENT LENGTH SUCH THAT THE END OF THE BOLT BE AT LEAST FLUSH WITH THE FACE OF THE NUT. IT IS NOT PERMITTED FOR THE BOLT END TO BE BELOW THE FACE OF THE NUT AFTER TIGHTENING IS COMPLETED.
7. HOT-DIP GALVANIZE ALL ITEMS, UNO.
   GALVANIZE PER ASTM A123, ASTM A153/A153M OR ASTM A653 G90, AS APPLICABLE.
8. AFTER FINAL INSPECTION, ALL EXPOSED STRUCTURAL STEEL AS THE RESULT OF THIS SCOPE OF WORK INCLUDING WELDS, FIELD DRILLED HOLES, AND SHAFT INTERIORS (WHERE ACCESSIBLE), SHALL BE CLEANED AND COLD GALVANIZING APPLIED BY BRUSH. PHOTO DOCUMENTATION IS REQUIRED TO BE SUBMITTED TO THE INSPECTOR.

WELDING NOTES

1. ALL WELDING SHALL BE IN ACCORDANCE WITH THE AWS D1.1/D1.1M, "STRUCTURAL WELDING CODE-STEEL".
2. ALL WELDING SHALL BE PERFORMED BY AWS CERTIFIED WELDERS.
3. ALL ARC WELDING ON STRUCTURES SHALL BE DONE IN ACCORDANCE WITH AWS D1.1 (LATEST EDITION). THIS SHALL INCLUDE A CERTIFIED WELDING INSPECTOR (CWI) FOR ACCEPTANCE OR REJECTION OF ALL WELDING OPERATIONS, PRE-DURING-POST, USING THE ACCEPTANCE CRITERIA OF AWS D1.1. THE CWI SHALL WORK WITH THE GC ON THE LEVEL OF INTERACTION NEEDED TO CONDUCT THE WELDING INSPECTION. THE CERTIFIED WELDING INSPECTION IS THE RESPONSIBILITY OF THE GC.
4. FOR ALL WELDING, USE E80XX ELECTRODES FOR SMAW PROCESS AND E8XT-XX ELECTRODES FOR FCAW PROCESS, UNO.
5. SURFACES TO BE WELDED SHALL BE FREE FROM SCALE, SLAG, RUST, MOISTURE, GREASE OR ANY OTHER FOREIGN MATERIAL THAT WOULD PREVENT PROPER WELDING. GRIND THE SURFACE ADJACENT TO THE WELD FOR A DISTANCE OF 2" MINIMUM ALL AROUND. ENSURE BOTH AREAS ARE 100% FREE OF ALL GALVANIZING.
6. REPAIR THE GALVANIZED COATING. ALL AREAS AFFECTED BY THE FIELD DRILLING, FIELD GRINDING AND FIELD WELDING, BOTH INSIDE AND OUTSIDE THE MONOPOLE, SHALL BE REPAIRED. PRODUCTS TO BE APPLIED IN STRICT ACCORDANCE WITH MANUFACTURER'S RECOMMENDATIONS. AREAS THAT HAVE BEEN TOUCHED UP SHOULD BE INSPECTED AS PART OF THE ROUTINE MAINTENANCE OF THE STRUCTURE. NO SPRAY PAINT IS ALLOWED. AFTER ZINC-RICH PAINT IS DRY, OVERCOAT WITH OWNER'S PAINT SPECIFICATIONS, APPLIED IN STRICT ACCORDANCE WITH THE MANUFACTURER'S RECOMMENDATIONS.
7. DO NOT WELD IF THE TEMPERATURE OF THE STEEL IN THE VICINITY OF THE WELD AREA IS BELOW 0° F. WHEN THE TEMPERATURE IS BETWEEN 0° F AND 32° F, PREHEAT AND MAINTAIN THE STEEL IN THE VICINITY OF THE WELD AREA AT 70° F DURING THE WELDING PROCESS.
8. DO NOT WELD ON WET OR FROST-COVERED SURFACES & PROVIDE ADEQUATE PROTECTION FROM HIGH WINDS.
9. MOVE ALL COAX AND OTHER FLAMMABLE MATERIALS FROM ANY AREA THAT MAY BE HEATED DURING CONSTRUCTION.
10. CONTRACTOR SHALL MAKE PROPER PRECAUTIONS AND PROCEDURES TO PROTECT THE STRUCTURE FROM CATCHING FIRE DURING ALL WELDING OPERATIONS. THE FOLLOWING FIRE SAFETY PREVENTION PROTOCOL IS THE MINIMUM REQUIREMENTS DURING WELDING OPERATIONS.
    - 500 GALLON WATER TANK WITH PUMP TO BE ON SITE AT ALL TIMES.
    - 2 FIRE EXTINGUISHERS ON SITE AT ALL TIMES.
    - 2 MAN FIRE WATCH ON ANY ADJACENT STRUCTURES, FIELDS AND POLE.
    - INTERMITTENT COOLING OF WELDED SURFACE TO REDUCE HEAT IN STRUCTURE.

STORMWATER BMP NOTES:

1. THE OWNER, SITE DEVELOPER, CONTRACTOR, AND/OR THEIR AUTHORIZED AGENTS SHALL EACH DAY REMOVE ALL SEDIMENT, MUD, CONSTRUCTION DEBRIS, OR OTHER POTENTIAL POLLUTANTS THAT MAY HAVE BEEN DISCHARGED TO, OR ACCUMULATED IN, THE PUBLIC RIGHTS OF WAY OF CLARK COUNTY AS A RESULT OF CONSTRUCTION ACTIVITIES ASSOCIATED WITH THIS SITE DEVELOPMENT OR CONSTRUCTION PROJECT. SUCH MATERIALS SHALL BE PREVENTED FROM ENTERING THE STORM SEWER SYSTEM.
2. ADDITIONAL CONSTRUCTION SITE DISCHARGE BEST MANAGEMENT PRACTICES MAY BE REQUIRED OF THE OWNER AND HIS OR HER AGENTS DUE TO UNFORESEEN EROSION PROBLEMS OR IF THE SUBMITTED PLAN DOES NOT MEET THE PERFORMANCE STANDARDS SPECIFIED IN THE LAS VEGAS VALLEY CONSTRUCTION SITE BMP GUIDANCE MANUAL.
3. AT A MINIMUM, THE CONTRACTOR OR HIS AGENT SHALL INSPECT ALL DISTURBED AREAS, AREAS USED FOR STORAGE OF MATERIALS AND EQUIPMENT THAT ARE EXPOSED TO PRECIPITATION, VEHICLE ENTRANCE AND EXIT LOCATIONS, AND ALL BMPS WEEKLY, AND WITHIN 24 HOURS AFTER ANY RAIN EVENT OF 0.5 INCHES OR MORE. THE CONTRACTOR OR HIS AGENT SHALL UPDATE OR MODIFY THE STORMWATER POLLUTION PREVENTION PLAN AS NECESSARY. SOME EXCEPTIONS TO WEEKLY INSPECTIONS MAY APPLY, SUCH AS SUSPENSION OF LAND DISTURBANCE ACTIVITIES. REFER TO THE NEVADA STORMWATER GENERAL PERMIT FOR CONSTRUCTION ACTIVITY NVR100000, SECTION III.A.12.
4. ACCUMULATED SEDIMENT IN BMPS SHALL BE REMOVED WITHIN SEVEN DAYS AFTER A STORMWATER RUNOFF EVENT OR PRIOR TO THE NEXT ANTICIPATED STORM EVENT, WHICHEVER IS EARLIER. SEDIMENT MUST BE REMOVED WHEN BMP DESIGN CAPACITY HAS BEEN REDUCED BY 50 PERCENT OR MORE.
5. BMP'S TO BE IMPLEMENTED INCLUDE BUT ARE NOT LIMITED TO:
   A. MINIMIZE DISTURBED AREA AND PROTECT NATURAL FEATURES AND SOIL
   B. CONTROLLING STORMWATER FLOWING ONTO AND THROUGH THE PROJECT VIA THE USE OF SEDIMENT BERMS AND STRAW WADDLES AS APPROPRIATE
   C. STABILIZING SOILS THROUGH SITE RESTORATION AT COMPLETION OF PROJECT
   D. PROTECTING STORM DRAIN INLETS VIA THE USE OF SAND BAGS, STRAW WADDLES AND FILTER FABRIC AS APPROPRIATE
6. BMP'S MUST BE IN PLACE WHEN SOILS ARE EXPOSED (NO WAITING PERIODS)

at&t

AT&T MOBILITY
10550 W. CHARLESTON
SUITE B
LAS VEGAS, NV 89135

BLACK & VEATCH

BLACK & VEATCH CORPORATION
8965 S EASTERN AVE
SUITE #325
LAS VEGAS, NV 89123

PROJECT NO:	129084.1521
DRAWN BY:	VIG
CHECKED BY:	GAC

REV	DATE	DESCRIPTION
0	06/11/19	ISSUED FOR CONSTRUCTION

PROFESSIONAL ENGINEER - STATE OF NEVADA
HYUN KIM
Exp. 06-30-21
STRUCTURAL
06/11/19
No. 026586

IT IS A VIOLATION OF LAW FOR ANY PERSON, UNLESS THEY ARE ACTING UNDER THE DIRECTION OF A LICENSED PROFESSIONAL ENGINEER, TO ALTER THIS DOCUMENT.

NVL08340F_R03
INTERSECTION OF
1921 TROPICAL BREEZE DR
LAS VEGAS, NV 89117
PICO SMALL CELL

SHEET TITLE

GENERAL NOTES

SHEET NUMBER

GN-3

SMALL CELL SITE SURVEY
SITE: CRAN_NVL08340F_R03
NW¼SE¼ OF SECTION 6, TOWNSHIP 21 SOUTH, RANGE 60 EAST

SITE #/PACE_NAME:	CRAN_NVL08340F_R03_LTE_1C_1900
FA LOCATION CODE:	14935554
PACE #:	MRSDL028149

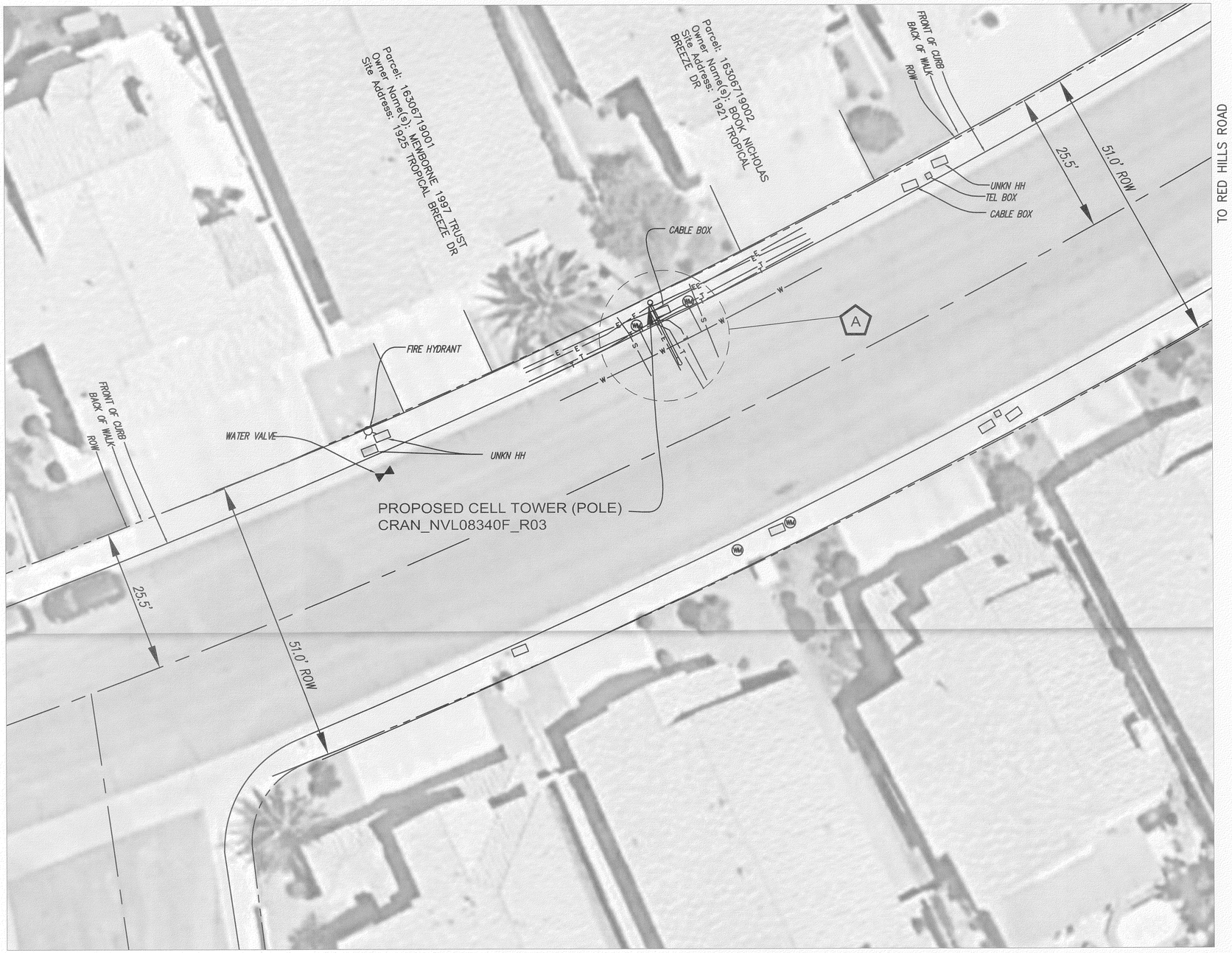

N

GRAPHIC SCALE

20 0 10 20

FEET

A *LATITUDE:* 36°08'56.24"N
LONGITUDE: 115°18'21.68"W
GROUND ELEVATION: 2853.30'
NAVD '88

Legend	
	MONUMENT
	POLE
	DOWN GUY
	GAS VALVE
	PEDASTAL
	LAMP POST
	WATER VALVE
	FIRE HYDRANT
	WATER MANHOLE
	WATER METER
	SEWER MANHOLE
	UNKNOWN OR LABELED MANHOLE
	SANITARY SEWER MANHOLE
	STORM WATER MANHOLE
	ELECTRIC MANHOLE
	TELECOM MANHOLE
	TREE
FENCELINE	
ROW LINE	
CENTER LINE	
SEWER	S
TELEPHONE	T
WATER	W
ELECTRIC	E
GAS LINE	G
OVERHEAD ELEC	
FENCE BARB	X
PROPERTY LINE	

at&t
12900 PARK PLAZA DRIVE,
CERRITOS, CA 90703

ENGINEERS:
BLACK & VEATCH
6 SUNSET WAY
SUITE B108
HENDERSON, NV 89014

SITE NO:	CRAN_NVL08340F_R03
DRAWN BY:	KJC
CHECKED BY:	CIS

REV	DATE	DESCRIPTION
A	5/14/19	PRELIMINARY SUBMITTAL

SURVEYOR:
CIS
PROFESSIONAL LAND SURVEYING
435-660-0816

CIS JOB NO:
CIS 315-1-31-162

SHEET TITLE
SMALL CELL SITE SURVEY

SHEET NUMBER
1 OF 1

SMALL CELL SITE SURVEY

Department of Public Works - TEFO

- *THIS FORM IDENTIFIES THE POTENTIAL POWER SUPPLY SOURCE FOR A PROPOSED SMALL CELL SITE.*
- *THIS ONLY REPRESENTS THE CONDITIONS AT TIME OF SITE SURVEY.*
- *FIELD CONDITIONS MAY CHANGE FROM THE TIME OF THE SITE SURVEY UNTIL THE START OF CONSTRUCTION.*
- *A REQUEST FOR A SMALL CELL SITE SURVEY BY A CONTRACTOR OR WIRELESS SERVICE PROVIDER DOES NOT CONSTITUTE A REQUEST FOR AUTHORIZATION TO PLACE, CONSTRUCT OR MODIFY PERSONAL WIRELESS SERVICE FACILITIES FOR PURPOSES OF ANY FEDERAL, STATE OR LOCAL RULE, LAW OR ORDER. THE ACTIONS BY THE CITY AND THE CONTRACTOR IN SURVEYING THE SITE INDICATED BELOW IS NECESSARY TO PROVIDE THE INFORMATION NECESSARY TO A WIRELESS SERVICE PROVIDER TO PREPARE ITS APPLICATION(S) FOR AUTHORIZATION TO PLACE, CONSTRUCT OR MODIFY PERSONAL WIRELESS SERVICE FACILITIES.*

Contractor's Name: Black & Veatch Wireless Use Agreement: New Cingular Wireless

Wireless Service Provider/ID#: New Cingular Wireless ID # NVL08340_R03_L356 #10067055 Contact Name: Rich Conte

Office Phone/Fax: 8965 South Eastern Avenue, Suite 325 LV. NV 89123 / 702-434-3378 Cell: 702-894-4556

Pole Location & ID: 36.1489650 -115.3060440-1921 Tropical Breeze Dr.#29860

Pole Type: ○ New Pole ◉ Existing Pole

Notes:
South Side of street.
#29860
Eleven spare openings.
Suitable for use to serve small cell site without upgrade.

EXISTING SERVICE INFORMATION

Service Location: 1832 Summit Pointe

Existing Meter #: CC030093010 Premise #:

Existing Service Size: ○ 60 Amp ○ 100 Amp ◉ 125 Amp ○ 200 Amp

Street Light Circuit:

Service Type: ◉ Pedestal ○ Pole Mount ○ Wall Mount

Current Application: ○ Traffic Signal ◉ Street Lighting ○ Both

Existing Load (Amps): Traffic Signal: Street Lighting: 68.1 Combined:

Field Tested By: T. Azbill **Date:** 05/03/2019

CLV REPRESENTATIVE

FOR INTERNAL USE ONLY

CLV Field Reviewer's Name: M. Algieri & A. Clyburn Field Review Date: 5/1/19

Senior/Supervisor Review Signature: Date Reviewed: 5/6/19

POWER SERVICE DOCUMENTATION

LOAD BAY DOCUMENTATION FOR SPACE UTILIZATION

(NOTE RESPECTIVE AMPACITY AND BREAKER SIZE FOR ALL SLOTS PRESENTLY IN USE)

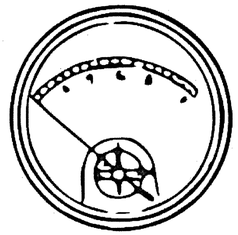

SPARE	125 "DBL"
SPARE	"DBL"
SPARE	60 "DBL" (33.9a)
SPARE	"DBL" (33.6a)
15 (0.6a)	SPARE
SPARE	SPARE
SPARE	SPARE
SPARE	SPARE