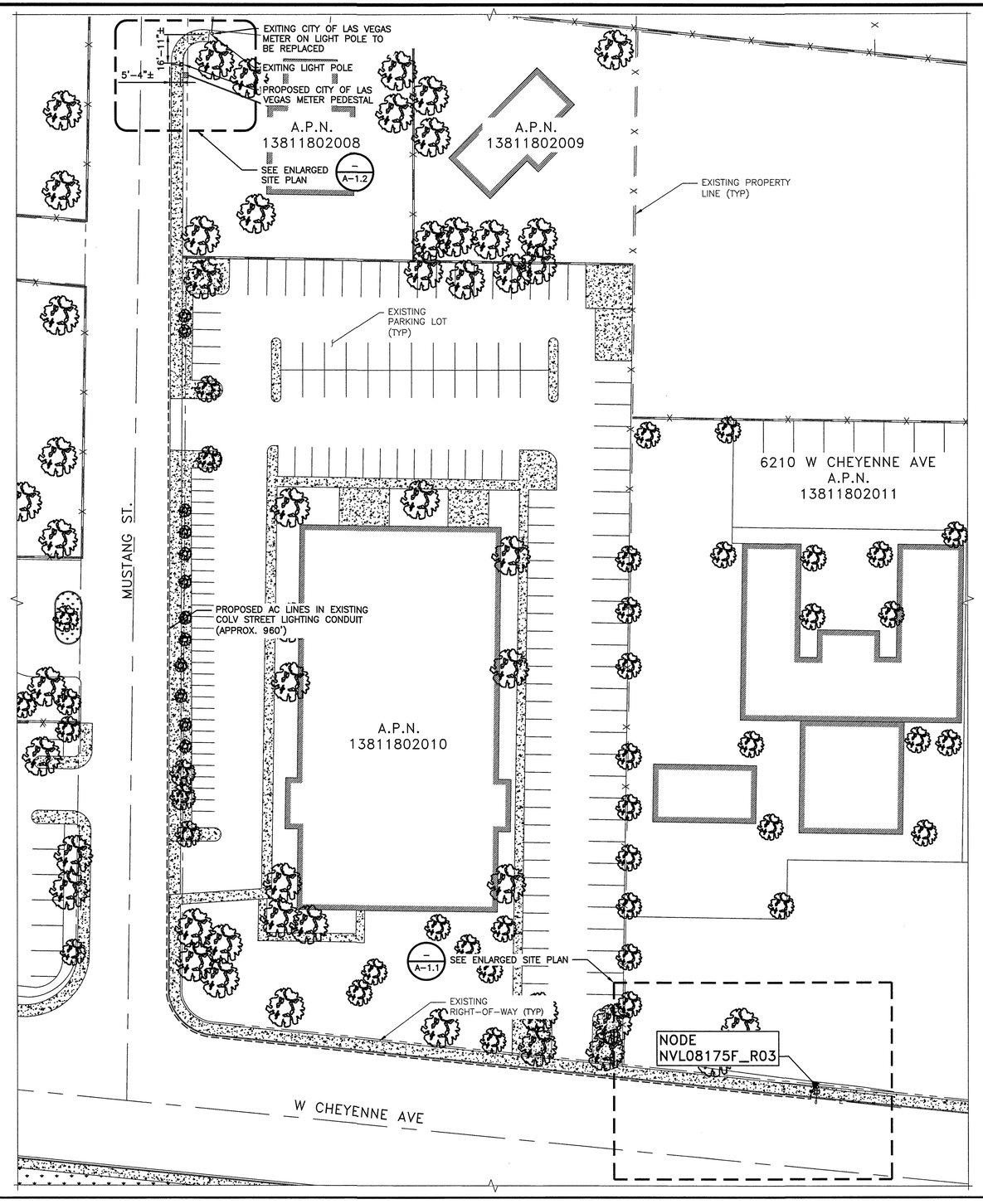

THIS DRAWING IS NOT A SITE SURVEY

THE PURPOSE OF THIS DRAWING IS TO SHOW HOW THE DEVELOPED SITE RELATES TO THE PARENT PARCEL AND ADJACENT PROPERTIES. R.O.W. MEASUREMENTS ARE APPROXIMATIONS.

EXPANDED SITE PLAN AND UTILITY ROUTE

NO SCALE

A


at&t

AT&T MOBILITY
10550 W. CHARLESTON
SUITE B
LAS VEGAS, NV 89135

BLACK & VEATCH

BLACK & VEATCH CORPORATION
8965 S EASTERN AVE
SUITE #325
LAS VEGAS, NV 89123


| | |
|---|---|
| PROJECT NO: | 129084.1501 |
| DRAWN BY: | TPG |
| CHECKED BY: | GAC |

| REV | DATE | DESCRIPTION |
|---|---|---|
| 2 | 07/22/19 | CITY COMMENTS |
| 1 | 05/23/19 | ISSUED FOR CONSTRUCTION |
| 0 | 04/01/19 | ISSUED FOR CONSTRUCTION |

REGISTERED PROFESSIONAL ENGINEER
ERIC S. BRANDSTADTER
Exp. 12/31/20
CIVIL
STATE OF NEVADA
9/25/19

IT IS A VIOLATION OF LAW FOR ANY PERSON, UNLESS THEY ARE ACTING UNDER THE DIRECTION OF A LICENSED PROFESSIONAL ENGINEER, TO ALTER THIS DOCUMENT.

NVL08175F_R03
INTERSECTION OF
CHEYENNE AND MAVERICK
LAS VEGAS, NV 89108
PICO SMALL CELL

SHEET TITLE

EXPANDED SITE PLAN AND UTILITY ROUTE

SHEET NUMBER

A-1 2

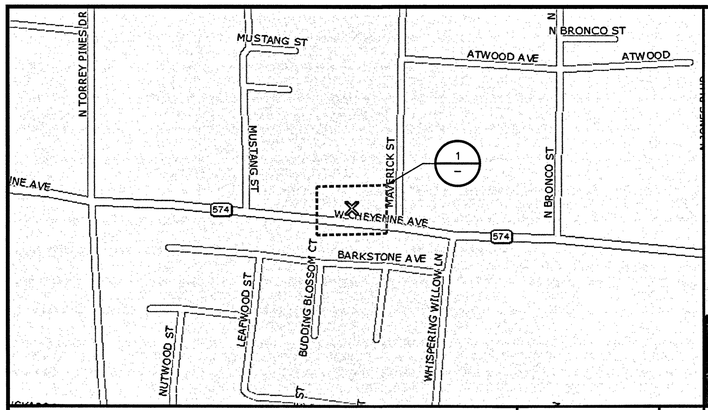


SITE PLAN MAP | NO SCALE | A

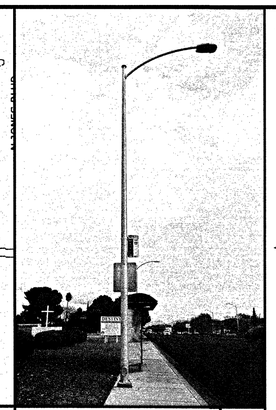

SITE PHOTO | B

THIS DRAWING IS NOT A SITE SURVEY

THE PURPOSE OF THIS DRAWING IS TO SHOW HOW THE DEVELOPED SITE RELATES TO THE PARENT PARCEL AND ADJACENT PROPERTIES. R.O.W. MEASUREMENTS ARE APPROXIMATIONS.

6210 W CHEYENNE AVE
A.P.N.
13811802011

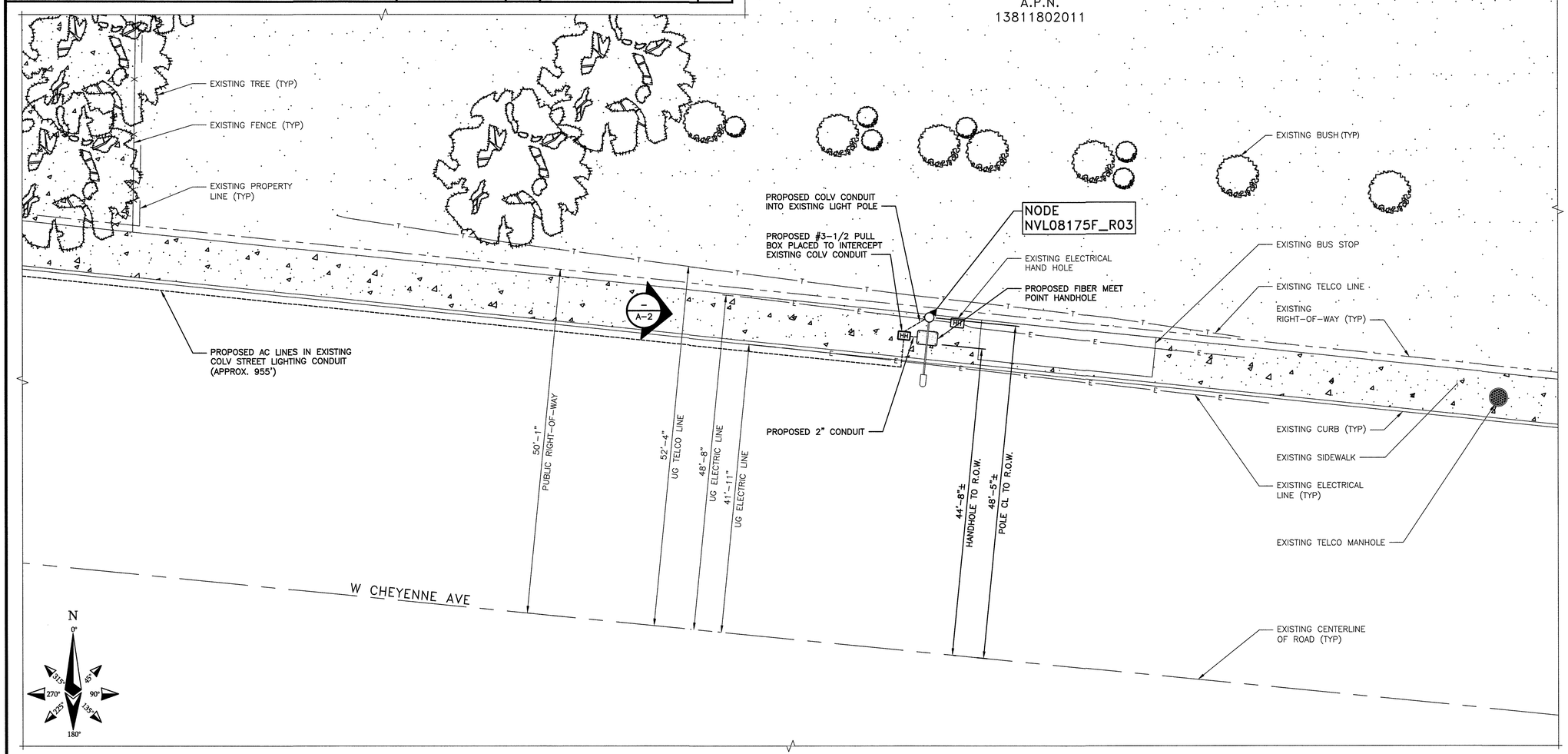


ENLARGED SITE PLAN

8' 4' 0 8' 16'
1/8"=1'-0"

A

at&t

AT&T MOBILITY
10550 W. CHARLESTON
SUITE B
LAS VEGAS, NV 89135

BLACK & VEATCH

BLACK & VEATCH CORPORATION
8965 S EASTERN AVE
SUITE #325
LAS VEGAS, NV 89123

| | |
|---|---|
| PROJECT NO: | 129084.1501 |
| DRAWN BY: | TPG |
| CHECKED BY: | GAC |

| REV | DATE | DESCRIPTION |
|---|---|---|
| 1 | 05/23/19 | ISSUED FOR CONSTRUCTION |
| 0 | 04/01/19 | ISSUED FOR CONSTRUCTION |

PROFESSIONAL ENGINEER - STATE OF NEVADA
ERIC S. BRANDSTADTER
Exp. 12/31/20
CIVIL
No. 015240

5/25/19

IT IS A VIOLATION OF LAW FOR ANY PERSON, UNLESS THEY ARE ACTING UNDER THE DIRECTION OF A LICENSED PROFESSIONAL ENGINEER, TO ALTER THIS DOCUMENT.

NVL08175F_R03
INTERSECTION OF
CHEYENNE AND MAVERICK
LAS VEGAS, NV 89108
PICO SMALL CELL

SHEET TITLE

ENLARGED SITE PLAN

SHEET NUMBER

A-1.1 3

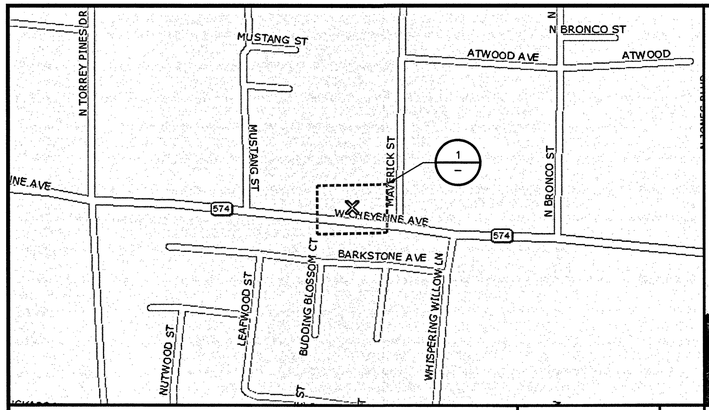


SITE PLAN MAP | NO SCALE | A

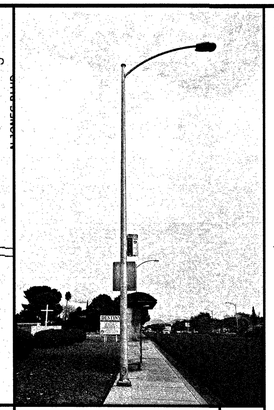

SITE PHOTO | B

THIS DRAWING IS NOT A SITE SURVEY

THE PURPOSE OF THIS DRAWING IS TO SHOW HOW THE DEVELOPED SITE RELATES TO THE PARENT PARCEL AND ADJACENT PROPERTIES. R.O.W. MEASUREMENTS ARE APPROXIMATIONS.

MUSTANG ST.

EXISTING CENTERLINE OF ROAD (TYP)

EXISTING CHAIN-LINK FENCE (TYP)

EXISTING PROPERTY LINE (TYP)

EXISTING RIGHT-OF-WAY (TYP)

EXITING CITY OF LAS VEGAS METER ON LIGHT POLE TO BE REPLACED

EXITING LIGHT POLE

EXISTING TREE (TYP)

23'-2"

16'-11"±

A-5 PROPOSED CITY OF LAS VEGAS METER PEDESTAL

5'-4"±

PROPOSED AC LINES IN EXISTING COLV STREET LIGHTING CONDUIT (APPROX. 960')

EXISTING CURB (TYP)

EXISTING SIDEWALK

EXISTING BLOCK WALL (TYP)

EXISTING BUILDING (TYP)

A.P.N. 13811802008

N 0° 45° 90° 135° 180° 225° 270° 315°

ENLARGED SITE PLAN

8' 4' 0 8' 16'
1/8"=1'-0"

A


at&t

AT&T MOBILITY
10550 W. CHARLESTON
SUITE B
LAS VEGAS, NV 89135

BLACK & VEATCH

BLACK & VEATCH CORPORATION
8965 S EASTERN AVE
SUITE #325
LAS VEGAS, NV 89123


| | |
|---|---|
| PROJECT NO: | 129084.1501 |
| DRAWN BY: | TPG |
| CHECKED BY: | GAC |

| REV | DATE | DESCRIPTION |
|---|---|---|
| 1 | 05/23/19 | ISSUED FOR CONSTRUCTION |
| 0 | 04/01/19 | ISSUED FOR CONSTRUCTION |

PROFESSIONAL ENGINEER - STATE OF NEVADA
ERIC S. BRANDSTADTER
Exp. 12/31/20
CIVIL
No. 015946
7/25/19


IT IS A VIOLATION OF LAW FOR ANY PERSON, UNLESS THEY ARE ACTING UNDER THE DIRECTION OF A LICENSED PROFESSIONAL ENGINEER, TO ALTER THIS DOCUMENT.


NVL08175F_R03
INTERSECTION OF
CHEYENNE AND MAVERICK
LAS VEGAS, NV 89108
PICO SMALL CELL

SHEET TITLE

ENLARGED SITE PLAN

SHEET NUMBER

A-1.2 4

**NOTE**

THESE DRAWINGS HAVE BEEN CREATED BASED ON STRUCTURAL CALCULATIONS PERFORMED BY BLACK & VEATCH CONFIRMING THAT THE STRUCTURE HAS SUFFICIENT CAPACITY TO SUPPORT THE PROPOSED LOADING.

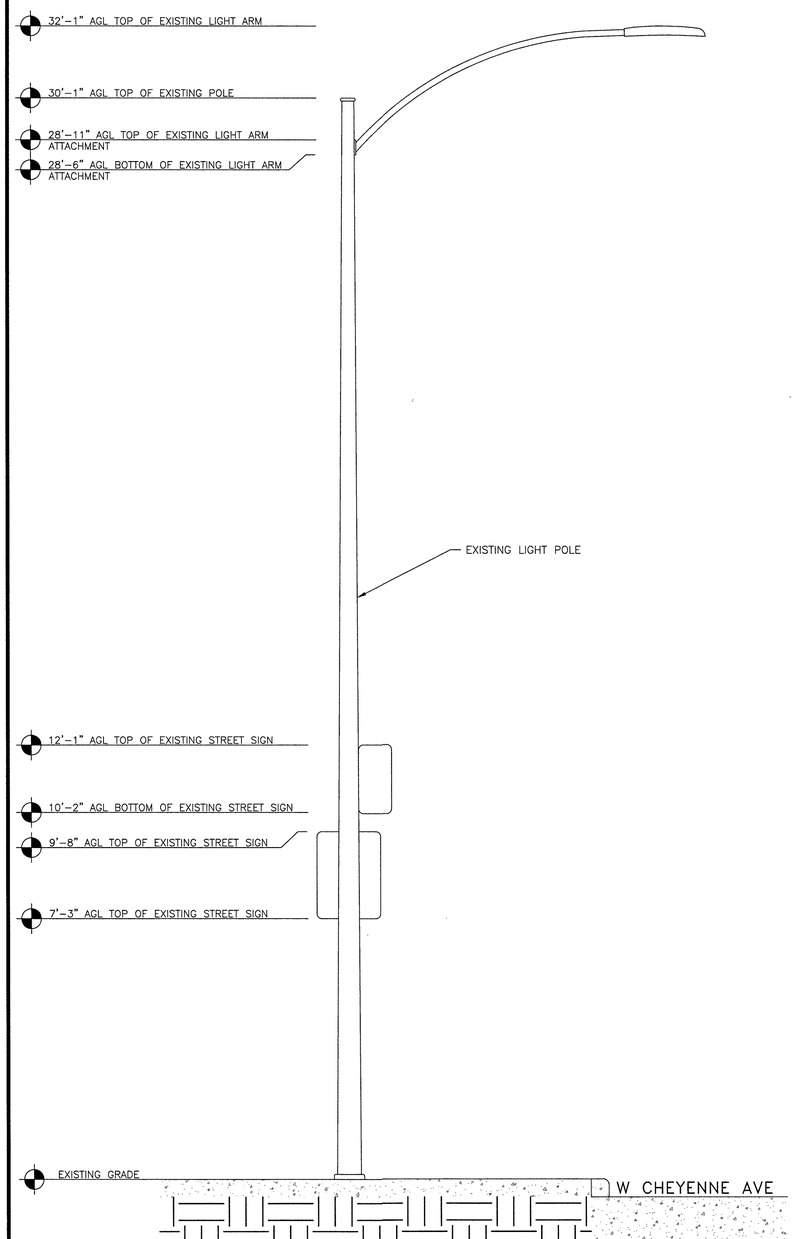


EXISTING WEST ELEVATION | 12" 6" 0 1' 2' 3' 4' 5' 1/2"=1'-0" | A

**NOTE**

1. REFER TO THE RFDS FOR THIS NODE FOR THE AZIMUTH INFORMATION.
2. CABLE SHROUD NOT ENTIRELY SHOWN FOR CLARITY.
3. ALL EQUIPMENT TO BE PAINTED TO MATCH EXISTING STRUCTURE.
4. ALL POLE PENETRATION TO BE SEALED AGAINST WATER AND INSECT INTRUSION.

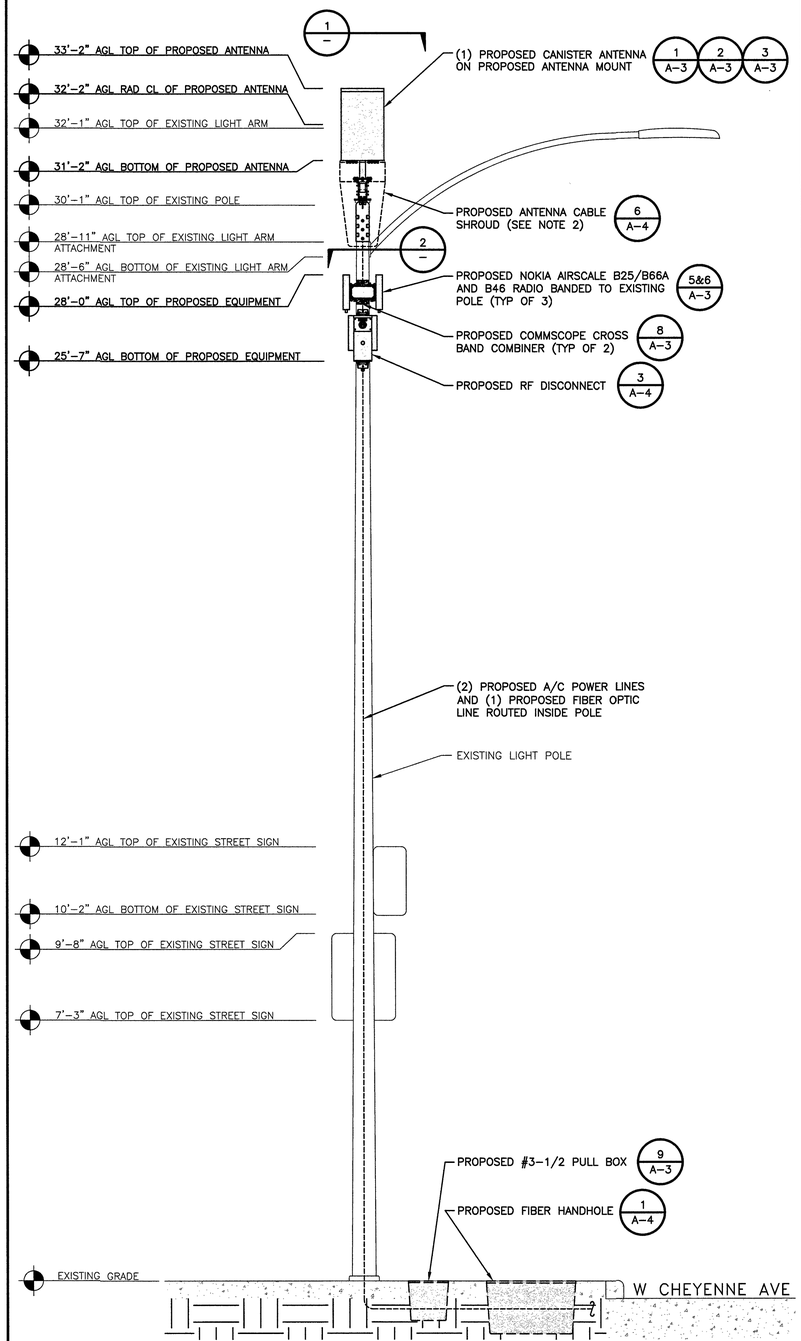


PROPOSED WEST ELEVATION | 12" 6" 0 1' 2' 3' 4' 5' 1/2"=1'-0" | B

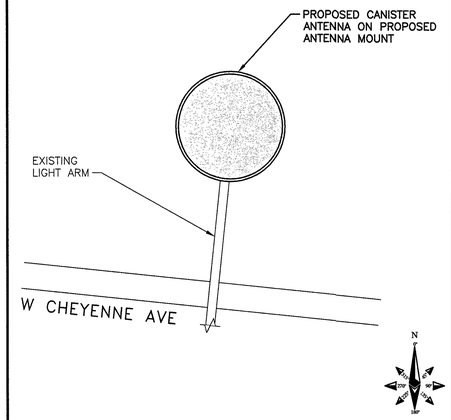


ANTENNA PLAN VIEW | NO SCALE | 1

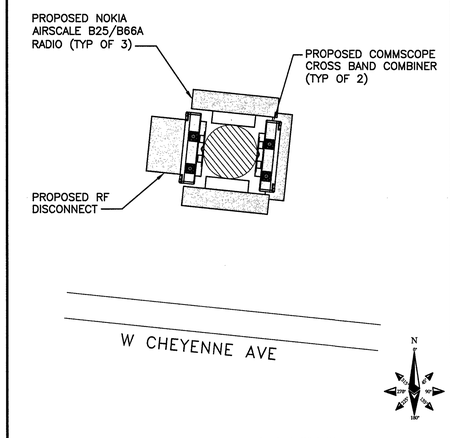


RADIO PLAN VIEW | NO SCALE | 2

NOT USED | NO SCALE | 3


at&t

AT&T MOBILITY
10550 W. CHARLESTON
SUITE B
LAS VEGAS, NV 89135

BLACK & VEATCH

BLACK & VEATCH CORPORATION
8965 S EASTERN AVE
SUITE #325
LAS VEGAS, NV 89123


| | |
|---|---|
| PROJECT NO: | 129084.1501 |
| DRAWN BY: | TPG |
| CHECKED BY: | GAC |

| REV | DATE | DESCRIPTION |
|---|---|---|
| 1 | 05/23/19 | ISSUED FOR CONSTRUCTION |
| 0 | 04/01/19 | ISSUED FOR CONSTRUCTION |

IT IS A VIOLATION OF LAW FOR ANY PERSON, UNLESS THEY ARE ACTING UNDER THE DIRECTION OF A LICENSED PROFESSIONAL ENGINEER, TO ALTER THIS DOCUMENT.


NVL08175F_R03
INTERSECTION OF
CHEYENNE AND MAVERICK
LAS VEGAS, NV 89108
PICO SMALL CELL

SHEET TITLE

POLE ELEVATIONS AND RISER DETAILS

SHEET NUMBER

**A-2** 5

## GAMMA NU DOYZ9X360F12

| | |
|---|---|
| DIAMETER: | 14.4" (365mm) |
| HEIGHT: | 24" (610mm) |
| VOLUME: | 2.26ft³ |
| TOTAL WEIGHT (WITHOUT MOUNT): | 29.7 lbs (13.5 kg) |
| CONNECTOR INTERFACE: | (12) 4.3-10 FEMALE |
| RF CONNECTOR LOCATION: | BOTTOM |

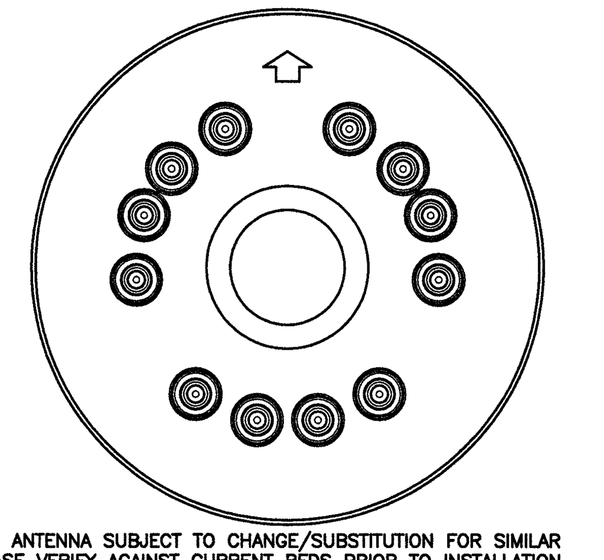

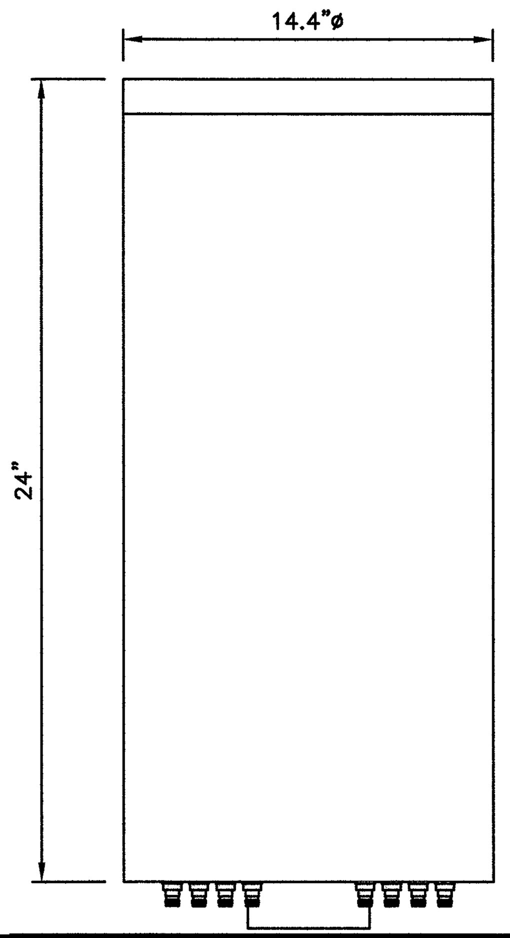


* PROPOSED ANTENNA SUBJECT TO CHANGE/SUBSTITUTION FOR SIMILAR MODEL, PLEASE VERIFY AGAINST CURRENT RFDS PRIOR TO INSTALLATION

ANTENNA SPECIFICATIONS | NO SCALE | 1

## CONCEALFAB 900109

DIMENSIONS HxW: 6.38"x7.00"ø (162.05x178mm)

WEIGHT: 4.66 lbs (2.11 kg)

* DETAIL IS FOR GRAPHIC REPRESENTATION, CONTRACTOR MUST REFERENCE MANUFACTURERS DRAWINGS PRIOR TO CONSTRUCTION.

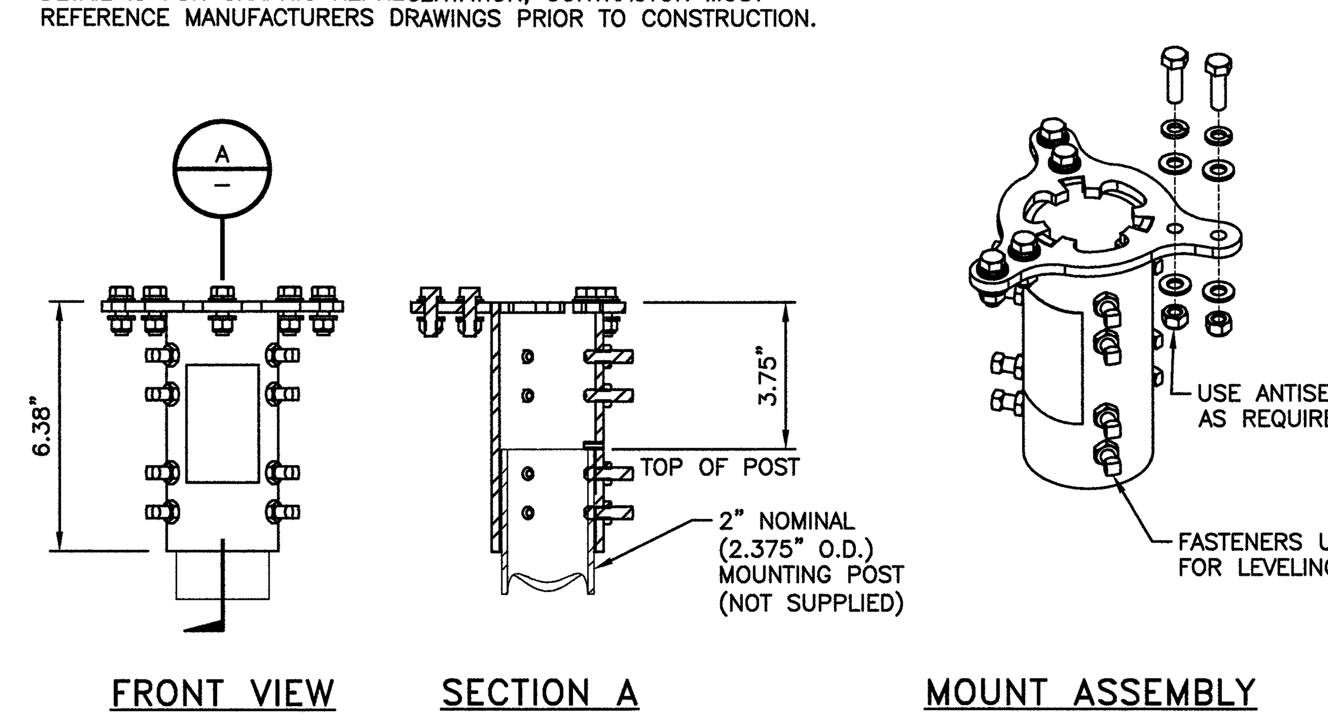


ANTENNA SLEEVE MOUNT | NO SCALE | 2

## CONCEALFAB 900010

DIMENSIONS HxWxL: 17.375"x5.5"x13" (442x140x330 mm)

WEIGHT: 22 lbs (10 kg)

* DETAIL IS FOR GRAPHIC REPRESENTATION, CONTRACTOR MUST REFERENCE MANUFACTURERS DRAWINGS PRIOR TO CONSTRUCTION.

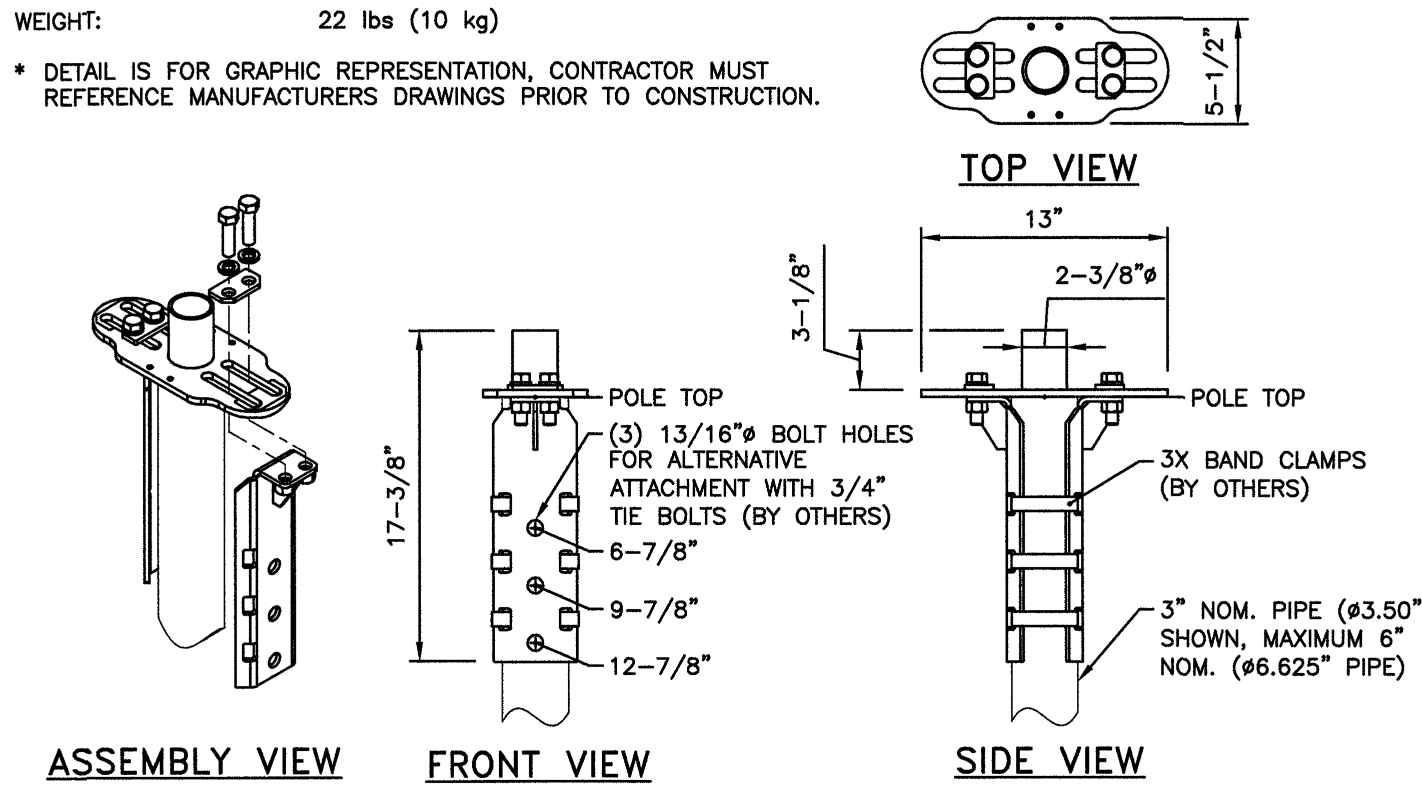


SMALL DIAMETER POLE TOP MOUNT | NO SCALE | 3

NOT USED | NO SCALE | 4

## NOKIA AIRSCALE MICRO B25/B66A RRH

| | |
|---|---|
| DIMENSIONS, HxWxD: | 11.61"x9.65"x2.17" (295x245x55mm) |
| WEIGHT: | 12.79 lbs (5.8 kg) |
| INTERFACES: | (2) CPRI FRONTHAUL PORTS<br>(1) EXTERNAL ALARM PORT |
| POWER CONSUMPTION : | TYP. 110W, MAX. 150W |
| TEMP. RANGE: | -40°C TO +55°C |

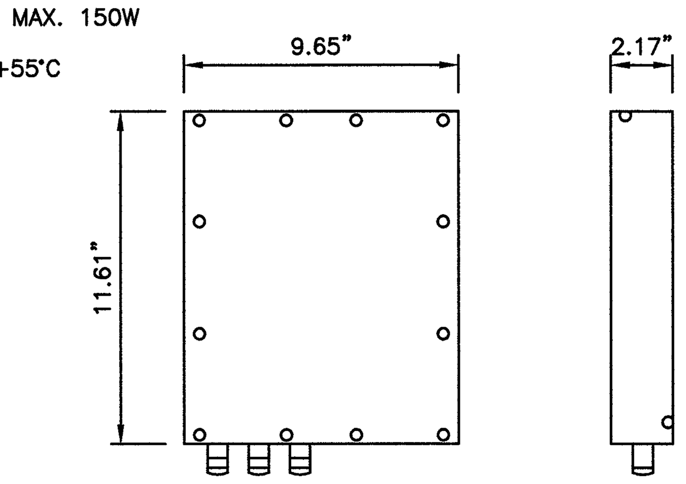


RADIO SPECIFICATIONS | NO SCALE | 5

## NOKIA AIRSCALE B46 (LAA) RRH

| | |
|---|---|
| DIMENSIONS, HxWxD: | 11.6"x9.6"x1.6" (294.64x243.84x40.64mm) |
| WEIGHT: | 11.7 lbs (5.31 kg) |
| INTERFACES: | (1) CPRI SFP INCLUDED |
| ANTENNA CONFIGURATION: | 2T2R |
| RF: | NEX10 PLUS FEMALE |

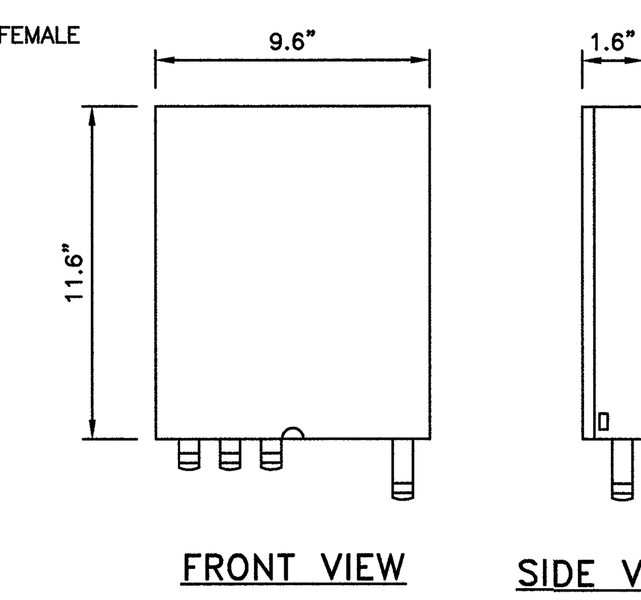


RADIO SPECIFICATIONS | NO SCALE | 6

NOT USED | NO SCALE | 7

## COMMSCOPE CBC1923T-4310 E11F13P06

| | |
|---|---|
| DIMENSIONS, WxDxH: | 4.6"x1.8"x8.3" (116x46x212mm) |
| CONNECTORS: | MODULES: (4) 4.3-10 DIN FEMALE<br>ANT: (2) 4.3-10 DIN FEMALE |
| WEIGHT: | 4.9 lbs (2.2 kg) |

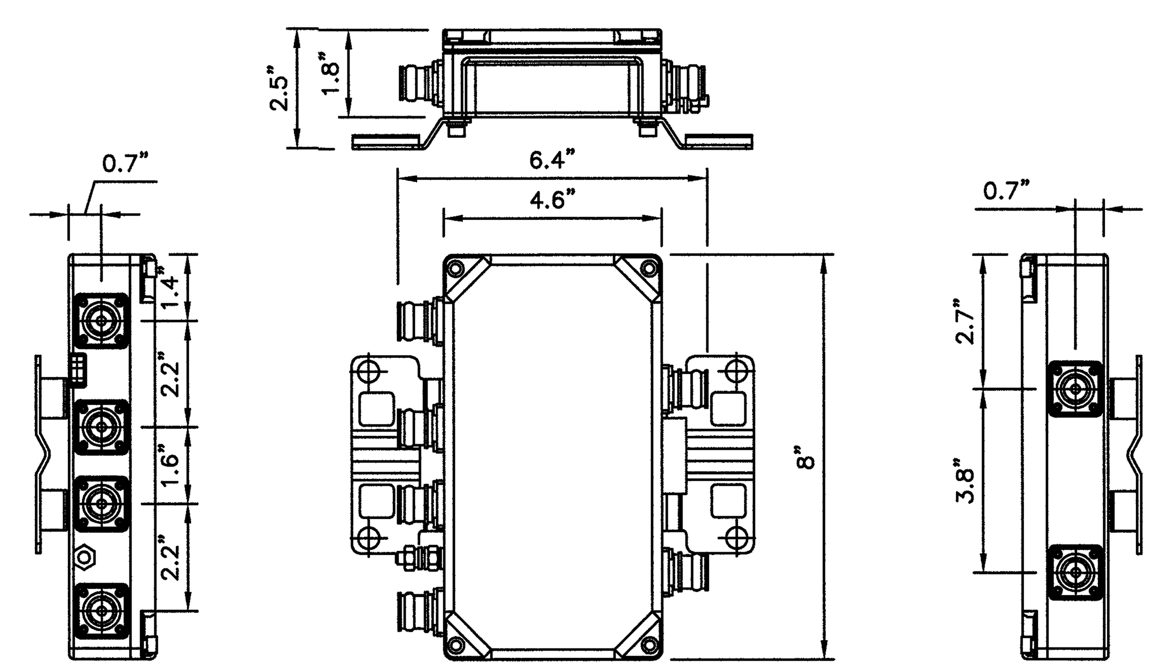


COMBINER SPECIFICATIONS | NO SCALE | 8

**NOTES**

1. COVERS INSTALLED IN TRAFFIC AND OPEN AREAS ACCESSIBLE TO TRAFFIC SHALL BE PER STANDARD DRAWING NO. 327.
2. SEE STANDARD DRAWING NO. 323 FOR COVER GROUNDING.
3. REFER TO SHEET GN-1 FOR ADDITIONAL HANDHOLE NOTES.

| PULL BOX | | | |
|---|---|---|---|
| | SIZE (COMMERCIAL DESIGNATION) | | |
| | 3-1/2 | 5 | 7 |
| A | 15 | 21-3/4 | 30-5/8 |
| B | 10 | 11-3/4 | 17-5/8 |
| C | 3/4 | 2 | 2 |
| D | 19-3/8 | 25 | 34-3/4 |
| E | 14-3/8 | 15 | 21-3/4 |
| F | 12 | 12 | 12 |
| G | N/A | 10-1/4 | 11-1/2 |

NOMINAL DIMENSION IN INCHES

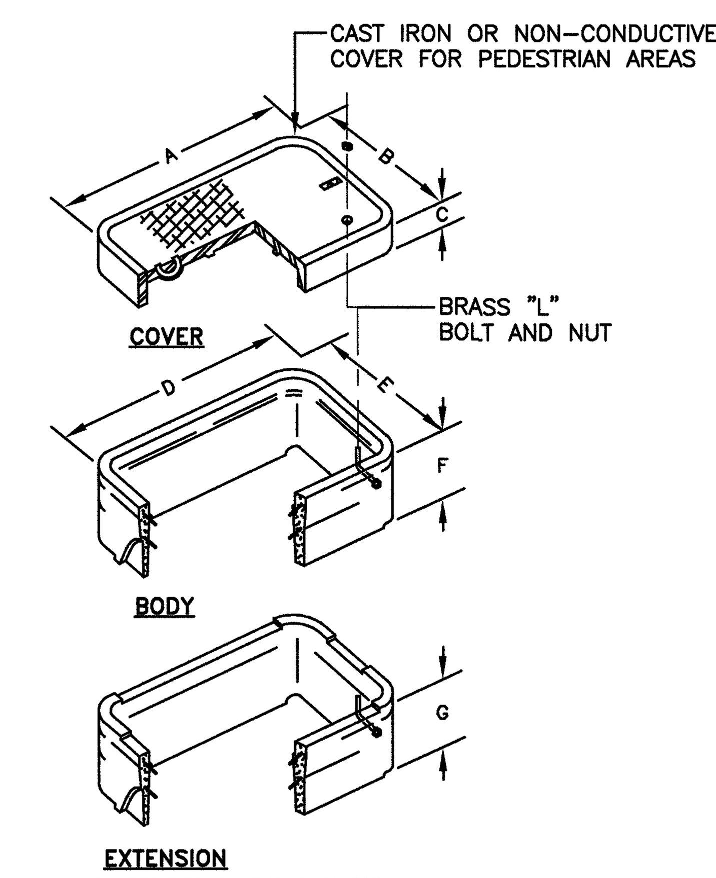


CONCRETE PULL BOX SPECIFICATIONS | NO SCALE | 9

at&t

AT&T MOBILITY
10550 W. CHARLESTON
SUITE B
LAS VEGAS, NV 89135

BLACK & VEATCH

BLACK & VEATCH CORPORATION
8965 S EASTERN AVE
SUITE #325
LAS VEGAS, NV 89123

| | |
|---|---|
| PROJECT NO: | 129084.1501 |
| DRAWN BY: | TPG |
| CHECKED BY: | GAC |

| REV | DATE | DESCRIPTION |
|---|---|---|
| 1 | 05/23/19 | ISSUED FOR CONSTRUCTION |
| 0 | 04/01/19 | ISSUED FOR CONSTRUCTION |

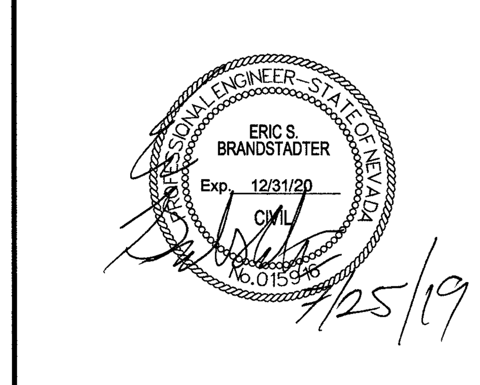


IT IS A VIOLATION OF LAW FOR ANY PERSON, UNLESS THEY ARE ACTING UNDER THE DIRECTION OF A LICENSED PROFESSIONAL ENGINEER, TO ALTER THIS DOCUMENT.

NVL08175F_R03
INTERSECTION OF
CHEYENNE AND MAVERICK
LAS VEGAS, NV 89108
PICO SMALL CELL

SHEET TITLE

EQUIPMENT DETAILS

SHEET NUMBER

**A-3** 6

## FCA243624T-00006 FIBERGLASS/PCX POLYMER CONCRETE ASSEMBLY

DIMENSIONS (LxWxH): 36"x24"x24"

INTERIOR DIMENSIONS (LXWXH): 33"X21"X21"

- USDA/RUS APPROVED
- DROP-IN NAMEPLATE
- SHIPPED ASSEMBLED
- SKID RESISTANT COVER
- STAINLESS STEEL BOLTS
- CAST-IN FLOATING NUT BOX
- INTEGRAL DRAIN HOLES

LOAD RATINGS:

INCIDENTAL TRAFFIC – PARKING LOT, SIDEWALK

CONFORMS TO:
- WUC 3.6
- ASTM C 857
- ANSI/SCTE 77 –"T15/20K"

| INSIDE DIMENSIONS | | |
|---|---|---|
| Length | Width | Depth |
| 33 1/8" | 21 1/2" | 21" |
| 43 7/8" | 32 3/8" | |

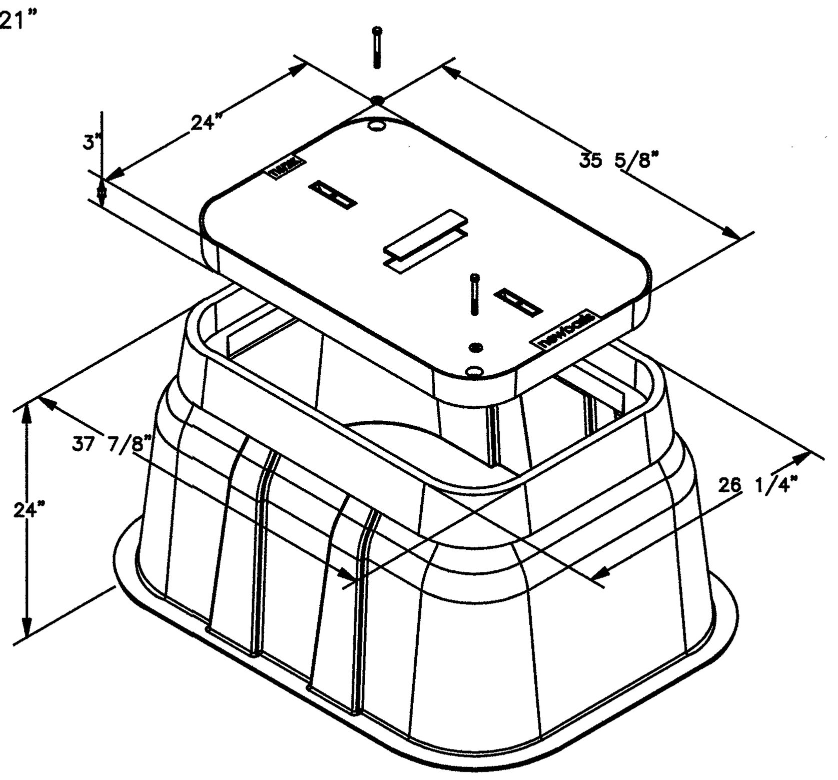


HAND HOLE SPECIFICATIONS | NO SCALE | 1

NOT USED | NO SCALE | 2

## PACTECHSOL PTS90123

DIMENSIONS, HxWxD (VOLUME): 16.15"x6.68"x6.285" (0.39ft³)

OPERATING VOLTAGE: 120 VAC

MAIN BREAKER: 60 amps

NUMBER OF BREAKERS (MAX): (5) UL-489 BREAKERS; 0–25 amp; DUAL SPD

POWER INPUT WIRE SIZE: #14–#4 awg CU-Al

POWER OUTPUT WIRE SIZE: #14–#4 awg CU-Al

NEUTRAL & GROUND CONTACTS: #14–#4 AWG CU-Al

TOTAL WEIGHT: 13 lbs

| BASE P/N | | | P1 | P2 | P3 | P4 | P5 | P6* | | P | | | DESCRIPTION | | |
|---|---|---|---|---|---|---|---|---|---|---|---|---|---|---|---|
| PTS90121- | 6 | - | A | A | A | A | A | # | - | PN | - | | AT&T PICO SUSE | STANDARD | NEQ. 20213 |
| PTS90121- | 6 | - | K | K | K | K | K | # | - | PN | - | | AT&T MICRO SUSE | STANDARD | NEQ. 20214 |
| PTS90123- | 6 | - | A | A | A | A | A | # | - | PN | - | 8 | AT&T PICO SUSE | STANDARD | NEQ. 20283 |
| PTS90123- | 6 | - | K | K | K | K | K | # | - | PN | - | 8 | AT&T MICRO SUSE | STANDARD | NEQ. 20284 |

(POSITION: P1–P6*)

= NO EXTERNAL AC DISCONNECT
8 = INTEGRATED EXTERNAL AC DISCONNECT SWITCH

P = NO EXTERNAL AC DISCONNECT
PN = INTEGRATED EXTERNAL AC DISCONNECT SWITCH

| AMP= | 1 | 2 | 3 | 4 | 5 | 6 | 7 | 8 | 9 | 10 | 11 | 12 | 13 | 14 | 15 | 16 | 17 | 18 | 19 | 20 |
|---|---|---|---|---|---|---|---|---|---|---|---|---|---|---|---|---|---|---|---|---|
| CODE= | 1 | 2 | 3 | 4 | 5 | 6 | 7 | 8 | 9 | A | B | C | D | E | F | G | H | I | J | K |

AMPERAGE CODE (6=60A) 10 Ka MAIN BREAKER

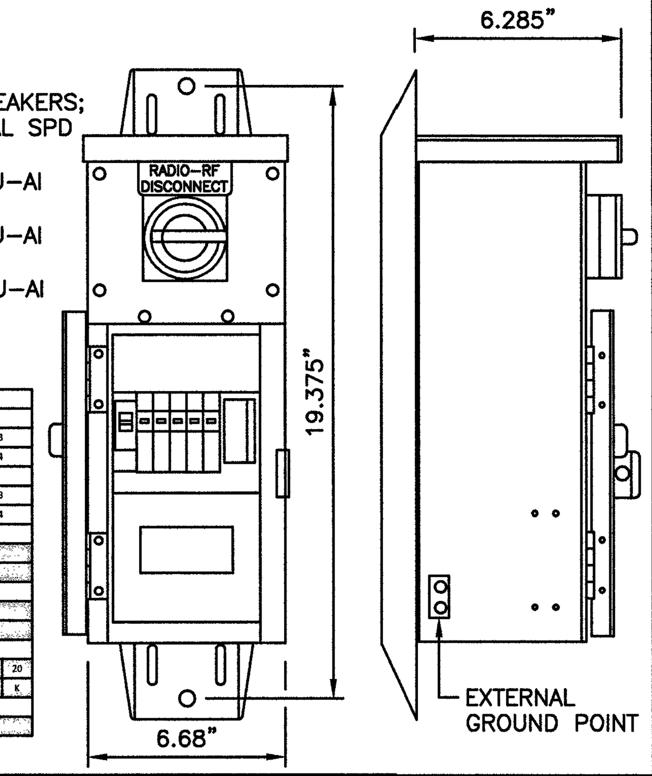


LOAD CENTER DETAIL | NO SCALE | 3

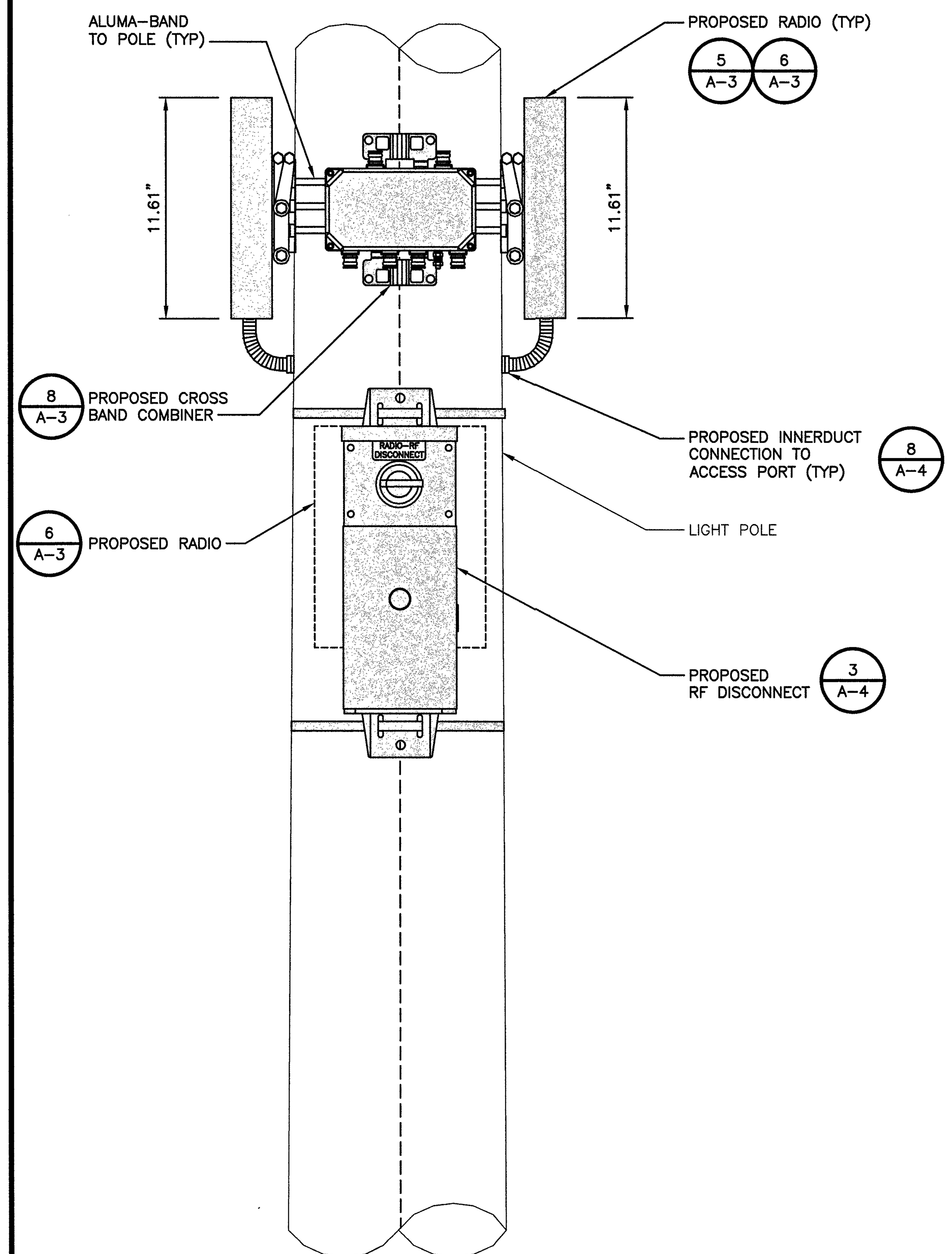


EQUIPMENT PLACEMENT DETAIL | NO SCALE | 4

NOT USED | NO SCALE | 5

## CONCEALFAB 900086

HEIGHT: 28.75" (703.25 mm)

DIAMETER: 15.25" (387.35 mm)

WEIGHT: 7.34 lbs (3.33 kg)

* DETAIL IS FOR GRAPHIC REPRESENTATION, CONTRACTOR MUST REFERENCE MANUFACTURERS DRAWINGS PRIOR TO CONSTRUCTION.

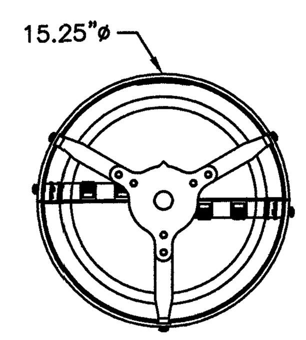


TOP VIEW

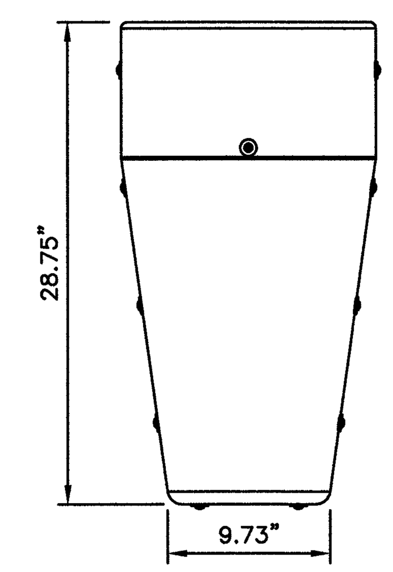


FRONT VIEW

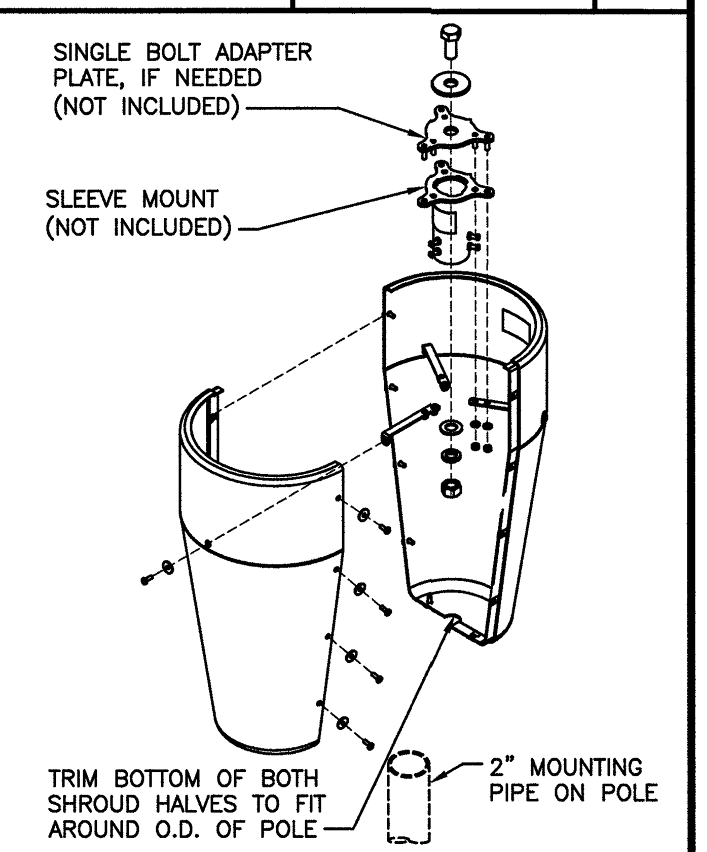


ASSEMBLY VIEW

POLE TOP MOUNT CABLE SHROUD | NO SCALE | 6

NOT USED | NO SCALE | 7

| MINIMUM SIZE OF FILLET WELDS | |
|---|---|
| MATERIAL THICKNESS OF THICKER PART JOINED (IN.) | MINIMUM SIZE OF FILLET WELD* (IN.) |
| TO ¼ INCLUSIVE | ⅛ |
| OVER ¼ TO ½ | 3/16 |
| OVER ½ TO ¾ | ¼ |
| OVER ¾ | 5/16 |

*LEG DIMENSION OF FILLET WELDS. SINGLE-PASS WELDS MUST BE USED.

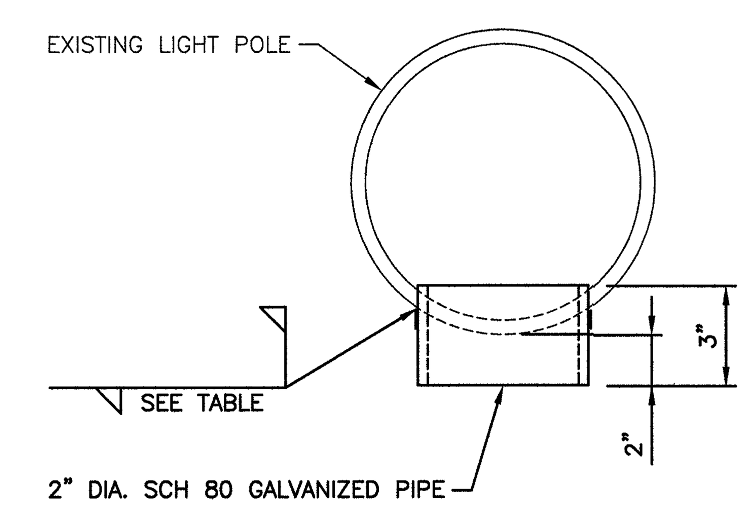


VERTICAL ACCESS PORT DETAIL | NO SCALE | 8

AT&T MOBILITY
10550 W. CHARLESTON
SUITE B
LAS VEGAS, NV 89135

BLACK & VEATCH

BLACK & VEATCH CORPORATION
8965 S EASTERN AVE
SUITE #325
LAS VEGAS, NV 89123

| | |
|---|---|
| PROJECT NO: | 129084.1501 |
| DRAWN BY: | TPG |
| CHECKED BY: | GAC |

| REV | DATE | DESCRIPTION |
|---|---|---|
| 1 | 05/23/19 | ISSUED FOR CONSTRUCTION |
| 0 | 04/01/19 | ISSUED FOR CONSTRUCTION |

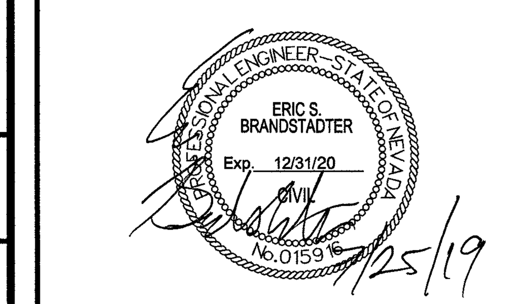


IT IS A VIOLATION OF LAW FOR ANY PERSON, UNLESS THEY ARE ACTING UNDER THE DIRECTION OF A LICENSED PROFESSIONAL ENGINEER, TO ALTER THIS DOCUMENT.

NVL08175F_R03
INTERSECTION OF
CHEYENNE AND MAVERICK
LAS VEGAS, NV 89108
PICO SMALL CELL

SHEET TITLE

EQUIPMENT DETAILS

SHEET NUMBER

**A-4** 7

MYERS MEUG16-M200 CALTRANS TYPE III-BF

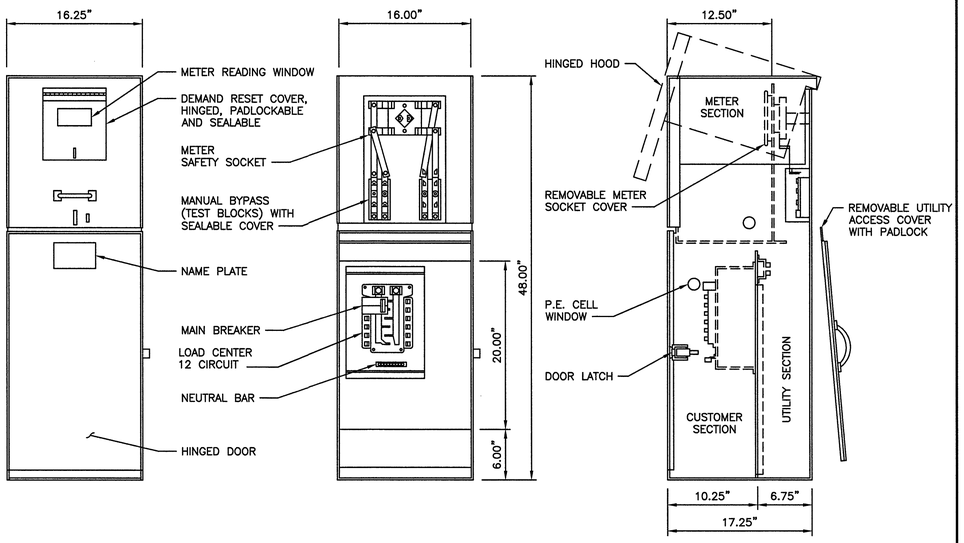


FRONT VIEW | FRONT VIEW – WITHOUT DOOR | SIDE VIEW

METER PEDESTAL DETAIL | NO SCALE | 1

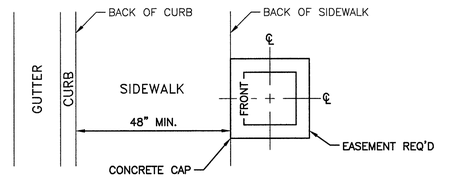


BEHIND SIDEWALK (FOR WIDTHS LESS THAN 5 FT.)

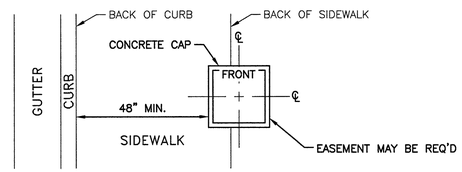


BACK OF SIDEWALK (FOR WIDTHS 5 FT. OR GREATER)

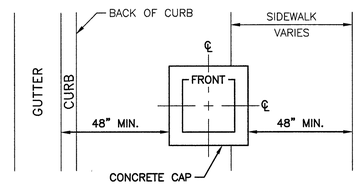


OPEN AREA OR WITH AMENITY ZONE

SERVICE PEDESTAL SETBACK DETAILS (USDCCA DRAWING #331) | NO SCALE | 2

**NOTES**

1. MINIMUM CLEARANCE REQUIRED 36" PER NEC 110-16, TYPICAL FRONT AND BACK.
2. FOUNDATION DIMENSIONS AND DEPTH PER JOB SPECIFICATIONS.

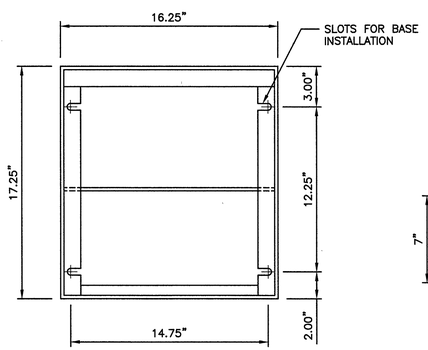


BOTTOM VIEW – MOUNTING SLOT DETAIL

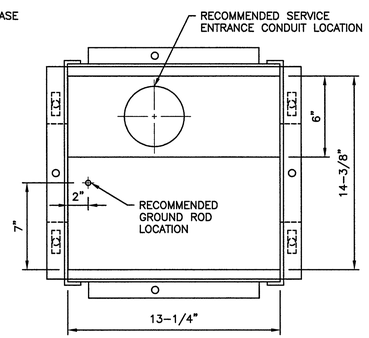


PLAN VIEW

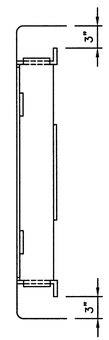


SIDE VIEW

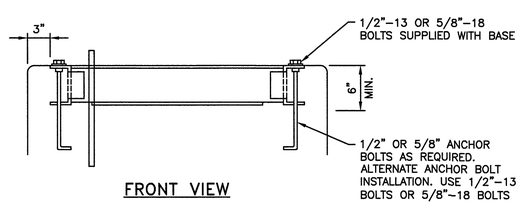


FRONT VIEW

BASEPLATE DETAIL | NO SCALE | 3

**NOTES**

1. BARE COPPER GROUNDING CONDUCTOR SHALL BE LOOPED AROUND ANCHOR BOLTS ONE TIME AND CONNECTED TO EACH ANCHOR BOLT BEFORE CONTINUING DOWN TO THE GROUNDING PLATE.
2. CABINET COVERS SHALL BE PARALLEL WITH CURB.
3. IN AREAS WHERE R/W PERMITS, THE CONCRETE BASE SHALL BE PLACED AT AT THE BACK EDGE OF THE SIDEWALK.
4. CABINET COVERS SHALL OPEN TOWARDS THE STREET WHEN CABINETS ARE LOCATED AT BACK OF WALK. CABINET COVERS SHALL OPEN PARALLEL TO THE SIDEWALK FACING THE DIRECTION OF TRAFFIC WHEN LOCATED WITHIN THE SIDEWALK.
5. WIRE SIZES ARE BASED ON UNDERGROUND FEED.
6. WIRE SIZES SHALL BE INCREASED FOR VOLTAGE DROP LIMITATION WHEN RUN IS LONG.

| NO | 125 AMP SERVICE | 200 AMP SERVICE (C)(CLARK COUNTY) | 200 AMP SERVICE (L)(LAS VEGAS) |
|---|---|---|---|
| 1 | (2) #1/0 THW AND (1) #1/0 WHITE THW IN 2" CONDUIT | (2) #4/0 THW AND (1) #4/0 WHITE THW IN 2" CONDUIT | (2) #3/0 THW AND (1) #3/0 WHITE THW IN 2" CONDUIT |

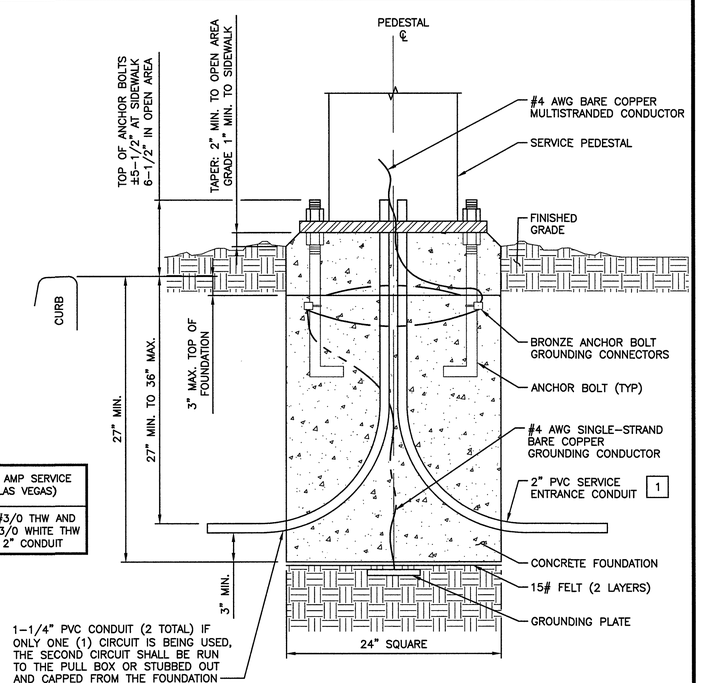


SERVICE PEDESTAL FOUNDATION DETAIL | NO SCALE | 4


at&t

AT&T MOBILITY
10550 W. CHARLESTON
SUITE B
LAS VEGAS, NV 89135

BLACK & VEATCH

BLACK & VEATCH CORPORATION
8965 S EASTERN AVE
SUITE #325
LAS VEGAS, NV 89123


| | |
|---|---|
| PROJECT NO: | 129084.1501 |
| DRAWN BY: | TPG |
| CHECKED BY: | GAC |

| REV | DATE | DESCRIPTION |
|---|---|---|
| 1 | 05/23/19 | ISSUED FOR CONSTRUCTION |
| 0 | 04/01/19 | ISSUED FOR CONSTRUCTION |

PROFESSIONAL ENGINEER – STATE OF NEVADA
ERIC S. BRANDSTADTER
Exp. 12/31/20
CIVIL
7/25/19


IT IS A VIOLATION OF LAW FOR ANY PERSON, UNLESS THEY ARE ACTING UNDER THE DIRECTION OF A LICENSED PROFESSIONAL ENGINEER, TO ALTER THIS DOCUMENT.


NVL08175F_R03
INTERSECTION OF
CHEYENNE AND MAVERICK
LAS VEGAS, NV 89108
PICO SMALL CELL

SHEET TITLE

METER PEDESTAL DETAILS

SHEET NUMBER

**A-5** 8

## NOTICE

RF energy emitted by this device may exceed the FCC's general public exposure limits. Stay at least 1 foot away from the device. Call 800-638-2822 for help if you need access within 1 foot

RF NOTICE DECAL

| NOTICE | ⚠ CAUTION |
|---|---|
| AT&T operates antennas at this structure. | AT&T operates antennas at this structure. |
| Above this point you are entering an area where where radio frequency (RF) fields may exceed the FCC General Population Exposure limits. | Above this point you are entering an area where where radio frequency (RF) fields may exceed the FCC General Occupational Exposure limits. |
| Follow safety guidelines for working in an RF environment. | Follow safety guidelines for working in an RF environment. |
| Keep 1 ft. away from the fronts of antennas. | Keep 1 ft. away from the fronts of antennas. |
| Contact AT&T at 800-638-2822, opt. 9, 3 and follow their instructions prior to performing and maintenance or repairs above this point. | Contact AT&T at 800-638-2822, opt. 9, 3 and follow their instructions prior to performing and maintenance or repairs above this point. |
| This is AT&T Site USID________ | Cell Site USID________ |

EME PLACARD/DECAL

NOTE: SPECIFIC EME PLACARD WILL BE PLACED AFTER EME REPORT

| RF SIGNAGE DETAIL | NO SCALE | 1 |
|---|---|---|

MULTI-TAP CONNECTOR WITH CLEAR INSULATION, DOUBLE-SIDED (PCSB4-4-6Y)

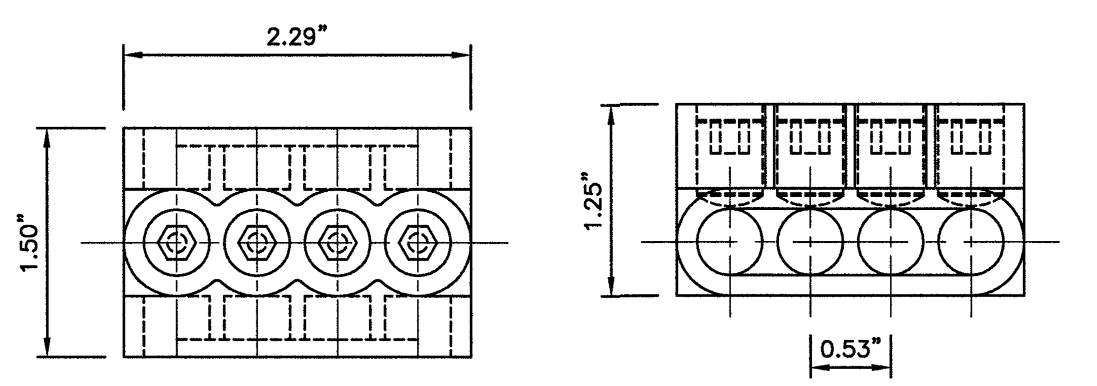


| CONNECTOR DETAIL | NO SCALE | 2 |
|---|---|---|

BUSSMANN – HEB SERIES

| | |
|---|---|
| BREAKAWAY MODEL#: | HEB-AW-RLC-A (5.8" LONG) |
| NON-BREAKAWAY MODEL#: | HEB-AA (4.4" LONG) |
| WIRE RANGE: | #8-16; (2) #12-16 |
| RECOMMENDED FUSES: | BAF, FNM, FNQ, KLM AND KTK |
| AMPS: | UP TO 30A |
| VOLTS: | 600V |

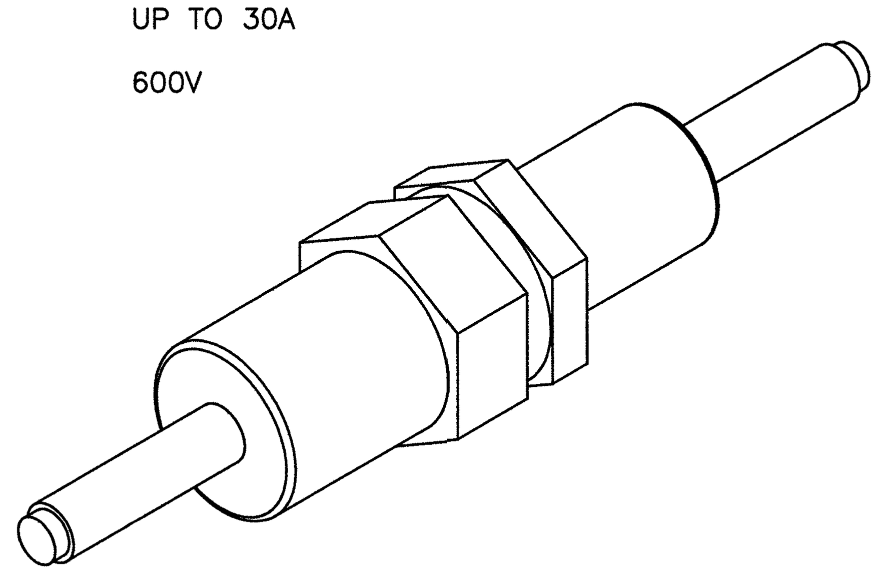

| PROPOSED BREAKAWAY AND NON-BREAKAWAY IN-LINE FUSE HOLDER | NO SCALE | 3 |
|---|---|---|

NOTES

1. CONTRACTOR IS TO FIELD VERIFY ALL EXISTING ITEMS SHOWN ON THE ELECTRICAL ONE-LINE DIAGRAM AND NOTIFY THE ENGINEER OF ANY DISCREPANCIES.
2. ALL NEW CONDUCTOR WIRE TO BE INSTALLED SHALL BE COPPER THWN-2, THW-2, RHW-2, XHHW-2 WIRE UNLESS NOTED OTHERWISE.
3. ALL GROUNDING AND BONDING TO BE PER THE RECOGNIZED EDITION OF THE NATIONAL ELECTRIC CODE (NEC).
4. ALL INSTALLED CONDUCTORS AND SIGNAL CABLES TO BE CLEARLY MARKED "AT&T SMALL CELL" WITH BRASS OR FIBERGLASS TAGS.

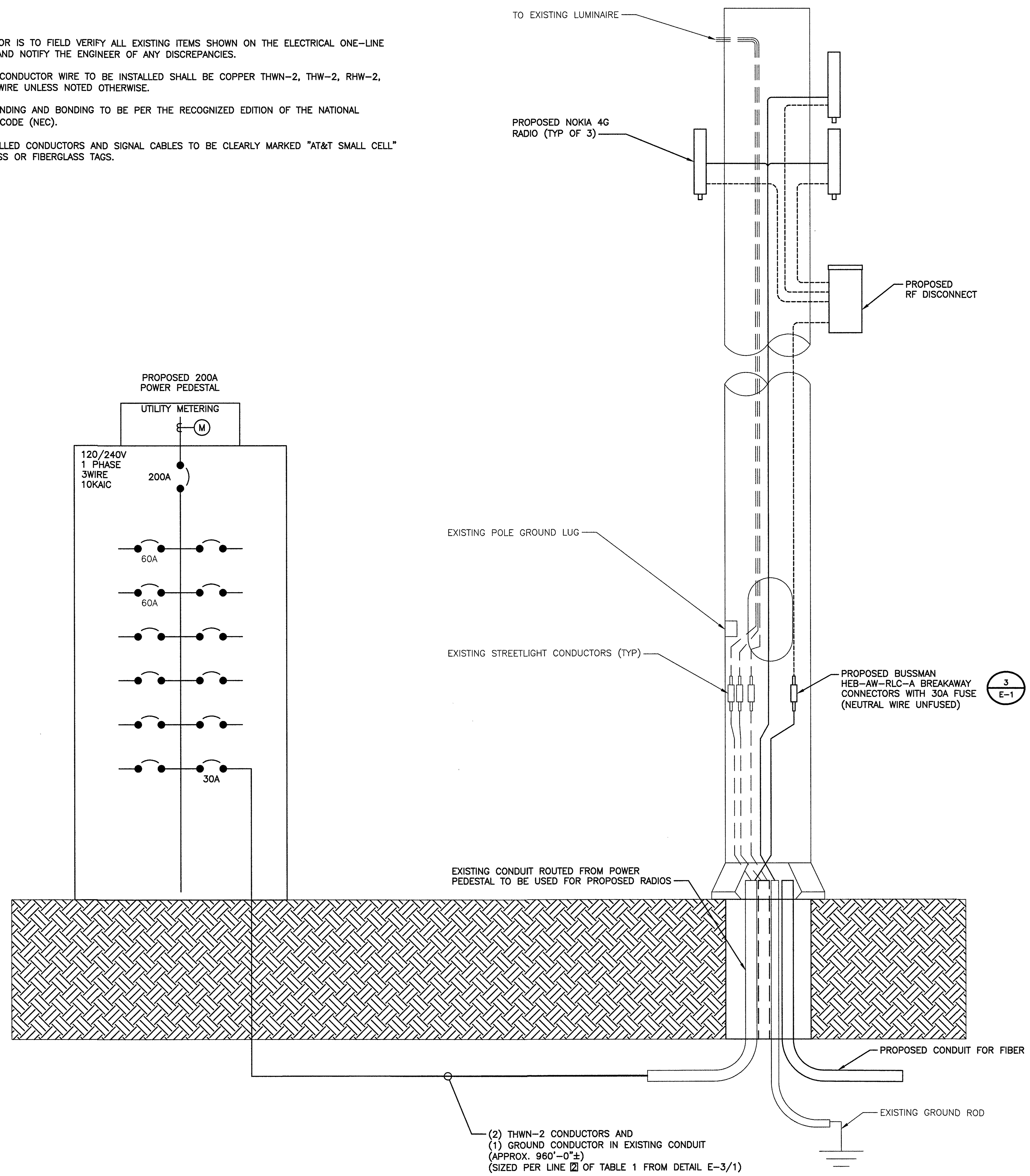


| TYPICAL POLE SITE TEMPLATE | NO SCALE | 4 |
|---|---|---|

at&t

AT&T MOBILITY
10550 W. CHARLESTON
SUITE B
LAS VEGAS, NV 89135

BLACK & VEATCH

BLACK & VEATCH CORPORATION
8965 S EASTERN AVE
SUITE #325
LAS VEGAS, NV 89123

| | |
|---|---|
| PROJECT NO: | 129084.1501 |
| DRAWN BY: | TPG |
| CHECKED BY: | GAC |

| REV | DATE | DESCRIPTION |
|---|---|---|
| 1 | 05/23/19 | ISSUED FOR CONSTRUCTION |
| 0 | 04/01/19 | ISSUED FOR CONSTRUCTION |

PROFESSIONAL ENGINEER – STATE OF NEVADA – DAVID C. HINTON – 4/29/2021 – ELECTRICAL – No. 025351

7/26/19

IT IS A VIOLATION OF LAW FOR ANY PERSON, UNLESS THEY ARE ACTING UNDER THE DIRECTION OF A LICENSED PROFESSIONAL ENGINEER, TO ALTER THIS DOCUMENT.

NVL08175F_R03
INTERSECTION OF
CHEYENNE AND MAVERICK
LAS VEGAS, NV 89108
PICO SMALL CELL

SHEET TITLE

ELECTRICAL DETAILS

SHEET NUMBER

E-1 9

## EXISTING ELECTRICAL LOAD STUDY

EXISTING LOAD.....48.00 AMPS
ALLOWED LOAD 80%.....160.00 AMPS

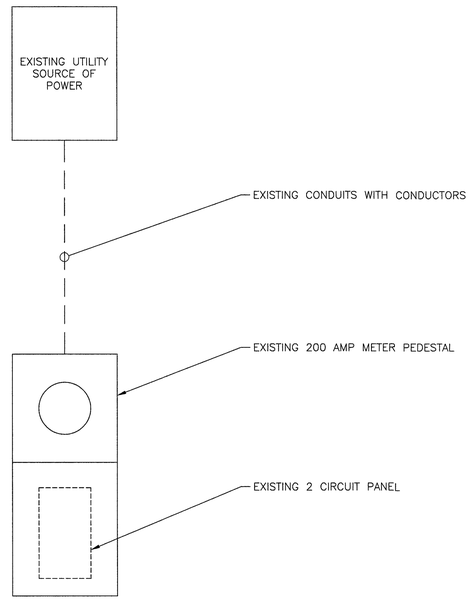


EXISTING SINGLE LINE DIAGRAM | NO SCALE | 1

## PROPOSED ELECTRICAL LOAD STUDY

EXISTING LOAD.....48.00 AMPS
SAFETY FACTOR 125%.....60.00 AMPS
PROPOSED LOAD.....2.34 AMPS
TOTAL LOAD.....62.34 AMPS
ALLOWED LOAD 80% OF 200 AMPS.....160.00 AMPS

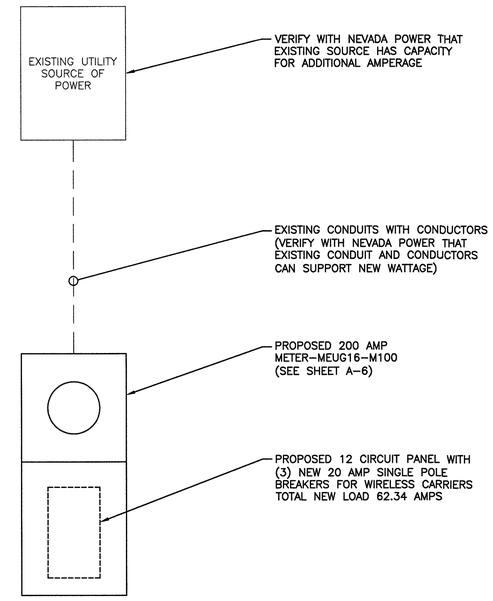


PROPOSED SINGLE LINE DIAGRAM | NO SCALE | 2

| | | | | | | | | | | | | | | | | |
|---|---|---|---|---|---|---|---|---|---|---|---|---|---|---|---|---|
| **Site Name:** | *CHEYENNE AND MAVERICK* | | | | | **MODEL NUMBER:** | *PROPOSED METER AND LOAD CENTER PEDESTAL* | | | | | | | | | |
| **SITE NUMBER:** | *CRAN_NVL08175F_R03* | | | | | **PHASE:** | **1** | | | **WIRE:** | | | **3** | | | |
| **VOLTAGE:** | **240** | **/120** | **Volts AC** | | | **BUSS RATING:** | **200** | **AMPS** | | | | | | | | |
| **MAIN BREAKER:** | **200** | **AMPS** | | | | | | | | | | | | | | |
| **MOUNT:** | *SURFACE* | | | | | | | | | | | | | | | |
| **ENCLOSURE TYPE:** | *NEMA 3R* | | | | | | | | | | | | | | | |
| **PANEL STATUS:** | *PROPOSED* | | | | | | | | | | | | | | | |
| **CKT** | **LOAD DESCRIPTION** | **BREAKER AMPS** | **BREAKER POLES** | **BREAKER STATUS** | **SERVICE LOAD VA** | **Demand Factor** | **USAGE FACTOR** | **PHASE A VA** | **PHASE B VA** | **USAGE FACTOR** | **Demand Factor** | **SERVICE LOAD VA** | **BREAKER STATUS** | **BREAKER POLES** | **BREAKER AMPS** | **LOAD DESCRIPTION** | **CKT** |
| **1** | **MAINS** | **200** | **2** | **NEW** | **0** | **1.00** | **1.00** | ***563*** | | **1.25** | **1.00** | **450** | **NEW** | **1** | **30** | **PACTECHSOL PTS90122-3-AA777-PN-8** | **2** |
| **3** | | | | | **0** | **1.00** | **1.00** | | ***0*** | | | | | | | | **4** |
| **5** | EXISTING STREET LIGHT | 60 | 2 | ON | 5760 | 1.00 | 1.25 | ***7200*** | | | | | | | | | **6** |
| **7** | | | | | 5760 | 1.00 | 1.25 | | ***7200*** | | | | | | | | **8** |
| **9** | | | | | | | | ***0*** | | | | | | | | | **10** |
| **11** | | | | | | | | | ***0*** | | | | | | | | **12** |
| | | | | | | | | ***PHASE A*** | ***PHASE B*** | | | | | | | | |
| | | | | | | | | ***7763*** | ***7200*** | **VA** | | | | | | | |
| | | | | | | | | | **TOTAL** | **KVA** | **14.96** | | | | | | |
| | | | | | | | | | | **AMPS** | **62.34** | **≤ 80% OF MAIN BREAKER** | | | | | |

PROPOSED PANEL SCHEDULE AND CALCS | NO SCALE | 3


at&t

AT&T MOBILITY
10550 W. CHARLESTON
SUITE B
LAS VEGAS, NV 89135

BLACK & VEATCH

BLACK & VEATCH CORPORATION
8965 S EASTERN AVE
SUITE #325
LAS VEGAS, NV 89123


| | |
|---|---|
| PROJECT NO: | 129084.1501 |
| DRAWN BY: | TPG |
| CHECKED BY: | GAC |

| REV | DATE | DESCRIPTION |
|---|---|---|
| 1 | 05/23/19 | ISSUED FOR CONSTRUCTION |
| 0 | 04/01/19 | ISSUED FOR CONSTRUCTION |

PROFESSIONAL ENGINEER, STATE OF NEVADA
DAVID C. HINTON
EXP. 6/29/2021
ELECTRICAL
No. 025351
7/26/19


IT IS A VIOLATION OF LAW FOR ANY PERSON, UNLESS THEY ARE ACTING UNDER THE DIRECTION OF A LICENSED PROFESSIONAL ENGINEER, TO ALTER THIS DOCUMENT.


NVL08175F_R03
INTERSECTION OF
CHEYENNE AND MAVERICK
LAS VEGAS, NV 89108
PICO SMALL CELL

SHEET TITLE
ELECTRICAL CALCULATIONS AND SCHEDULES

SHEET NUMBER
**E-2** 1D

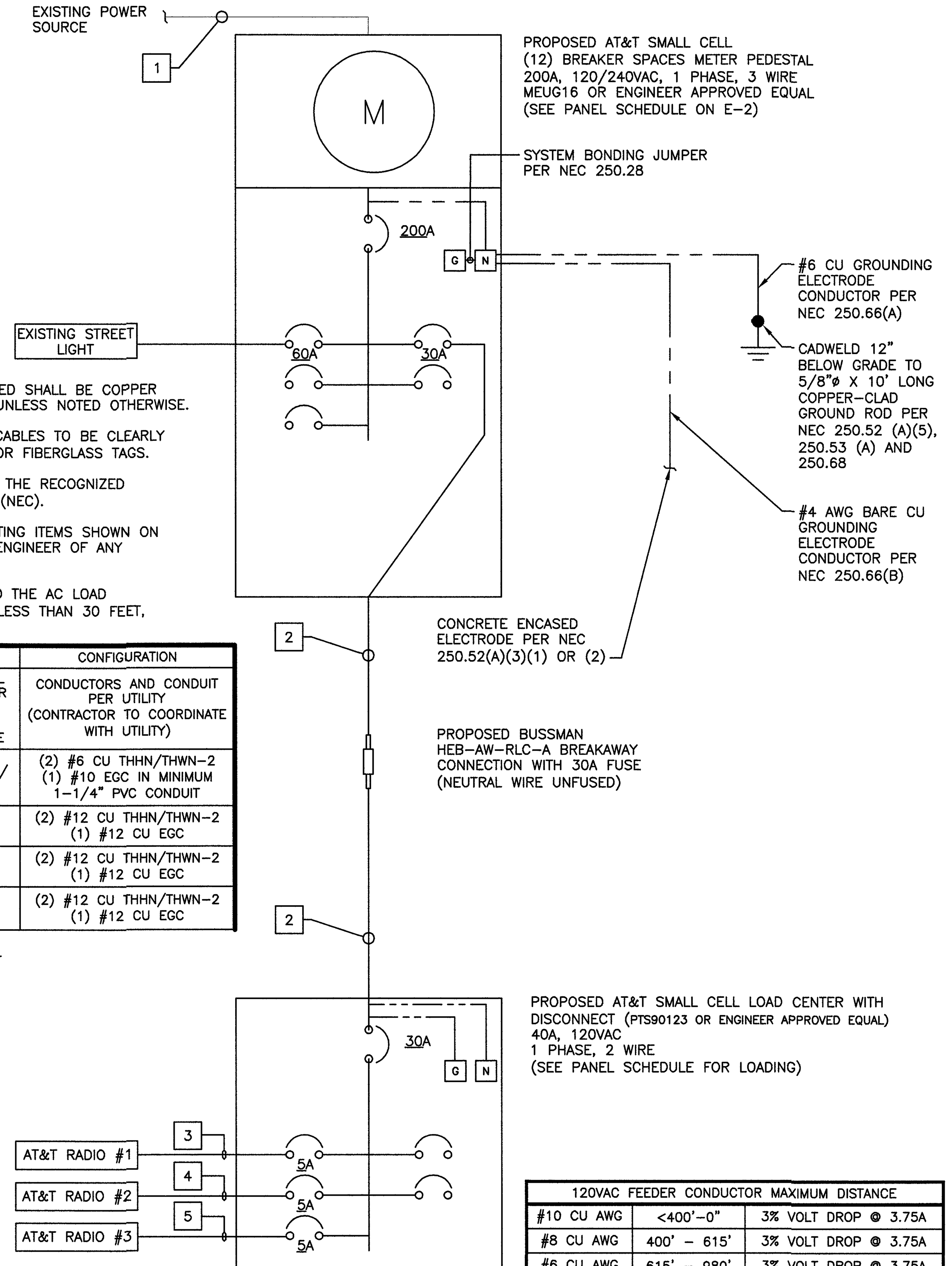


## NOTES:

1. ALL NEW CONDUCTOR WIRE TO BE INSTALLED SHALL BE COPPER THWN-2, THW-2, RHW-2, XHHW-2 WIRE UNLESS NOTED OTHERWISE.
2. ALL INSTALLED CONDUCTORS AND SIGNAL CABLES TO BE CLEARLY MARKED "AT&T SMALL CELL" WITH BRASS OR FIBERGLASS TAGS.
3. ALL GROUNDING AND BONDING TO BE PER THE RECOGNIZED EDITION OF THE NATIONAL ELECTRIC CODE (NEC).
4. CONTRACTOR IS TO FIELD VERIFY ALL EXISTING ITEMS SHOWN ON THE ONE-LINE DIAGRAM AND NOTIFY THE ENGINEER OF ANY DISCREPANCIES.
5. THE DISTANCE FROM THE TRANSFORMER TO THE AC LOAD CENTER/SAFETY SWITCH AND TO RRHS IS LESS THAN 30 FEET. VOLTAGE DROP IS NEGLIGIBLE.

| NO | FROM | TO | CONFIGURATION |
|---|---|---|---|
| 1 | UTILITY P.O.C. | PROPOSED SMALL CELL 200A METER PEDESTAL, 120/240VAC, 1 PHASE, 3 WIRE | CONDUCTORS AND CONDUIT PER UTILITY (CONTRACTOR TO COORDINATE WITH UTILITY) |
| 2 | PROPOSED SMALL CELL 200A METERED PEDESTAL | AC LOAD CENTER/ SAFETY SWITCH | (2) #6 CU THHN/THWN-2 (1) #10 EGC IN MINIMUM 1-1/4" PVC CONDUIT |
| 3 | AC LOAD CENTER/ SAFETY SWITCH | AT&T RADIO #1 | (2) #12 CU THHN/THWN-2 (1) #12 CU EGC |
| 4 | AC LOAD CENTER/ SAFETY SWITCH | AT&T RADIO #2 | (2) #12 CU THHN/THWN-2 (1) #12 CU EGC |
| 5 | AC LOAD CENTER/ SAFETY SWITCH | AT&T RADIO #3 | (2) #12 CU THHN/THWN-2 (1) #12 CU EGC |

TABLE 1

| 120VAC FEEDER CONDUCTOR MAXIMUM DISTANCE | | |
|---|---|---|
| #10 CU AWG | <400'-0" | 3% VOLT DROP @ 3.75A |
| #8 CU AWG | 400' - 615' | 3% VOLT DROP @ 3.75A |
| #6 CU AWG | 615' - 980' | 3% VOLT DROP @ 3.75A |
| #4 CU AWG | 980' - 1550' | 3% VOLT DROP @ 3.75A |
| #3 CU AWG | 1550' - 1920' | 3% VOLT DROP @ 3.75A |

| | | | | | | | | | | | | | | | | | |
|---|---|---|---|---|---|---|---|---|---|---|---|---|---|---|---|---|---|
| Site Name: | CHEYENNE AND MAVERICK | | | | | | MODEL NUMBER: | | PACTECHSOL PTS90123 | | | | | | | | |
| SITE NUMBER: | NVL08175F_R03 | | | | | | PHASE: | | 1 | | | WIRE: | | | 3 | | |
| VOLTAGE: | | 120 | | Volts AC | | | BUSS RATING: | | 40 | AMPS | | | | | | | |
| MAIN BREAKER: | | 30 | AMPS | | | | | | | | | | | | | | |
| MOUNT: | | SURFACE | | | | | | | | | | | | | | | |
| ENCLOSURE TYPE: | | NEMA 3R | | | | | | | | | | | | | | | |
| PANEL STATUS: | | PROPOSED | | | | | | | | | | | | | | | |
| CKT | LOAD DESCRIPTION | BREAKER AMPS | BREAKER POLES | BREAKER STATUS | SERVICE LOAD VA | Demand Factor | USAGE FACTOR | PHASE A VA | PHASE B VA | USAGE FACTOR | Demand Factor | SERVICE LOAD VA | BREAKER STATUS | BREAKER POLES | BREAKER AMPS | LOAD DESCRIPTION | CKT |
| 1 | NOKIA AIRSCALE MICRO B25/B66 RRH | 5 | 1 | NEW | 150 | 1.00 | 1.00 | 150 | | | | | | | | | 2 |
| 2 | | | | | | | | | 0 | | | | | | | | 4 |
| 3 | NOKIA AIRSCALE MICRO B25/B66 RRH | 5 | 1 | NEW | 150 | 1.00 | 1.00 | 150 | | | | | | | | | 6 |
| 4 | | | | | | | | | 0 | | | | | | | | 8 |
| 5 | NOKIA AIRSCALE MICRO B25/B66 RRH | 5 | 1 | NEW | 150 | 1.00 | 1.00 | 150 | | | | | | | | | 10 |
| | | | | | | | | PHASE A | PHASE B | | | | | | | | |
| | 1. PANEL SCHEDULE LOADING AND CIRCUIT ARRANGEMENTS REFLECT POST-CONSTRUCTION EQUIPMENT. | | | | | | | 450 | 0 | VA | | | | | | | |
| | | | | | | | | | TOTAL | KVA | 0.45 | | | | | | |
| | | | | | | | | | | AMPS | 3.75 | ≤ 80% OF MAIN BREAKER | | | | | |

ELECTRICAL ONE-LINE DIAGRAM (PICO) — NO SCALE — 1

NOT USED — NO SCALE — 2

at&t

AT&T MOBILITY
10550 W. CHARLESTON
SUITE B
LAS VEGAS, NV 89135

BLACK & VEATCH

BLACK & VEATCH CORPORATION
8965 S EASTERN AVE
SUITE #325
LAS VEGAS, NV 89123

| | |
|---|---|
| PROJECT NO: | 129084.1501 |
| DRAWN BY: | TPG |
| CHECKED BY: | GAC |

| REV | DATE | DESCRIPTION |
|---|---|---|
| 1 | 05/23/19 | ISSUED FOR CONSTRUCTION |
| 0 | 04/01/19 | ISSUED FOR CONSTRUCTION |

PROFESSIONAL ENGINEER STATE OF NEVADA DAVID L. HINTON Exp. 6/29/2021 ELECTRICAL No. 025351

7/24/19

IT IS A VIOLATION OF LAW FOR ANY PERSON, UNLESS THEY ARE ACTING UNDER THE DIRECTION OF A LICENSED PROFESSIONAL ENGINEER, TO ALTER THIS DOCUMENT.

NVL08175F_R03
INTERSECTION OF
CHEYENNE AND MAVERICK
LAS VEGAS, NV 89108
PICO SMALL CELL

SHEET TITLE
ELECTRICAL ONE-LINE DIAGRAM

SHEET NUMBER
**E-3**

11

NOTES

1. FOR CONDUIT SIZE AND WIRING REQUIREMENTS FOR STREETLIGHT SERVICE, SEE STANDARD DRAWING NO. 332.S2 FOR LAS VEGAS AND CLARK COUNTY ONLY AND 332.S1 FOR ALL OTHER ENTITIES.
2. SEE STANDARD DRAWING NO. 321, 332.S1, OR 332.S2.

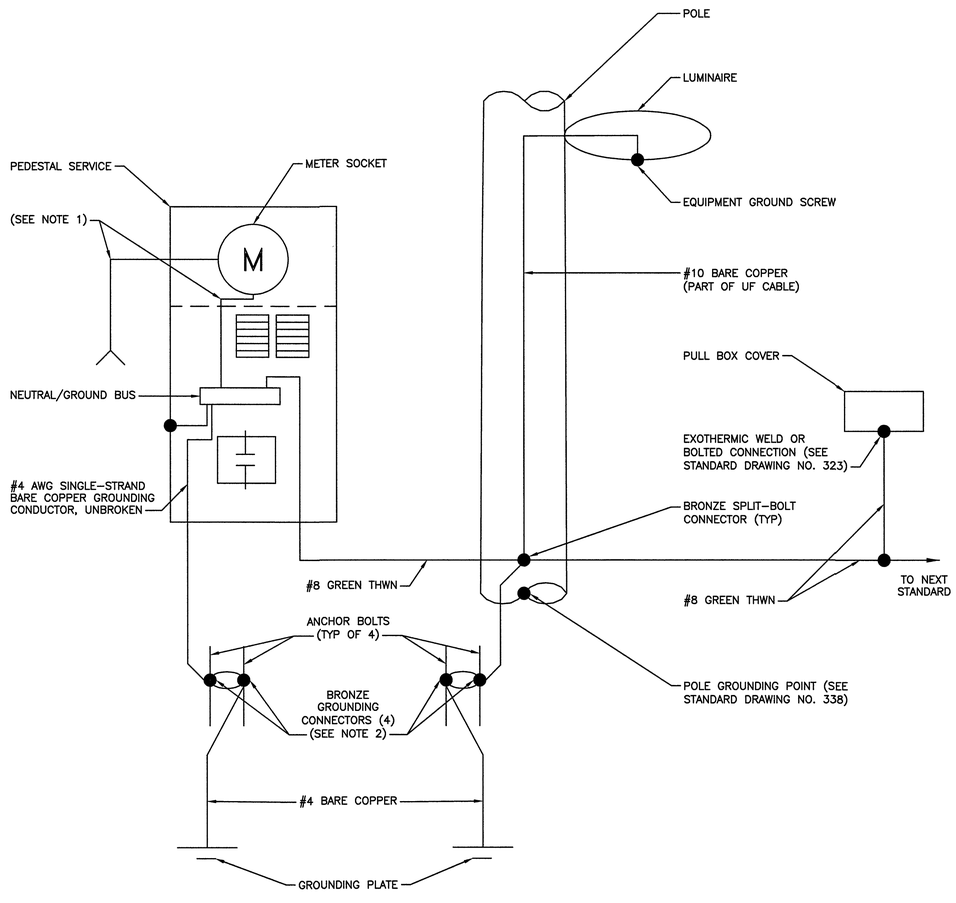


METER PEDESTAL GROUNDING DIAGRAM | NO SCALE | 1

NOTES

1. 125 AMP SERVICE: 1 #4 WHITE THW
   200 AMP SERVICE: 1 #1/0 WHITE THW

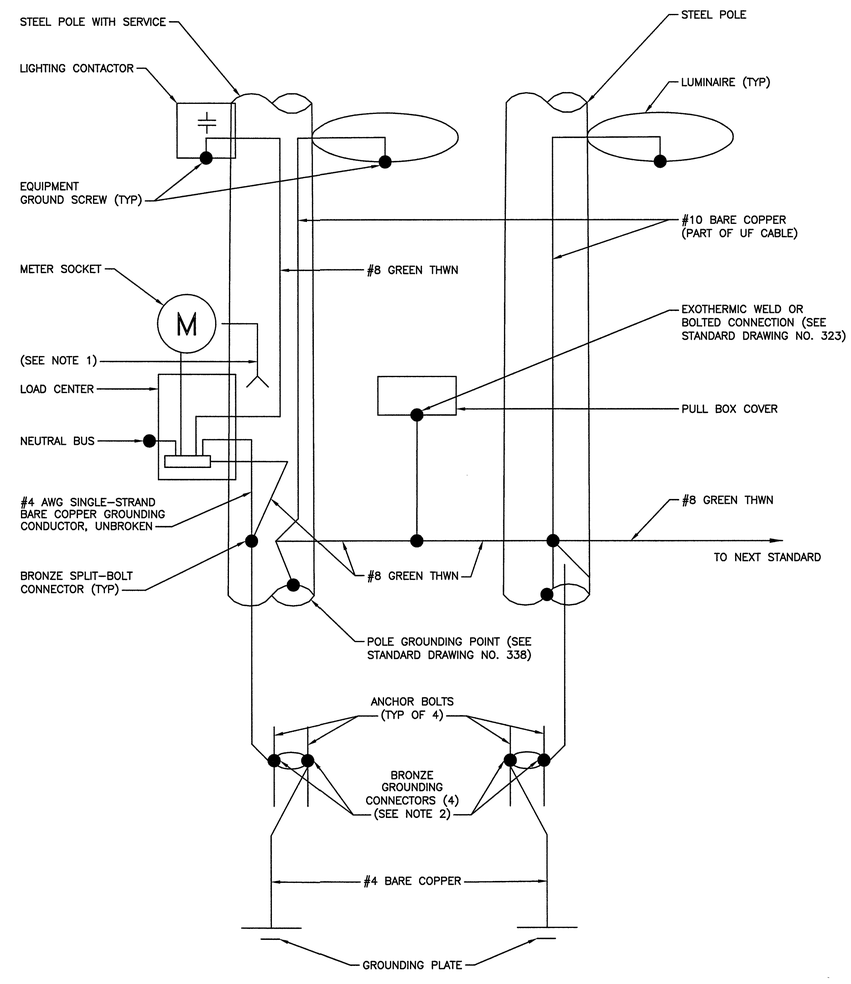


POLE EQUIPMENT GROUNDING DIAGRAM | NO SCALE | 2


at&t

AT&T MOBILITY
10550 W. CHARLESTON
SUITE B
LAS VEGAS, NV 89135

BLACK & VEATCH

BLACK & VEATCH CORPORATION
8965 S EASTERN AVE
SUITE #325
LAS VEGAS, NV 89123


| | |
|---|---|
| PROJECT NO: | 129084.1501 |
| DRAWN BY: | TPG |
| CHECKED BY: | GAC |

| REV | DATE | DESCRIPTION |
|---|---|---|
| 1 | 05/23/19 | ISSUED FOR CONSTRUCTION |
| 0 | 04/01/19 | ISSUED FOR CONSTRUCTION |

PROFESSIONAL ENGINEER — DAVID HINTON — EXP. 6/30/2021 — ELECTRICAL — STATE OF NEVADA — NO. 025351

7/26/19


IT IS A VIOLATION OF LAW FOR ANY PERSON, UNLESS THEY ARE ACTING UNDER THE DIRECTION OF A LICENSED PROFESSIONAL ENGINEER, TO ALTER THIS DOCUMENT.


NVL08175F_R03
INTERSECTION OF
CHEYENNE AND MAVERICK
LAS VEGAS, NV 89108
PICO SMALL CELL

SHEET TITLE

GROUNDING DIAGRAMS

SHEET NUMBER

G-1

12

1. FOR THE PURPOSE OF CONSTRUCTION DRAWINGS, THE FOLLOWING DEFINITIONS SHALL APPLY:
   GENERAL CONTRACTOR – OVERLAND CONTRACTING INC. (B&V)
   SUBCONTRACTOR – CONTRACTOR (CONSTRUCTION)
   OWNER – AT&T
2. ALL SITE WORK SHALL BE COMPLETED AS INDICATED ON THE DRAWINGS.
3. GENERAL CONTRACTOR AND SUBCONTRACTOR SHALL VISIT THE SITE AND SHALL BECOME FAMILIAR WITH ALL CONDITIONS AFFECTING THE PROPOSED WORK AND SHALL MAKE PROVISIONS. GENERAL CONTRACTOR AND SUBCONTRACTOR SHALL BE RESPONSIBLE FOR FAMILIARIZING HIMSELF WITH ALL CONTRACT DOCUMENTS, FIELD CONDITIONS, DIMENSIONS, AND CONFIRMING THAT THE WORK MAY BE ACCOMPLISHED AS SHOWN PRIOR TO PROCEEDING WITH CONSTRUCTION. ANY DISCREPANCIES SHALL BE BROUGHT TO THE ATTENTION OF THE ENGINEER PRIOR TO THE COMMENCEMENT OF WORK.
4. ALL MATERIALS FURNISHED AND INSTALLED SHALL BE IN STRICT ACCORDANCE WITH ALL APPLICABLE CODES, REGULATIONS, AND ORDINANCES. GENERAL CONTRACTOR SHALL ISSUE ALL APPROPRIATE NOTICES AND COMPLY WITH ALL LAWS, ORDINANCES, RULES, REGULATIONS, AND LAWFUL ORDERS OF ANY PUBLIC AUTHORITY REGARDING THE PERFORMANCE OF WORK.
5. ALL WORK CARRIED OUT SHALL COMPLY WITH ALL APPLICABLE MUNICIPAL AND UTILITY COMPANY SPECIFICATIONS AND LOCAL JURISDICTIONAL CODES, ORDINANCES, AND APPLICABLE REGULATIONS.
6. UNLESS NOTED OTHERWISE, THE WORK SHALL INCLUDE FURNISHING MATERIALS, EQUIPMENT, APPURTENANCES, AND LABOR NECESSARY TO COMPLETE ALL INSTALLATIONS AS INDICATED ON THE DRAWINGS.
7. PLANS ARE NOT TO BE SCALED. THESE PLANS ARE INTENDED TO BE A DIAGRAMMATIC OUTLINE ONLY UNLESS OTHERWISE NOTED. DIMENSIONS SHOWN ARE TO FINISH SURFACES UNLESS OTHERWISE NOTED. SPACING BETWEEN EQUIPMENT IS THE MINIMUM REQUIRED CLEARANCE. THEREFORE, IT IS CRITICAL TO FIELD VERIFY DIMENSIONS, SHOULD THERE BE ANY QUESTIONS REGARDING THE CONTRACT DOCUMENTS, THE SUBCONTRACTOR SHALL BE RESPONSIBLE FOR OBTAINING A CLARIFICATION FROM THE ENGINEER PRIOR TO PROCEEDING WITH THE WORK. DETAILS ARE INTENDED TO SHOWN DESIGN INTENT. MODIFICATIONS MAY BE REQUIRED TO SUIT JOB DIMENSIONS OR CONDITIONS AND SUCH MODIFICATIONS SHALL BE INCLUDED AS PART OF WORK AND PREPARED BY THE ENGINEER PRIOR TO PROCEEDING WITH WORK.
8. THE SUBCONTRACTOR SHALL INSTALL ALL EQUIPMENT AND MATERIALS IN ACCORDANCE WITH MANUFACTURER'S RECOMMENDATIONS UNLESS SPECIFICALLY STATED OTHERWISE.
9. IF THE SPECIFIED EQUIPMENT CANNOT BE INSTALLED AS SHOWN ON THESE DRAWINGS, THE SUBCONTRACTOR SHALL PROPOSE AN ALTERNATIVE INSTALLATION SPACE FOR APPROVAL BY THE ENGINEER AND DSA PRIOR TO PROCEEDING.
10. GENERAL CONTRACTOR SHALL BE RESPONSIBLE FOR THE SAFETY OF WORK AREA, ADJACENT AREAS AND BUILDING OCCUPANTS THAT ARE LIKELY TO BE AFFECTED BY THE WORK UNDER THIS CONTRACT. WORK SHALL CONFORM TO ALL OSHA REQUIREMENTS AND THE LOCAL JURISDICTION.
11. GENERAL CONTRACTOR SHALL COORDINATE WORK AND SCHEDULE WORK ACTIVITIES WITH OTHER DISCIPLINES.
12. ERECTION SHALL BE DONE IN A WORKMANLIKE MANNER BY COMPETENT EXPERIENCED WORKMAN IN ACCORDANCE WITH APPLICABLE CODES AND THE BEST ACCEPTED PRACTICE. ALL MEMBERS SHALL BE LAID PLUMB AND TRUE AS INDICATED ON THE DRAWINGS.
13. SEAL ANY PENETRATION WITH UL LISTED MATERIALS APPROVED BY LOCAL JURISDICTION. SUBCONTRACTOR SHALL KEEP AREA CLEAN, HAZARD FREE, AND DISPOSE OF ALL DEBRIS.
14. WORK PREVIOUSLY COMPLETED IS REPRESENTED BY LIGHT SHADED LINES AND NOTES. THE SCOPE OF WORK FOR THIS PROJECT IS REPRESENTED BY DARK SHADED LINES AND NOTES. SUBCONTRACTOR SHALL NOTIFY THE GENERAL CONTRACTOR OF ANY EXISTING CONDITIONS THAT DEVIATE FROM THE DRAWINGS PRIOR TO BEGINNING CONSTRUCTION.
15. SUBCONTRACTOR SHALL PROVIDE WRITTEN NOTICE TO THE CONSTRUCTION MANAGER 48 HOURS PRIOR TO COMMENCEMENT OF WORK.
16. THE SUBCONTRACTOR SHALL PROTECT EXISTING IMPROVEMENTS, PAVEMENTS, CURBS, LANDSCAPING AND STRUCTURES. ANY DAMAGED PART SHALL BE REPAIRED AT SUBCONTRACTOR'S EXPENSE TO THE SATISFACTION OF THE OWNER.
17. THE SUBCONTRACTOR SHALL CONTACT UTILITY LOCATING SERVICES PRIOR TO THE START OF CONSTRUCTION.
18. GENERAL CONTRACTOR SHALL COORDINATE AND MAINTAIN ACCESS FOR ALL TRADES AND SUBCONTRACTORS TO THE SITE AND/OR BUILDING.
19. THE GENERAL CONTRACTOR SHALL BE RESPONSIBLE FOR SECURITY OF THE SITE FOR THE DURATION OF CONSTRUCTION UNTIL JOB COMPLETION.
20. THE GENERAL CONTRACTOR SHALL MAINTAIN IN GOOD CONDITION ONE COMPLETE SET OF PLANS WITH ALL REVISIONS, ADDENDA, AND CHANGE ORDERS ON THE PREMISES AT ALL TIMES.
21. THE GENERAL CONTRACTOR AND SUBCONTRACTOR SHALL PROVIDE PORTABLE FIRE EXTINGUISHERS WITH A RATING OF NOT LESS THAN 2–A OT 2–A:10–B:C AND SHALL BE WITHIN 25 FEET OF TRAVEL DISTANCE TO ALL PORTIONS OF WHERE THE WORK IS BEING COMPLETED DURING CONSTRUCTION.
22. ALL EXISTING ACTIVE SEWER, WATER, GAS, ELECTRIC, AND OTHER UTILITIES SHALL BE PROTECTED AT ALL TIMES, AND WHERE REQUIRED FOR THE PROPER EXECUTION OF THE WORK, SHALL BE RELOCATED AS DIRECTED BY THE ENGINEER. EXTREME CAUTION SHOULD BE USED BY THE SUBCONTRACTOR WHEN EXCAVATING OR DRILLING PIERS AROUND OR NEAR UTILITIES. SUBCONTRACTOR SHALL PROVIDE SAFETY TRAINING FOR THE WORKING CREW. THIS SHALL INCLUDE BUT NOT BE LIMITED TO A) FALL PROTECTION, B) CONFINED SPACE, C) ELECTRICAL SAFETY, AND D) TRENCHING & EXCAVATION.
23. ALL EXISTING INACTIVE SEWER, WATER, GAS, ELECTRIC AND OTHER UTILITIES, WHICH INTERFERE WITH THE EXECUTION OF THE WORK, SHALL BE REMOVED, CAPPED, PLUGGED OR OTHERWISE DISCONNECTED AT POINTS WHICH WILL NOT INTERFERE WITH THE EXECUTION OF THE WORK, AS DIRECTED BY THE RESPONSIBLE ENGINEER, AND SUBJECT TO THE APPROVAL OF THE OWNER AND/OR LOCAL UTILITIES.
24. THE AREAS OF THE OWNER'S PROPERTY DISTURBED BY THE WORK AND NOT COVERED BY THE TOWER, EQUIPMENT OR DRIVEWAY, SHALL BE GRADED TO A UNIFORM SLOPE, AND STABILIZED TO PREVENT EROSION.
25. SUBCONTRACTOR SHALL MINIMIZE DISTURBANCE TO THE EXISTING SITE DURING CONSTRUCTION. EROSION CONTROL MEASURES, IF REQUIRED DURING CONSTRUCTION, SHALL BE IN CONFORMANCE WITH THE FEDERAL AND LOCAL JURISDICTION FOR EROSION AND SEDIMENT CONTROL.
26. NO FILL OR EMBANKMENT MATERIAL SHALL BE PLACED ON FROZEN GROUNDING. FROZEN MATERIALS, SNOW OR ICE SHALL NOT BE PLACED IN ANY FILL OR EMBANKMENT.
27. THE SUBGRADE SHALL BE BROUGHT TO A SMOOTH UNIFORM GRADE AND COMPACTED TO 95 PERCENT STANDARD PROCTOR DENSITY UNDER PAVEMENT AND STRUCTURES AND 80 PERCENT STANDARD PROCTOR DENSITY IN OPEN SPACE. ALL TRENCHES IN PUBLIC RIGHT OF WAY SHALL BE BACKFILLED WITH FLOWABLE FILL OR OTHER MATERIAL PRE–APPROVED BY THE LOCAL JURISDICTION.
28. ALL NECESSARY RUBBISH, STUMPS, DEBRIS, STICKS, STONES, AND OTHER REFUSE SHALL BE REMOVED FROM THE SITE AND DISPOSED OF IN A LAWFUL MANNER.
29. ALL BROCHURES, OPERATING AND MAINTENANCE MANUALS, CATALOGS, SHOP DRAWINGS, AND OTHER DOCUMENTS SHALL BE TURNED OVER TO THE GENERAL CONTRACTOR AT COMPLETION OF CONSTRUCTION AND PRIOR TO PAYMENT.
30. CONTRACTOR SHALL SUBMIT A COMPLETE SET OF AS–BUILT REDLINES TO THE GENERAL CONTRACTOR UPON COMPLETION OF PROJECT AND PRIOR TO FINAL PAYMENT.
31. CONTRACTOR SHALL LEAVE PREMISES IN A CLEAN CONDITION.
32. THE PROPOSED FACILITY WILL BE UNMANNED AND DOES NOT REQUIRE POTABLE WATER OR SEWER SERVICE, AND IS NOT FOR HUMAN HABITAT (NO HANDICAP ACCESS REQUIRED).
33. OCCUPANCY IS LIMITED TO PERIODIC MAINTENANCE AND INSPECTION, APPROXIMATELY 2 TIMES PER MONTH, BY AT&T TECHNICIANS.
34. NO OUTDOOR STORAGE OR SOLID WASTE CONTAINERS ARE PROPOSED.
35. ALL MATERIAL SHALL BE FURNISHED AND WORK SHALL BE PERFORMED IN ACCORDANCE WITH THE LATEST REVISION AT&T MOBILITY GROUNDING STANDARD "TECHNICAL SPECIFICATION FOR CONSTRUCTION OF GSM/GPRS WIRELESS SITES" AND "TECHNICAL SPECIFICATION FOR FACILITY GROUNDING". IN CASE OF A CONFLICT BETWEEN THE CONSTRUCTION SPECIFICATION AND THE DRAWINGS, THE DRAWINGS SHALL GOVERN.
36. CONTRACTORS SHALL BE RESPONSIBLE FOR OBTAINING ALL PERMITS AND INSPECTIONS REQUIRED FOR CONSTRUCTION. IF CONTRACTOR CANNOT OBTAIN A PERMIT, THEY MUST NOTIFY THE GENERAL CONTRACTOR IMMEDIATELY.
37. CONTRACTOR SHALL REMOVE ALL TRASH AND DEBRIS FROM THE SITE ON A DAILY BASIS.
38. INFORMATION SHOWN ON THESE DRAWINGS WAS OBTAINED FROM SITE VISITS AND/OR DRAWINGS PROVIDED BY THE SITE OWNER. CONTRACTORS SHALL NOTIFY THE ENGINEER OF ANY DISCREPANCIES PRIOR TO ORDERING MATERIAL OR PROCEEDING WITH CONSTRUCTION.
39. NO WHITE STROBE LIGHTS ARE PERMITTED. LIGHTING IF REQUIRED, WILL MEET FAA STANDARDS AND REQUIREMENTS.
40. ALL COAXIAL CABLE INSTALLATIONS TO FOLLOW MANUFACTURER'S INSTRUCTIONS AND RECOMMENDATIONS.
41. CONTRACTOR TO ENSURE LOCATES ARE COMPLETED PRIOR TO DIGGING IN THE ROW. IF UTILITIES ARE INDICATED WITHIN 3 FEET OF THE PROPOSED ROUTE, OR IF CROSSING EXISTING UTILITY, CONTRACTOR TO POTHOLE EXISTING UTILITY TO DETERMINE DEPTH AND EXACT LOCATION PRIOR TO CONSTRUCTION. IF UTILITY IS DAMAGED DURING THE INSTALLATION OF THE NEW CONDUIT, IT SHALL BE THE CONTRACTORS RESPONSIBILITY TO CONTACT THE UTILITY IMMEDIATELY AND IT IS ALSO THE CONTRACTORS RESPONSIBILITY TO HAVE ANY DAMAGE FIXED AND/OR REPAIRED PRIOR TO CLOSING THE EXCAVATION.

## GENERAL NOTES

EXOTHERMIC CONNECTION
MECHANICAL CONNECTION
CHEMICAL ELECTROLYTIC GROUNDING SYSTEM
TEST CHEMICAL ELECTROLYTIC GROUNDING SYSTEM
EXOTHERMIC WITH INSPECTION SLEEVE
GROUNDING BAR
GROUND ROD
TEST GROUND ROD WITH INSPECTION SLEEVE
SINGLE POLE SWITCH
DUPLEX RECEPTACLE
DUPLEX GFCI RECEPTACLE
FLUORESCENT LIGHTING FIXTURE (2) TWO LAMPS 48–T8
SMOKE DETECTION (DC)
EMERGENCY LIGHTING (DC)
SECURITY LIGHT W/PHOTOCELL LITHONIA ALXW LED–1–25A400/51K–SR4–120–PE–DDBTXD
CHAIN LINK FENCE
WOOD/WROUGHT IRON FENCE
WALL STRUCTURE
LEASE AREA
PROPERTY LINE (PL)
SETBACKS
ICE BRIDGE
CABLE TRAY
WATER LINE
UNDERGROUND POWER
UNDERGROUND TELCO
OVERHEAD POWER
OVERHEAD TELCO
UNDERGROUND TELCO/POWER
ABOVE GROUND POWER
ABOVE GROUND TELCO
ABOVE GROUND TELCO/POWER
ABOVE GROUND FIBER
ABOVE GROUND FIBER/POWER
UNDERGROUND FIBER
UNDERGROUND FIBER/POWER
UNDERGROUND DUCT
ABOVE GROUND POWER/AC
ABOVE GROND POWER/DC
SECTION REFERENCE
DETAIL REFERENCE
ELEVATION REFERENCE
BREAKLINE

## LEGEND

| | |
|---|---|
| AB | ANCHOR BOLT |
| ABV | ABOVE |
| AC | ALTERNATING CURRENT |
| ADDL | ADDITIONAL |
| AFF | ABOVE FINISHED FLOOR |
| AFG | ABOVE FINISHED GRADE |
| AIC | AMPERAGE INTERRUPTION CAPACITY |
| ALUM | ALUMINUM |
| ALT | ALTERNATE |
| ANT | ANTENNA |
| APPROX | APPROXIMATE |
| ARCH | ARCHITECTURAL |
| ATS | AUTOMATIC TRANSFER SWITCH |
| AWG | AMERICAN WIRE GAUGE |
| BATT | BATTERY |
| BLDG | BUILDING |
| BLK | BLOCK |
| BLKG | BLOCKING |
| BM | BEAM |
| BTC | BARE TINNED COPPER CONDUCTOR |
| BOF | BOTTOM OF FOOTING |
| CAB | CABINET |
| CANT | CANTILEVERED |
| CEC | CALIFORNIA ELECTRIC CODE |
| CHG | CHARGING |
| CLG | CEILING |
| CLR | CLEAR |
| COL | COLUMN |
| COMM | COMMON |
| CONC | CONCRETE |
| CONSTR | CONSTRUCTION |
| DBL | DOUBLE |
| DC | DIRECT CURRENT |
| DEPT | DEPARTMENT |
| DF | DOUGLAS FIR |
| DIA | DIAMETER |
| DIAG | DIAGONAL |
| DIM | DIMENSION |
| DWG | DRAWING |
| DWL | DOWEL |
| (E) | EXISTING |
| EA | EACH |
| EC | ELECTRICAL CONDUCTOR |
| EL | ELEVATION |
| ELEC | ELECTRICAL |
| EMT | ELECTRICAL METALLIC TUBING |
| ENG | ENGINEER |
| EQ | EQUAL |
| EXP | EXPANSION |
| EXT | EXTERIOR |
| FAB | FABRICATION |
| FF | FINISH FLOOR |
| FG | FINISH GRADE |
| FIF | FACILITY INTERFACE FRAME |
| FIN | FINISH(ED) |
| FLR | FLOOR |
| FDN | FOUNDATION |
| FOC | FACE OF CONCRETE |
| FOM | FACE OF MASONRY |
| FOS | FACE OF STUD |
| FOW | FACE OF WALL |
| FS | FINISH SURFACE |
| FT | FOOT |
| FTG | FOOTING |
| GA | GAUGE |
| GEN | GENERATOR |
| GFCI | GROUND FAULT CIRCUIT INTERRUPTER |
| GLB | GLUE LAMINATED BEAM |
| GLV | GALVANIZED |
| GPS | GLOBAL POSITIONING SYSTEM |
| GND | GROUND |
| GSM | GLOBAL SYSTEM FOR MOBILE |
| HDR | HEADER |
| HGR | HANGER |
| HVAC | HEAT/VENTILATION/AIR CONDITIONING |
| HT | HEIGHT |
| IGR | INTERIOR GROUND RING |
| IN | INCH |
| INT | INTERIOR |
| LB(S) | POUND(S) |
| LF | LINEAR FEET |
| LTE | LONG TERM EVOLUTION |
| MAS | MASONRY |
| MAX | MAXIMUM |
| MB | MACHINE BOLT |
| MECH | MECHANICAL |
| MFR | MANUFACTURER |
| MGB | MASTER GROUND BAR |
| MIN | MINIMUM |
| MISC | MISCELLANEOUS |
| MTL | METAL |
| MTS | MANUAL TRANSFER SWITCH |
| MW | MICROWAVE |
| (N) | NEW |
| NEC | NATIONAL ELECTRIC CODE |
| NO.(#) | NUMBER |
| NTS | NOT TO SCALE |
| OC | ON CENTER |
| OPNG | OPENING |
| (P) | PROPOSED |
| P/C | PRECAST CONCRETE |
| PCS | PERSONAL COMMUNICATION SERVICES |
| PCU | PRIMARY CONTROL UNIT |
| PRC | PRIMARY RADIO CABINET |
| PP | POLARIZING PRESERVING |
| PSF | POUNDS PER SQUARE FOOT |
| PSI | POUNDS PER SQUARE INCH |
| PT | PRESSURE TREATED |
| PWR | POWER CABINET |
| QTY | QUANTITY |
| RAD | RADIUS |
| RECT | RECTIFIER |
| REF | REFERENCE |
| REINF | REINFORCEMENT |
| REQ'D | REQUIRED |
| RET | REMOTE ELECTRIC TILT |
| RMC | RIGID METALLIC CONDUIT |
| RRH | REMOTE RADIO HEAD |
| RRU | REMOTE RADIO UNIT |
| RWY | RACEWAY |
| SCH | SCHEDULE |
| SHT | SHEET |
| SIAD | SMART INTEGRATED DEVICE |
| SIM | SIMILAR |
| SPEC | SPECIFICATION |
| SQ | SQUARE |
| SS | STAINLESS STEEL |
| STD | STANDARD |
| STL | STEEL |
| STRUCT | STRUCTURAL |
| TEMP | TEMPORARY |
| THK | THICKNESS |
| TMA | TOWER MOUNTED AMPLIFIER |
| TN | TOE NAIL |
| TOA | TOP OF ANTENNA |
| TOC | TOP OF CURB |
| TOF | TOP OF FOUNDATION |
| TOP | TOP OF PLATE (PARAPET) |
| TOS | TOP OF STEEL |
| TOW | TOP OF WALL |
| TVSS | TRANSIENT VOLTAGE SUPPRESSION SYSTEM |
| TYP | TYPICAL |
| UG | UNDERGROUND |
| UL | UNDERWRITERS LABORATORY |
| UNO | UNLESS NOTED OTHERWISE |
| UMTS | UNIVERSAL MOBILE TELECOMMUNICATIONS SYSTEM |
| UPS | UNITERRUPTIBLE POWER SYSTEM (DC POWER PLANT) |
| VIF | VERIFIED IN FIELD |
| W | WIDE |
| W/ | WITH |
| WD | WOOD |
| W.P. | WORK POINT |
| WP | WEATHERPROOF |
| WT | WEIGHT |

## ABBREVIATIONS


at&t
AT&T MOBILITY
10550 W. CHARLESTON
SUITE B
LAS VEGAS, NV 89135

BLACK & VEATCH
BLACK & VEATCH CORPORATION
8965 S EASTERN AVE
SUITE #325
LAS VEGAS, NV 89123


| | |
|---|---|
| PROJECT NO: | 129084.1501 |
| DRAWN BY: | TPG |
| CHECKED BY: | GAC |

| REV | DATE | DESCRIPTION |
|---|---|---|
| 1 | 05/23/19 | ISSUED FOR CONSTRUCTION |
| 0 | 04/01/19 | ISSUED FOR CONSTRUCTION |

PROFESSIONAL ENGINEER — STATE OF CALIFORNIA
ERIC S. BRANDSTADTER
Exp. 12/31/20
No. 0159
5/23/19


IT IS A VIOLATION OF LAW FOR ANY PERSON, UNLESS THEY ARE ACTING UNDER THE DIRECTION OF A LICENSED PROFESSIONAL ENGINEER, TO ALTER THIS DOCUMENT.


NVL08175F_R03
INTERSECTION OF
CHEYENNE AND MAVERICK
LAS VEGAS, NV 89108
PICO SMALL CELL

SHEET TITLE
GENERAL NOTES, LEGEND AND ABBREVIATIONS

SHEET NUMBER
GN-1 13

PART 1 – GENERAL

1.1 GENERAL CONDITIONS:

A. CONTRACTOR SHALL INSPECT THE EXISTING SITE CONDITIONS PRIOR TO SUBMITTING BID. ANY QUESTIONS ARISING DURING THE BID PERIOD IN REGARDS TO THE SUBCONTRACTORS FUNCTIONS, THE SCOPE OF WORK, OR ANY OTHER ISSUE RELATED TO THIS PROJECT SHALL BE BROUGHT UP DURING THE BID PERIOD WITH THE PROJECT MANAGER FOR CLARIFICATION, NOT AFTER THE CONTRACT HAS BEEN AWARDED.

B. THE SUBCONTRACTOR SHALL OBTAIN PERMITS, LICENSES, MAKE ALL DEPOSITS, AND PAY ALL FEES REQUIRED FOR THE CONSTRUCTION PERFORMANCE FOR THE WORK UNDER THIS SECTION.

C. DRAWINGS SHOW THE GENERAL ARRANGEMENT OF ALL SYSTEMS AND COMPONENTS COVERED UNDER THIS SECTION. THE SUBCONTRACTOR SHALL VERIFY ALL DIMENSIONS. DRAWING SHALL NOT BE SCALED TO DETERMINE DIMENSIONS.

1.2 LAWS, REGULATIONS, ORDINANCES, STATUTES AND CODES.

A. ALL WORK SHALL BE INSTALLED IN ACCORDANCE WITH THE 2013 EDITION OF THE CALIFORNIA ELECTRICAL CODE, AND ALL APPLICABLE LOCAL LAWS, REGULATIONS, ORDINANCES, STATUTES AND CODES. CONDUIT BENDS SHALL BE THE RADIUS BEND FOR THE TRADE SIZE OF CONDUIT IN COMPLIANCE WITH THE 2013 EDITION OF CEC.

1.3 REFERENCES:

A. THE PUBLICATIONS LISTED BELOW ARE PART OF THIS SPECIFICATION. EACH PUBLICATION SHALL BE THE LATEST REVISION AND ADDENDUM IN EFFECT ON THE DATE. THIS SPECIFICATION IS ISSUED FOR CONSTRUCTION UNLESS OTHERWISE NOTED. EXCEPT AS MODIFIED BY THE REQUIREMENT SPECIFIED HEREIN OR THE DETAILS OF THE DRAWINGS, WORK INCLUDED IN THIS SPECIFICATION SHALL CONFORM TO THE APPLICABLE PROVISION OF THESE PUBLICATIONS.

1. ANSI/IEEE (AMERICAN NATIONAL STANDARDS INSTITUTE)
2. ASTM (AMERICAN SOCIETY FOR TESTING AND MATERIALS)
3. ICE (INSULATED CABLE ENGINEERS ASSOCIATION)
4. NEMA (NATIONAL ELECTRICAL MANUFACTURER'S ASSOCIATION)
5. NFPA (NATIONAL FIRE PROTECTION ASSOCIATION)
6. OSHA (OCCUPATIONAL SAFETY AND HEALTH ADMINISTRATION)
7. UL (UNDERWRITERS LABORATORIES. INC.)
8. AT&T GROUNDING AND BONDING STANDARDS TP–76416

1.4 SCOPE OF WORK:

A. WORK UNDER THIS SECTION SHALL CONSIST OF FURNISHING ALL LABOR, MATERIAL, AND ASSOCIATED SERVICES REQUIRED TO COMPLETE REQUIRED CONSTRUCTION AND BE OPERATIONAL.

B. ALL ELECTRICAL EQUIPMENT UNDER THIS CONTRACT SHALL BE PROPERLY TESTED, ADJUSTED, AND ALIGNED BY THE SUBCONTRACTOR

C. THE SUBCONTRACTOR SHALL BE RESPONSIBLE FOR ALL EXCAVATING, DRAINING, TRENCHES, BACKFILLING, AND REMOVAL OF EXCESS DIRT.

D. THE SUBCONTRACTOR SHALL FURNISH TO THE OWNER WITH CERTIFICATES OF A FINAL INSPECTION AND APPROVAL FROM THE INSPECTION AUTHORITIES HAVING JURISDICTION.

E. THE SUBCONTRACTOR SHALL PREPARE A COMPLETE SET OF AS–BUILT DRAWINGS, DOCUMENT ALL WIRING EQUIPMENT CONDITIONS, AND CHANGES WHILE COMPLETING THIS CONTRACT. THE AS–BUILT DRAWINGS SHALL BE SUBMITTED AT COMPLETION OF THE PROJECT.

PART 2 – PRODUCTS

2.1 GENERAL:

A. ALL MATERIALS AND EQUIPMENT SHALL BE UL LISTED, NEW, AND FREE FROM DEFECTS.

B. ALL ITEMS OF MATERIALS AND EQUIPMENT SHALL BE ACCEPTABLE TO THE AUTHORITY HAVING JURISDICTION AS SUITABLE FOR THE USE INTENDED.

C. ALL EQUIPMENT SHALL BEAR THE UNDERWRITERS LABORATORIES LABEL OF APPROVAL, AND SHALL CONFORM TO REQUIREMENT OF THE CALIFORNIA ELECTRICAL CODE.

D. ALL OVERCURRENT DEVICES SHALL HAVE AN INTERRUPTING CURRENT RATING EQUAL TO OR GREATER THAN THE SHORT CIRCUIT CURRENT TO WHICH THEY ARE SUBJECTED. 10,000 AIC MINIMUM. VERIFY AVAILABLE SHORT CIRCUIT CURRENT DOES NOT EXCEED THE RATING OF ELECTRICAL EQUIPMENT.

2.2 MATERIALS AND EQUIPMENT:

A. CONDUIT:

1. RIGID METAL CONDUIT (RMC) SHALL BE HOT–DIPPED GALVANIZED INSIDE AND OUTSIDE INCLUDING ENDS AND THREADS AND ENAMELED OR LACQUERED INSIDE IN ADDITION TO GALVANIZING.

2. LIQUIDTIGHT FLEXIBLE METAL CONDUIT SHALL BE UL LISTED.

3. CONDUIT CLAMPS, STRAPS AND SUPPORTS SHALL BE STEEL OR MALLEABLE IRON. ALL FITTINGS SHALL BE COMPRESSION AND CONCRETE TIGHT TYPE. GROUNDING BUSHINGS WITH INSULATED THROATS SHALL BE INSTALLED ON ALL CONDUIT TERMINATIONS.

4. NONMETALLIC CONDUIT AND FITTINGS SHALL BE SCHEDULE 40 PVC. INSTALL USING SOLVENT–CEMENT–TYPE JOINTS AS RECOMMENDED BY THE MANUFACTURER.

B. CONDUCTORS AND CABLE:

1. CONDUCTORS AND CABLE SHALL BE FLAME–RETARDANT, MOISTURE AND HEAT RESISTANT THERMOPLASTIC, SINGLE CONDUCTOR, COPPER, TYPE THHN/THWN–2, 600 VOLT, SIZE AS INDICATED, #12 AWG SHALL BE THE MINIMUM SIZE CONDUCTOR USED.

2. #10 AWG AND SMALLER CONDUCTOR SHALL BE SOLID OR STRANDED AND #8 AWG AND LARGER CONDUCTORS SHALL BE STRANDED.

3. SOLDERLESS, COMPRESSION–TYPE CONNECTORS SHALL BE USED FOR TERMINATION OF ALL STRANDED CONDUCTORS.

4. STRAIN–RELIEF SUPPORTS GRIPS SHALL BE HUBBELL KELLEMS OR APPROVED EQUAL. CABLES SHALL BE SUPPORTED IN ACCORDANCE WITH THE NEC AND CABLE MANUFACTURER'S RECOMMENDATIONS.

5. ALL CONDUCTORS SHALL BE TAGGED AT BOTH ENDS OF THE CONDUCTOR, AT ALL PULL BOXES, J–BOXES, EQUIPMENT AND CABINETS AND SHALL BE IDENTIFIED WITH APPROVED PLASTIC TAGS (ACTION CRAFT, BRADY, OR APPROVED EQUAL).

C. DISCONNECT SWITCHES:

1. DISCONNECT SWITCHES SHALL BE HEAVY DUTY, DEAD–FRONT, QUICK–MAKE, QUICK–BREAK, EXTERNALLY OPERABLE, HANDLE LOCKABLE AND INTERLOCK WITH COVER IN CLOSED POSITION, RATING AS INDICATED, UL LABELED FURNISHED IN NEMA 3R ENCLOSURE, SQUARE–D OR ENGINEERED APPROVED EQUAL.

D. CHEMICAL ELECTROLYTIC GROUNDING SYSTEM:

1. INSTALL CHEMICAL GROUNDING AS REQUIRED. THE SYSTEM SHALL BE ELECTROLYTIC MAINTENANCE FREE ELECTRODE CONSISTING OF RODS WITH A MINIMUM #2 AWG CU EXOTHERMALLY WELDED PIGTAIL, PROTECTIVE BOXES, AND BACKFILL MATERIAL. MANUFACTURER SHALL BE LYNCOLE XIT GROUNDING ROD TYPES K2–(*)CS OR K2L–(*)CS. (*) 10' OR 20' AS AVAILABLE FROM MANUFACTURER, BUT NOT LESS THAN 8' MIN [REQUIRED PER CEC 250.52 A (5)].

2. GROUND ACCESS BOX SHALL BE A POLYPLASTIC BOX FOR NON–TRAFFIC APPLICATIONS, INCLUDING BOLT DOWN FLUSH COVER WITH "BREATHER" HOLES, XIT MODEL #XB–22. ALL DISCONNECT SWITCHES AND CONTROLLING DEVICES SHALL BE PROVIDED WITH ENGRAVED LAMICOID NAMEPLATES INDICATING EQUIPMENT CONTROLLED, BRANCH CIRCUITS ID NUMBERING, AND THE ELECTRICAL POWER SOURCE.

3. BACKFILL MATERIAL SHALL BE LYNCONITE AND LYNCOLE GROUNDING GRAVEL.

E. SYSTEM GROUNDING:

1. ALL GROUNDING COMPONENTS SHALL BE TINNED AND GROUNDING CONDUCTOR SHALL BE #2 AWG BARE, SOLID, TINNED, COPPER. ABOVE GRADE GROUNDING CONDUCTORS SHALL BE INSULATED WHERE NOTED.

2. GROUNDING BUSES SHALL BE BARE, TINNED, ANNEALED COPPER BARS OF RECTANGULAR CROSS SECTION. STANDARD BUS BARS MGB, SHALL BE FURNISHED AND INSTALLED BY THE SUBCONTRACTOR. THEY SHALL NOT BE FABRICATED OR MODIFIED IN THE FIELD. ALL GROUNDING BUSES SHALL BE IDENTIFIED WITH MINIMUM 3/4" LETTERS BY WAY OF STENCILING OR DESIGNATION PLATE.

3. CONNECTORS SHALL BE HIGH–CONDUCTIVITY, HEAVY DUTY, LISTED AND LABELED AS GROUNDING CONNECTORS FOR THE MATERIALS USED. USE TWO–HOLE COMPRESSION LUGS WITH HEAT SHRINK FOR MECHANICAL CONNECTIONS. INTERIOR CONNECTIONS USE TWO–HOLE COMPRESSION LUGS WITH INSPECTION WINDOW AND CLEAR HEAT SHRINK.

4. EXOTHERMIC WELDED CONNECTIONS SHALL BE PROVIDED IN KIT FORM AND SELECTED FOR THE SPECIFIC TYPES, SIZES, AND COMBINATIONS OF CONDUCTORS AND OTHER ITEMS TO BE CONNECTED.

5. GROUND RODS SHALL BE COPPER–CLAD STEEL WITH HIGH–STRENGTH STEEL CORE AND ELECTROLYTIC–GRADE COPPER OUTER SHEATH, MOLTEN WELDED TO CORE, 5/8"x10'–0". ALL GROUNDING RODS SHALL BE INSTALLED WITH INSPECTION SLEEVES.

6. INSTALL AN EQUIPMENT GROUNDING CONDUCTOR IN ALL CONDUITS IN COMPLIANCE WITH THE AT&T SPECIFICATIONS AND CEC. THE EQUIPMENT GROUNDING CONDUCTORS SHALL BE BONDED AT ALL JUNCTION BOXES, PULLBOXES, DISCONNECT SWITCHES, STARTERS, AND EQUIPMENT CABINETS.

F. OTHER MATERIALS:

1. THE SUBCONTRACTOR SHALL PROVIDE OTHER MATERIALS, THOUGH NOT SPECIFICALLY DESCRIBED, WHICH ARE REQUIRED FOR A COMPLETELY OPERATIONAL SYSTEM AND PROPER INSTALLATION OF THE WORK.

2. PROVIDE PULL BOXES AND JUNCTION BOXES WHERE SHOWN OR REQUIRED BY CEC.

G. PANELS AND LOAD CENTERS:

1. ALL PANEL DIRECTORIES SHALL BE TYPEWRITTEN.

PART 3 – EXECUTION

3.1 GENERAL:

A. ALL MATERIAL AND EQUIPMENT SHALL BE INSTALLED IN STRICT ACCORDANCE WITH THE MANUFACTURER'S RECOMMENDATIONS AND AS SHOWN ON DSA APPROVED DWG'S.

B. EQUIPMENT SHALL BE TIGHTLY COVERED AND PROTECTED AGAINST DIRT OR WATER, AND AGAINST CHEMICAL OR MECHANICAL INJURY DURING INSTALLATION AND CONSTRUCTION PERIODS.

3.2 LABOR AND WORKMANSHIP:

A. ALL LABOR FOR THE INSTALLATION OF MATERIALS AND EQUIPMENT FURNISHED FOR THE ELECTRICAL SYSTEM SHALL BE INSTALLED BY EXPERIENCED WIREMEN, IN A NEAT AND WORKMAN–LIKE MANNER.

B. ALL ELECTRICAL EQUIPMENT SHALL BE ADJUSTED, ALIGNED AND TESTED BY THE SUBCONTRACTOR AS REQUIRED TO PRODUCE THE INTENDED PERFORMANCE.

C. UPON COMPLETION OF WORK, THE SUBCONTRACTOR SHALL THOROUGHLY CLEAN ALL EXPOSED EQUIPMENT, REMOVE ALL LABELS AND ANY DEBRIS, CRATING OR CARTONS AND LEAVE THE INSTALLATION FINISHED AND READY FOR OPERATION.

3.3 COORDINATION:

A. THE SUBCONTRACTOR SHALL COORDINATE THE INSTALLATION OF ELECTRICAL ITEMS WITH THE OWNER–FURNISHED EQUIPMENT DELIVERY SCHEDULE TO PREVENT UNNECESSARY DELAYS IN THE TOTAL WORK.

3.4 INSTALLATION:

A. CONDUIT:

1. ALL ELECTRICAL WIRING SHALL BE INSTALLED IN CONDUIT AS SPECIFIED. NO CONDUIT OR TUBING OF LESS THAN 3/4 INCH TRADE SIZE.

2. PROVIDE RIGID PVC SCHEDULE 80 CONDUITS FOR ALL RISERS, RMC OTHERWISE NOTED. EMT MAY BE INSTALLED FOR EXTERIOR CONDUITS WHERE NOT SUBJECT TO PHYSICAL DAMAGE.

3. THE INSTALLATION OF SCHEDULE 40 PVC AND RMC CONDUITS SHALL BE 24 INCHES MINIMUM DEPTH. ALL 90 DEGREE BENDS SHALL BE RMC. EXPANSION JOINTS ARE REQUIRED ON ALL CONDUIT RISERS.

4. USE GALVANIZED FLEXIBLE STEEL CONDUIT WHERE DIRECT CONNECTION TO EQUIPMENT WITH MOVEMENT, VIBRATION, OR FOR EASE OF MAINTENANCE. USE LIQUID TIGHT, FLEXIBLE METAL CONDUIT FOR OUTDOOR APPLICATIONS. INSTALL GALVANIZED FLEXIBLE STEEL CONDUIT AT ALL POINTS OF CONNECTION TO EQUIPMENT MOUNTED ON SUPPORT TO ALLOW FOR EXPANSION AND CONTRACTION.

5. A RUN OF CONDUIT BETWEEN BOXES OR EQUIPMENT SHALL NOT CONTAIN MORE THAN THE EQUIVALENT OF THREE QUARTER–BENDS. CONDUIT BEND SHALL BE MADE WITH THE UL LISTED BENDER OR FACTORY 90 DEGREE ELBOWS MAY BE USED.

6. FIELD FABRICATED CONDUITS SHALL BE CUT SQUARE WITH A CONDUIT CUTTING TOOL AND REAMED TO PROVIDE A SMOOTH INSIDE SURFACE.

7. PROVIDE INSULATED GROUNDING BUSHING FOR ALL CONDUITS.

8. SUBCONTRACTOR IS RESPONSIBLE FOR PROTECTING ALL CONDUITS DURING CONSTRUCTION. TEMPORARY OPENINGS IN THE CONDUIT SYSTEM SHALL BE PLUGGED OR CAPPED TO PREVENT ENTRANCE OF MOISTURE OR FOREIGN MATTER. SUBCONTRACTOR SHALL REPLACE ANY CONDUITS CONTAINING FOREIGN MATERIALS THAT CANNOT BE REMOVED.

9. ALL CONDUITS SHALL BE SWABBED CLEAN BY PULLING AN APPROPRIATE SIZE MANDREL THROUGH THE CONDUIT BEFORE INSTALLATION OF CONDUCTORS OR CABLES. CONDUIT SHALL BE FREE OF DIRT AND DEBRIS.

10. INSTALL PULL STRINGS IN ALL CLEAN EMPTY CONDUITS. IDENTIFY PULL STRINGS AT EACH END.

11. INSTALL 2" HIGHLY VISIBLE AND DETECTABLE TAPE 12" ABOVE ALL UNDERGROUND CONDUITS AND CONDUCTORS.

12. CONDUITS SHALL BE INSTALLED IN SUCH A MANNER AS TO INSURE AGAINST COLLECTION OF TRAPPED CONDENSATION.

13. PROVIDE CORE DRILLING AS NECESSARY FOR PENETRATIONS TO ALLOW FOR RACEWAYS AND CABLES TO BE ROUTED THROUGH THE BUILDING. DO NOT PENETRATE STRUCTURAL MEMBERS UNLESS SPECIFICALLY SHOWN ON DSA APPROVED DWG'S. ANY CORING/CUTTING REQUIRED TO COMPLETE THE WORK, BUT NOT SHOWN ON DSA APPROVED DWG'S SHALL BE SUBJECT TO DSA REVIEW AND APPROVAL PRIOR TO BEGINNING ON SUCH WORK. SLEEVES AND/OR PENETRATION SHALL BE EFFECTIVELY SEALED WITH FIRE RATED MATERIAL WHICH SHALL MAINTAIN THE FIRE RATING OF THE WALL OR STRUCTURE. FIRE STOPS AT FLOOR PENETRATIONS SHALL PREVENT PASSAGE OF WATER, SMOKE, FIRE, AND FUMES. ALL MATERIAL SHALL BE UL APPROVED FOR THIS PURPOSE.

B. CONDUCTORS AND CABLE:

1. ALL POWER WIRING SHALL BE COLOR CODED AS FOLLOWS:

| DESCRIPTION | 208/240/120 VOLT SYSTEMS |
|---|---|
| PHASE A | BLACK |
| PHASE B | RED |
| PHASE C | BLUE |
| NEUTRAL | WHITE |
| GROUNDING | GREEN |

2. SPLICES SHALL BE MADE ONLY AT OUTLETS, JUNCTION BOXES, OR ACCESSIBLE RACEWAY CONDULETS APPROVED FOR THIS PURPOSE.

3. PULLING LUBRICANTS SHALL BE UL APPROVED. SUBCONTRACTOR SHALL USE NYLON OR HEMP ROPE FOR PULLING CONDUCTOR OR CABLES INTO THE CONDUIT.

4. CABLES SHALL BE NEATLY TRAINED, WITHOUT INTERLACING, AND BE OF SUFFICIENT LENGTH IN ALL BOXES & EQUIPMENT TO PERMIT MAKING A NEAT ARRANGEMENT. CABLES SHALL BE SECURED IN A MANNER TO AVOID TENSION ON CONDUCTORS OR TERMINALS. CONDUCTORS SHALL BE PROTECTED FROM MECHANICAL INJURY AND MOISTURE. SHARP BENDS OVER CONDUIT BUSHINGS IS PROHIBITED. DAMAGED CABLES SHALL BE REMOVED AND REPLACED AT THE SUBCONTRACTOR'S EXPENSE.

C. DISCONNECT SWITCHES:

1. INSTALL DISCONNECT SWITCHES LEVEL AND PLUMB. CONNECT TO WIRING SYSTEM AND GROUNDING SYSTEM AS INDICATED.

D. GROUNDING:

1. ALL METALLIC PARTS OF ELECTRICAL EQUIPMENT WHICH DO NOT CARRY CURRENT SHALL BE GROUNDED IN ACCORDANCE WITH THE REQUIREMENTS OF THE BUILDING MANUFACTURER, AT&T GROUNDING AND BONDING STANDARDS TP–76416, ND–00135, AND THE CALIFORNIA ELECTRICAL CODE (2013 CEC EDITION).

2. PROVIDE ELECTRICAL GROUNDING AND BONDING SYSTEM INDICATED WITH ASSEMBLY OF MATERIALS, INCLUDING GROUNDING ELECTRODES, BONDING JUMPERS AND ADDITIONAL ACCESSORIES AS REQUIRED FOR A COMPLETE INSTALLATION.

3. ALL GROUNDING CONDUCTORS SHALL PROVIDE A STRAIGHT DOWNWARD PATH TO GROUND WITH GRADUAL BEND AS REQUIRED. GROUNDING CONDUCTORS SHALL NOT BE LOOPED OR SHARPLY BENT. ROUTE GROUNDING CONNECTIONS AND CONDUCTORS TO GROUND IN THE SHORTEST AND STRAIGHTEST PATHS POSSIBLE TO MINIMIZE TRANSIENT VOLTAGE RISES.

4. BUILDINGS AND/OR NEW TOWERS GREATER THAN 75 FEET IN HEIGHT AND WHERE THE MAIN GROUNDING CONDUCTORS ARE REQUIRED TO BE ROUTED TO GRADE, THE SUBCONTRACTOR SHALL ROUTE TWO GROUNDING CONDUCTORS FROM THE ROOFTOP, TOWERS, AND WATER TOWERS GROUNDING RING, TO THE EXISTING GROUNDING SYSTEM, THE GROUNDING CONDUCTORS SHALL NOT BE SMALLER THAN 2/0 AWG COPPER. ROOFTOP GROUNDING RING SHALL BE BONDED TO THE EXISTING GROUNDING SYSTEM, THE BUILDING STEEL COLUMNS, LIGHTNING PROTECTION SYSTEM, AND BUILDING MAIN WATER LINE (FERROUS OR NONFERROUS METAL PIPING ONLY). SEE STANDARD 6.3.2.2.

5. TIGHTEN GROUNDING AND BONDING CONNECTORS, INCLUDING SCREWS AND BOLTS, IN ACCORDANCE WITH MANUFACTURER'S PUBLISHED TORQUE TIGHTENING VALUES FOR CONNECTORS AND BOLTS. WHERE MANUFACTURER'S TORQUING REQUIREMENTS ARE NOT AVAILABLE, TIGHTEN CONNECTIONS TO COMPLY WITH TIGHTENING TORQUE VALUES SPECIFIED IN UL TO ASSURE PERMANENT AND EFFECTIVE GROUNDING.

6. SUBCONTRACTOR SHALL VERIFY THE LOCATIONS OF GROUNDING TIE–IN–POINTS TO THE EXISTING GROUNDING SYSTEM. ALL UNDERGROUND GROUNDING CONNECTIONS SHALL BE MADE BY THE EXOTHERMIC WELD PROCESS AND INSTALLED IN ACCORDANCE WITH THE MANUFACTURER'S INSTRUCTIONS.

7. ALL GROUNDING CONNECTIONS SHALL BE INSPECTED FOR TIGHTNESS. EXOTHERMIC WELDED CONNECTIONS SHALL BE APPROVED BY THE INSPECTOR HAVING JURISDICTION BEFORE BEING PERMANENTLY CONCEALED.

8. APPLY CORROSION–RESISTANCE FINISH TO FIELD CONNECTIONS AND PLACES WHERE FACTORY APPLIED PROTECTIVE COATINGS HAVE BEEN DESTROYED. USE KOPR–SHIELD ANTI–OXIDATION COMPOUND ON ALL COMPRESSION GROUNDING CONNECTIONS.

9. A SEPARATE, CONTINUOUS, INSULATED EQUIPMENT GROUNDING CONDUCTOR SHALL BE INSTALLED IN ALL FEEDER AND BRANCH CIRCUITS.

10. BOND ALL INSULATED GROUNDING BUSHINGS WITH A BARE 6 AWG GROUNDING CONDUCTOR TO A GROUND BUS.

11. DIRECT BURIED GROUNDING CONDUCTORS SHALL BE INSTALLED AT A NOMINAL DEPTH OF 36" MINIMUM BELOW GRADE, OR 6" BELOW THE FROST LINE, USE THE GREATER OF THE TWO DISTANCES.

12. ALL GROUNDING CONDUCTORS EMBEDDED IN OR PENETRATING CONCRETE SHALL BE INSTALLED IN SCHEDULE 40 PVC CONDUIT.

13. THE INSTALLATION OF CHEMICAL ELECTROLYTIC GROUNDING SYSTEM IN STRICT ACCORDANCE WITH MANUFACTURER'S INSTRUCTIONS. REMOVE SEALING TAPE FROM LEACHING AND BREATHER HOLES. INSTALL PROTECTIVE BOX FLUSH WITH GRADE.

14. DRIVE GROUND RODS UNTIL TOPS ARE A MINIMUM DISTANCE OF 36" DEPTH OR 6" BELOW FROST LINE, USING THE GREATER OF THE TWO DISTANCES.

15. IF COAX ON THE ICE BRIDGE IS MORE THAN 6 FT. FROM THE GROUNDING BAR AT THE BASE OF THE TOWER, A SECOND GROUNDING BAR WILL BE NEEDED AT THE END OF THE ICE BRIDGE, TO GROUND THE COAX CABLE GROUNDING KITS AND IN–LINE ARRESTORS

16. SUBCONTRACTOR SHALL REPAIR, AND/OR REPLACE, EXISTING GROUNDING SYSTEM COMPONENTS DAMAGED DURING CONSTRUCTION AT THE SUBCONTRACTORS EXPENSE.

3.5 ACCEPTANCE TESTING:

A. CERTIFIED PERSONNEL USING CERTIFIED EQUIPMENT SHALL PERFORM REQUIRED TESTS AND SUBMIT WRITTEN TEST REPORTS UPON COMPLETION.

B. WHEN MATERIAL AND/OR WORKMANSHIP IS FOUND NOT TO COMPLY WITH THE SPECIFIED REQUIREMENTS, THE NON–COMPLYING ITEMS SHALL BE REMOVED FROM THE PROJECT SITE AND REPLACED WITH ITEMS COMPLYING WITH THE SPECIFIED REQUIREMENTS PROMPTLY AFTER RECEIPT OF NOTICE FOR NON–COMPLIANCE.

C. TEST PROCEDURES;

1. ALL FEEDERS SHALL HAVE INSULATION TESTED AFTER INSTALLATION, BEFORE CONNECTION TO DEVICES. THE CONDUCTORS SHALL TEST FREE FROM SHORT CIRCUITS AND GROUNDS. TESTING SHALL BE FOR ONE MINUTE USING 1000V DC. PROVIDE WRITTEN DOCUMENTATION FOR ALL TEST RESULTS.

2. PRIOR TO ENERGIZING CIRCUITRY, TEST WIRING DEVICES FOR ELECTRICAL CONTINUITY AND PROPER POLARITY CONNECTIONS.

3. MEASURE AND RECORD VOLTAGES BETWEEN PHASES AND BETWEEN PHASE CONDUCTORS AND NEUTRALS. SUBMIT A REPORT OF MAXIMUM AND MINIMUM VOLTAGES

4. PERFORM GROUNDING TEST TO MEASURE GROUNDING RESISTANCE OF GROUNDING SYSTEM USING THE IEEE STANDARD 3–POINT "FALL–OF–POTENTIAL" METHOD. PROVIDE PLOTTED TEST VALUES AND LOCATION SKETCH. NOTIFY THE ENGINEER IMMEDIATELY IF MEASURED VALUE IS OVER 5 OHMS.

GENERAL ELECTRICAL NOTES


at&t

AT&T MOBILITY
10550 W. CHARLESTON
SUITE B
LAS VEGAS, NV 89135

BLACK & VEATCH

BLACK & VEATCH CORPORATION
8965 S EASTERN AVE
SUITE #325
LAS VEGAS, NV 89123


| | |
|---|---|
| PROJECT NO: | 129084.1501 |
| DRAWN BY: | TPG |
| CHECKED BY: | GAC |

| REV | DATE | DESCRIPTION |
|---|---|---|
| 1 | 05/23/19 | ISSUED FOR CONSTRUCTION |
| 0 | 04/01/19 | ISSUED FOR CONSTRUCTION |

IT IS A VIOLATION OF LAW FOR ANY PERSON, UNLESS THEY ARE ACTING UNDER THE DIRECTION OF A LICENSED PROFESSIONAL ENGINEER, TO ALTER THIS DOCUMENT.

NVL08175F_R03
INTERSECTION OF
CHEYENNE AND MAVERICK
LAS VEGAS, NV 89108
PICO SMALL CELL

SHEET TITLE

GENERAL NOTES

SHEET NUMBER

GN-2

## STRUCTURAL STEEL NOTES

1. DESIGN, FABRICATION, ERECTION, ALTERATION AND MAINTENANCE SHALL CONFORM TO THE FOLLOWING, UNLESS NOTED OTHERWISE (UNO).
   A. TIA–222: STRUCTURAL STANDARD FOR ANTENNA SUPPORTING STRUCTURES AND ANTENNAS
   B. TIA–1019–A: INSTALLATION, ALTERATION, AND MAINTENANCE OF ANTENNA SUPPORTING STRUCTURES AND ANTENNAS
   C. AISC: MANUAL OF STEEL CONSTRUCTION

2. ALL STRUCTURAL ELEMENTS SHALL CONFORM TO THE FOLLOWING REQUIREMENTS, UNO.
   A. STRUCTURAL STEEL, ASTM A572 GRADE 65 (FY = 65 KSI).
   B. ALL BOLTS, ASTM A325 TYPE 1 GALVANIZED HIGH STRENGTH BOLTS.
   C. ALL NUTS, ASTM A563 CARBON AND ALLOY STEEL NUTS.
   D. ALL WASHERS, ASTM F436 HARDENED STEEL WASHERS.

3. ALL HOLES SHALL BE CUT WITH A GRINDER OR DRILLED. HOLES SHALL NOT BE FLAME CUT THRU STEEL UNLESS APPROVED BY THE ENGINEER OF RECORD.

4. ALL FASTENERS SHALL NOT BE REUSED.

5. A NUT LOCKING DEVICE SHALL BE INSTALLED ON ALL PROPOSED AND/OR REPLACED ASTM A325 BOLTS.

6. ALL PROPOSED AND/OR REPLACED BOLTS SHALL BE OF SUFFICIENT LENGTH SUCH THAT THE END OF THE BOLT BE AT LEAST FLUSH WITH THE FACE OF THE NUT. IT IS NOT PERMITTED FOR THE BOLT END TO BE BELOW THE FACE OF THE NUT AFTER TIGHTENING IS COMPLETED.

7. HOT–DIP GALVANIZE ALL ITEMS, UNO.
   GALVANIZE PER ASTM A123, ASTM A153/A153M OR ASTM A653 G90, AS APPLICABLE.

8. AFTER FINAL INSPECTION, ALL EXPOSED STRUCTURAL STEEL AS THE RESULT OF THIS SCOPE OF WORK INCLUDING WELDS, FIELD DRILLED HOLES, AND SHAFT INTERIORS (WHERE ACCESSIBLE), SHALL BE CLEANED AND COLD GALVANIZING APPLIED BY BRUSH. PHOTO DOCUMENTATION IS REQUIRED TO BE SUBMITTED TO THE INSPECTOR.

## WELDING NOTES

1. ALL WELDING SHALL BE IN ACCORDANCE WITH THE AWS D1.1/D1.1M, "STRUCTURAL WELDING CODE–STEEL".

2. ALL WELDING SHALL BE PERFORMED BY AWS CERTIFIED WELDERS.

3. ALL ARC WELDING ON STRUCTURES SHALL BE DONE IN ACCORDANCE WITH AWS D1.1 (LATEST EDITION). THIS SHALL INCLUDE A CERTIFIED WELDING INSPECTOR (CWI) FOR ACCEPTANCE OR REJECTION OF ALL WELDING OPERATIONS, PRE–DURING–POST, USING THE ACCEPTANCE CRITERIA OF AWS D1.1. THE CWI SHALL WORK WITH THE GC ON THE LEVEL OF INTERACTION NEEDED TO CONDUCT THE WELDING INSPECTION. THE CERTIFIED WELDING INSPECTION IS THE RESPONSIBILITY OF THE GC.

4. FOR ALL WELDING, USE E80XX ELECTRODES FOR SMAW PROCESS AND E8XT–XX ELECTRODES FOR FCAW PROCESS, UNO.

5. SURFACES TO BE WELDED SHALL BE FREE FROM SCALE, SLAG, RUST, MOISTURE, GREASE OR ANY OTHER FOREIGN MATERIAL THAT WOULD PREVENT PROPER WELDING. GRIND THE SURFACE ADJACENT TO THE WELD FOR A DISTANCE OF 2" MINIMUM ALL AROUND. ENSURE BOTH AREAS ARE 100% FREE OF ALL GALVANIZING.

6. REPAIR THE GALVANIZED COATING. ALL AREAS AFFECTED BY THE FIELD DRILLING, FIELD GRINDING AND FIELD WELDING, BOTH INSIDE AND OUTSIDE THE MONOPOLE, SHALL BE REPAIRED. PRODUCTS TO BE APPLIED IN STRICT ACCORDANCE WITH MANUFACTURER'S RECOMMENDATIONS. AREAS THAT HAVE BEEN TOUCHED UP SHOULD BE INSPECTED AS PART OF THE ROUTINE MAINTENANCE OF THE STRUCTURE. NO SPRAY PAINT IS ALLOWED. AFTER ZINC–RICH PAINT IS DRY, OVERCOAT WITH OWNER'S PAINT SPECIFICATIONS, APPLIED IN STRICT ACCORDANCE WITH THE MANUFACTURER'S RECOMMENDATIONS.

7. DO NOT WELD IF THE TEMPERATURE OF THE STEEL IN THE VICINITY OF THE WELD AREA IS BELOW 0° F. WHEN THE TEMPERATURE IS BETWEEN 0° F AND 32° F, PREHEAT AND MAINTAIN THE STEEL IN THE VICINITY OF THE WELD AREA AT 70° F DURING THE WELDING PROCESS.

8. DO NOT WELD ON WET OR FROST–COVERED SURFACES & PROVIDE ADEQUATE PROTECTION FROM HIGH WINDS.

9. MOVE ALL COAX AND OTHER FLAMMABLE MATERIALS FROM ANY AREA THAT MAY BE HEATED DURING CONSTRUCTION.

10. CONTRACTOR SHALL MAKE PROPER PRECAUTIONS AND PROCEDURES TO PROTECT THE STRUCTURE FROM CATCHING FIRE DURING ALL WELDING OPERATIONS. THE FOLLOWING FIRE SAFETY PREVENTION PROTOCOL IS THE MINIMUM REQUIREMENTS DURING WELDING OPERATIONS.
    – 500 GALLON WATER TANK WITH PUMP TO BE ON SITE AT ALL TIMES.
    – 2 FIRE EXTINGUISHERS ON SITE AT ALL TIMES.
    – 2 MAN FIRE WATCH ON ANY ADJACENT STRUCTURES, FIELDS AND POLE.
    – INTERMITTENT COOLING OF WELDED SURFACE TO REDUCE HEAT IN STRUCTURE.

## STORMWATER BMP NOTES:

1. THE OWNER, SITE DEVELOPER, CONTRACTOR, AND/OR THEIR AUTHORIZED AGENTS SHALL EACH DAY REMOVE ALL SEDIMENT, MUD, CONSTRUCTION DEBRIS, OR OTHER POTENTIAL POLLUTANTS THAT MAY HAVE BEEN DISCHARGED TO, OR ACCUMULATED IN, THE PUBLIC RIGHTS OF WAY OF CLARK COUNTY AS A RESULT OF CONSTRUCTION ACTIVITIES ASSOCIATED WITH THIS SITE DEVELOPMENT OR CONSTRUCTION PROJECT. SUCH MATERIALS SHALL BE PREVENTED FROM ENTERING THE STORM SEWER SYSTEM.

2. ADDITIONAL CONSTRUCTION SITE DISCHARGE BEST MANAGEMENT PRACTICES MAY BE REQUIRED OF THE OWNER AND HIS OR HER AGENTS DUE TO UNFORESEEN EROSION PROBLEMS OR IF THE SUBMITTED PLAN DOES NOT MEET THE PERFORMANCE STANDARDS SPECIFIED IN THE LAS VEGAS VALLEY CONSTRUCTION SITE BMP GUIDANCE MANUAL.

3. AT A MINIMUM, THE CONTRACTOR OR HIS AGENT SHALL INSPECT ALL DISTURBED AREAS, AREAS USED FOR STORAGE OF MATERIALS AND EQUIPMENT THAT ARE EXPOSED TO PRECIPITATION, VEHICLE ENTRANCE AND EXIT LOCATIONS, AND ALL BMPS WEEKLY, AND WITHIN 24 HOURS AFTER ANY RAIN EVENT OF 0.5 INCHES OR MORE. THE CONTRACTOR OR HIS AGENT SHALL UPDATE OR MODIFY THE STORMWATER POLLUTION PREVENTION PLAN AS NECESSARY. SOME EXCEPTIONS TO WEEKLY INSPECTIONS MAY APPLY, SUCH AS SUSPENSION OF LAND DISTURBANCE ACTIVITIES. REFER TO THE NEVADA STORMWATER GENERAL PERMIT FOR CONSTRUCTION ACTIVITY NVR100000, SECTION III.A.12.

4. ACCUMULATED SEDIMENT IN BMPS SHALL BE REMOVED WITHIN SEVEN DAYS AFTER A STORMWATER RUNOFF EVENT OR PRIOR TO THE NEXT ANTICIPATED STORM EVENT, WHICHEVER IS EARLIER. SEDIMENT MUST BE REMOVED WHEN BMP DESIGN CAPACITY HAS BEEN REDUCED BY 50 PERCENT OR MORE.

5. BMP'S TO BE IMPLEMENTED INCLUDE BUT ARE NOT LIMITED TO:
   A. MINIMIZE DISTURBED AREA AND PROTECT NATURAL FEATURES AND SOIL
   B. CONTROLLING STORMWATER FLOWING ONTO AND THROUGH THE PROJECT VIA THE USE OF SEDIMENT BERMS AND STRAW WADDLES AS APPROPRIATE
   C. STABILIZING SOILS THROUGH SITE RESTORATION AT COMPLETION OF PROJECT
   D. PROTECTING STORM DRAIN INLETS VIA THE USE OF SAND BAGS, STRAW WADDLES AND FILTER FABRIC AS APPROPRIATE

6. BMP'S MUST BE IN PLACE WHEN SOILS ARE EXPOSED (NO WAITING PERIODS)

## PUBLIC WORKS DEVELOPMENT NOTES

1. STRUCTURAL DESIGN ACCEPTANCE FOR NEW FOUNDATION, IF APPLICABLE, IS VALID ONLY FOR POLE FOUNDATIONS INSTALLED ON LEVELED SURFACES. ANY FOUNDATION INSTALLED WITHIN (5FT) FROM A SLOPE WILL REQUIRE SLOPE STABILITY ANALYSIS AND CALCULATIONS WITH A SEPARATE STRUCTURAL REVIEW AND FEE. GEOTECHNICAL WILL BE NEEDED FOR THE REVIEW.

2. SIDEWALKS MUST BE UNOBSTRUCTED AND HAVE AN ACCESS OF AT LEAST 3.0–FT FROM BACK OF CURB.

## SPECIAL INSPECTIONS REQUIRED

PERFORM THIRD PARTY SPECIAL INSPECTION FOR (STREET LIGHT FOUNDATION...).SPECIAL INSPECTION IS REQUIRED.

1. INSPECTIONS SHALL BE PERFORMED BY AN ICC CERTIFIED INSPECTOR APPROVED BY CLARK COUNTY; EMPLOYED BY THE OWNER/DEVELOPER.

2. PROVIDE SPECIAL INSPECTIONS IN ACCORDANCE WITH THE 2018 INTERNATIONAL BUILDING CODE FOR THE ITEMS LISTED BELOW.
   A. MASONRY– PERIODIC
   B. REINFORCING STEEL PLACEMENT– PERIODIC
   C. GROUT–CONTINUOUS
   D. CONCRETE PLACEMENT–CONTINUOUS
   E. CONCRETE STRENGTH– CONTINUOUS
   F. EPOXY FASTENED DOWELS AND ANCHORS–PERIODIC
   G. .....

3. THE INSPECTOR SHALL SUBMIT A STATEMENT TO THE OWNER/DEVELOPER, AND STRUCTURAL ENGINEER INDICATING COMPLIANCE WITH THE PLANS AND SPECIFICATIONS.

4. SPECIAL INSPECTION OF THE FILL AROUND THE ((STREET LIGHT FOUNDATION...) SHALL BE PROVIDED AT A FREQUENCY AS NECESSARY TO ENSURE THAT PROPER FILL AND COMPACTION IS ACHIEVED. COMPACTION TEST FOR EACH LIFT SHALL BE TAKEN PER CCAUSD 203.05.02. THE SPECIAL INSPECTOR SHALL SUBMIT A COMPLIANCE REPORT TO THE OWNER/DEVELOPER


at&t

AT&T MOBILITY
10550 W. CHARLESTON
SUITE B
LAS VEGAS, NV 89135

BLACK & VEATCH

BLACK & VEATCH CORPORATION
8965 S EASTERN AVE
SUITE #325
LAS VEGAS, NV 89123


| | |
|---|---|
| PROJECT NO: | 129084.1501 |
| DRAWN BY: | TPG |
| CHECKED BY: | GAC |

| REV | DATE | DESCRIPTION |
|---|---|---|
| 2 | 07/22/19 | CITY COMMENTS |
| 1 | 05/23/19 | ISSUED FOR CONSTRUCTION |
| 0 | 04/01/19 | ISSUED FOR CONSTRUCTION |

IT IS A VIOLATION OF LAW FOR ANY PERSON, UNLESS THEY ARE ACTING UNDER THE DIRECTION OF A LICENSED PROFESSIONAL ENGINEER, TO ALTER THIS DOCUMENT.


NVL08175F_R03
INTERSECTION OF
CHEYENNE AND MAVERICK
LAS VEGAS, NV 89108
PICO SMALL CELL

SHEET TITLE

GENERAL NOTES

SHEET NUMBER

**GN-3** 15

# SMALL CELL SITE SURVEY
## SITE: CRAN_NVL08175F_R03
## NW¼NE¼ OF SECTION 14, TOWNSHIP 20 SOUTH, RANGE 60 EAST

| | |
|---|---|
| SITE #/PACE_NAME: | CRAN_NVL08175F_R03_LTE_1C_1900 |
| FA LOCATION CODE: | 14819928 |
| USID: | 208972 |

N

GRAPHIC SCALE

20 0 10 20

FEET

A *LATITUDE:* 36°13'02.54"N
*LONGITUDE:* 115°13'49.99"W
*GROUND ELEVATION:* 2281.39'
*NAVD '88*

### Legend

- MONUMENT
- POLE
- DOWN GUY
- GAS VALVE
- PEDASTAL
- LAMP POST
- WATER VALVE
- FIRE HYDRANT
- WATER MANHOLE
- WATER METER
- SEWER MANHOLE
- UNKNOWN OR LABELED MANHOLE
- SANITARY SEWER MANHOLE
- STORM WATER MANHOLE
- ELECTRIC MANHOLE
- TELECOM MANHOLE
- TREE
- FENCELINE
- ROW LINE
- CENTER LINE
- SEWER — S —
- TELEPHONE — T —
- WATER — W —
- ELECTRIC — E —
- GAS LINE — G —
- OVERHEAD ELEC
- FENCE BARB — X —
- PROPERTY LINE


at&t
12900 PARK PLAZA DRIVE,
CERRITOS, CA 90703

ENGINEERS:
BLACK & VEATCH
6 SUNSET WAY
SUITE B108
HENDERSON, NV 89014


| | |
|---|---|
| SITE NO: | CRAN_NVL08175F_R03 |
| DRAWN BY: | KJC |
| CHECKED BY: | CIS |

| REV | DATE | DESCRIPTION |
|---|---|---|
| A | 3/14/19 | PRELIMINARY SUBMITTAL |


SURVEYOR:
CIS
PROFESSIONAL LAND SURVEYING
435-660-0816


CIS JOB NO:
CIS 315-1-31-60

SHEET TITLE
SMALL CELL
SITE SURVEY

SHEET NUMBER
1 OF 1

16

TRAFFIC ENGINEERING
FIELD OPERATIONS
3001 RONEMUS DRIVE
LAS VEGAS, NV 89128
PHONE: (702) 229-6331

# CITY OF LAS VEGAS

## SMALL CELL SITE SURVEY

- *THIS FORM IDENTIFIES THE POTENITAL POWER SUPPLY SOURCE FOR A PROPOSED SMALL CELL SITE*
- *THIS ONLY REPRESENTS THE CONDITIONS AT TIME OF SITE SURVEY*
- *FIELD CONDITIONS MAY CHANGE FROM THE TIME OF THE SITE SURVEY UNTIL THE START OF CONSTRUCTION*

CONTRACTOR'S NAME: Overland Contracting/B&V

WIRELESS USE AGREEMENT: New Cingular Wireless

WIRELESS SERVICE PROVIDER & ID#: New Cingular Wireless ID # 25307 NVL08175F_R03

CONTACT NAME: Jason Frayer

OFFICE: 8965 South Eastern Avenue, Suite 325 LV. NV 89123

MOBILE: 702-460-8926

FAX: 702-434-3378

POLE LOCATION & ID: Cheyenne & Maverick ID# 125539

CIRCLE ONE : NEW POLE / **(EXISTING POLE)**

PROPOSED SERVICE INFORMATION

| | | | | | | | |
|---|---|---|---|---|---|---|---|
| Service Location | 6295 Atwood Ave | | | | | ID#401764 | |
| Existing Meter # | | | CC030098426 | | | | |
| Existing Service Size | | 60 Amp | | 100 Amp | | 125 Amp | 200 Amp |
| Street Light Circuit | | | | | | | |
| Service Type | | Pedestal | | | | Pole Mount | |
| Current Application | | Traffic Signal | | St. Lighting | | Both | |
| Existing Load | | | | | | Amps | |
| Field Tested By: | B Bradway | | | | | Date: | 1/16/19 |
| Additional Notes: No main disconnect. Upgrade Required | | | | | | | |

## CLV REPRESENTATIVE

- *TO BE COMPLETED BY TEFO STAFF*

CLV FIELD REVIEWER'S NAME: B Bradway

FIELD REVIEW DATE: 1/23/19 A Childers

SENIOR/SUPVERVISOR REVIEW SIGNATURE: 2/11/19

DATE REVIEWED BY SENIOR TECH:

Not suitable for use to serve small cell site without upgrade

## BACKUP DOCUMENTATION

- *DRAWINGS, PHOTOS, ETC*

FILE NAME: CREATION DATE:

FILE NAME: CREATION DATE:

FILE NAME: CREATION DATE:

Service Size CREATION DATE:

Revised Tuesday, April 18, 2017

17