GENERAL CONSTRUCTION NOTES

1. SUBMITTAL OF BID INDICATES CONTRACTOR IS COGNIZANT OF ALL JOB SITE CONDITIONS AND WORK TO BE PERFORMED UNDER THIS CONTRACT.
2. CONTRACTOR SHALL PERFORM ALL VERIFICATION OBSERVATION TESTS, AND EXAMINATION WORK PRIOR TO THE ORDERING OF THE ELECTRICAL EQUIPMENT AND THE ACTUAL CONSTRUCTION. CONTRACTOR SHALL ISSUE A WRITTEN NOTICE OF ALL FINDINGS TO THE ARCHITECT LISTING ALL MALFUNCTIONS, FAULTY EQUIPMENT AND DISCREPANCIES.
3. HEIGHTS SHALL BE VERIFIED WITH OWNER TO INSTALLATION.
4. THESE PLANS ARE DIAGRAMMATIC ONLY, FOLLOW AS CLOSELY AS POSSIBLE.
5. EACH CONDUCTOR OF EVERY SYSTEM SHALL BE PERMANENTLY TAGGED IN EACH PANELBOARD, PULLBOX, J–BOX, SWITCH BOX, ETC., IN COMPLIANCE WITH OCCUPATIONAL SAFETY AND HEALTH ACT (O.S.H.A.).
6. CONTRACTOR SHALL PROVIDE ALL LABOR, MATERIALS, INSURANCE, EQUIPMENT, INSTALLATION, CONSTRUCTION TOOLS, TRANSFORMATION, ETC., FOR A COMPLETE AND PROPERLY OPERATIVE SYSTEM ENERGIZED THROUGHOUT AND AS INDICATED ON DRAWINGS, AS SPECIFIED HEREIN AND/OR AS OTHERWISE REQUIRED.
7. ALL MATERIALS AND EQUIPMENT SHALL BE NEW AND IN PERFECT CONDITION WHEN INSTALLED AND SHALL BE OF THE BEST GRADE AND OF THE SAME MANUFACTURER THROUGHOUT FOR EACH CLASS OR GROUP OF EQUIPMENT, MATERIALS SHALL BE LISTED AND APPROVED BY UNDERWRITER'S LABORATORY AND SHALL BEAR THE INSPECTION LABEL "J" WHERE SUBJECT TO SUCH APPROVAL. MATERIALS SHALL MEET WITH APPROVAL OF THE DIVISION OF INDUSTRIAL SAFETY AND ALL GOVERNING BODIES HAVING JURISDICTION. MATERIALS SHALL BE MANUFACTURED IN ACCORDANCE WITH APPLICABLE STANDARDS ESTABLISHED BY ANSI, NEMA & NBFU.
8. CONTRACTOR SHALL CARRY OUT HIS WORK IN ACCORDANCE WITH ALL GOVERNING STATE, COUNTY AND LOCAL CODES AND O.S.H.A.
9. CONTRACTOR SHALL SECURE ALL NECESSARY BUILDING PERMITS.
10. COMPLETE JOB SHALL BE GUARANTEED FOR A PRIOR OF ONE (1) YEAR AFTER THE DATE OF JOB ACCEPTANCE BY OWNER. ANY WORK, MATERIAL OR EQUIPMENT FOUND TO BE FAULTY DURING THAT PERIOD SHALL BE CORRECTED AT ONCE, UPON WRITTEN NOTIFICATION, AT THE EXPENSE OF THE CONTRACTOR.
11. ALL CONDUIT ONLY (C.O.) SHALL HAVE A PULL WIRE OR ROPE.
12. PROVIDE PROJECT MANAGER WITH ONE SET OF COMPLETE ELECTRICAL "AS INSTALLED" DRAWINGS AT THE COMPLETION OF THE JOB, SHOWING ACTUAL DIMENSIONS, ROUTINGS, AND CIRCUITS.
13. ALL BROCHURES, OPERATING MANUALS, CATALOGS, SHOP DRAWINGS, ETC. SHALL BE TURNED OVER TO OWNER AT JOB COMPLETION.
14. USE T–TAP CONNECTIONS ON ALL MULTI –CIRCUITS WITH COMMON NEUTRAL CONDUCTOR FOR LIGHTING FIXTURE.
15. ALL CONDUCTORS SHALL BE COPPER.
16. ALL CIRCUIT BREAKERS, FUSES AND ELECTRICAL EQUIPMENT SHALL HAVE AN INTERRUPTING RATING NOT LESS THE MAXIMUM SHORT CIRCUIT CURRENT TO WHICH THEY MAY BE SUBJECTED, AND A MINIMUM OF 10,000 A.I.C.
17. THE ENTIRE ELECTRICAL INSTALLATION SHALL BE GROUNDED AS REQUIRED BY ALL APPLICABLE CODES AND DRAWINGS.
18. PATCH, REPAIR AND PAINT ANY AREA THAT HAS BEEN DAMAGED IN THE COURSE OF THE ELECTRICAL WORK.
19. IN DRILLING HOLES INTO CONCRETE WHETHER FOR FASTENING OR ANCHORING PURPOSES, OR PENETRATIONS THROUGH THE FLOOR FOR CONDUIT RUNS, PIPE RUNS, ETC., IT MUST BE CLEARLY UNDERSTOOD THAT TENDONS AND/OR REINFORCING STEEL WILL NOT BE DRILLED INTO, CUT OR DAMAGED UNDER ANY CIRCUMSTANCES.
20. LOCATION OF TENDONS AND/OR REINFORCING STEEL ARE NOT DEFINITELY KNOWN AND THEREFORE MUST BE SEARCHED FOR BY APPROPRIATE METHODS AND EQUIPMENT VIA X–RAY OR OTHER DEVICES THAT CAN ACCURATELY LOCATE THE REINFORCING AND/OR STEEL TENDONS.
21. WIRE AND CABLE CONDUCTORS SHALL BE COPPER #12 AWG MINIMUM, NO BX OR ROMEX CABLE IS PERMITTED UNLESS SPECIFICALLY NOTED OTHERWISE ON DRAWINGS.
22. GROUNDING CONDUCTORS SHALL BE SOLD TINED COPPER AND ANNEALED #2.
23. GROUND RODS SHALL BE COPPER CLAD STEEL, 5/8" ROUND AND 10' LONG. COPPERWELD OR APPROVED EQUAL.
24. METER SOCKET AMPERES, VOLTAGE, NUMBER OF PHASES SHALL BE AS NOTED ON THE DRAWINGS. MANUFACTURED BY SQUARE D COMPANY OR APPROVED EQUAL. ALL MATERIALS SHALL BE U.L. LISTED.
25. CONDUIT:
    - a. RIGID CONDUIT SHALL BE U.L. LABEL GALVANIZED ZINC COATED WITH INTERIOR AND SHALL BE USED WHEN INSTALLED IN OR UNDER CONCRETE SLABS, IN CONTACT WITH THE EARTH, UNDER PUBLIC ROADWAYS, IN MASONRY WALLS OR EXPOSED ON BUILDING EXTERIOR RIGIDCONDUIT IN CONTACT WITH EARTH SHALL BE 1/2 LAPPED WRAPPED WITH HUNTS WRAP PROCESS NO. 3.
    - b. ELECTRICAL METALLIC TUBING SHALL HAVE U.L. LABEL, FITTINGS SHALL BE GLAND RING COMPRESSION TYPE. EMT SHALL BE USED ONLY FOR INTERIOR RUNS.
    - c. FLEXIBLE METALLIC CONDUIT SHALL HAVE U.L. LISTED LABEL AND MAY BE USED WHERE PERMITTED BY CODE. FITTINGS SHALL BE "JAKE" OR "SQUEEZE" TYPE, SEAL TIGHT FLEXIBLE CONDUIT. ALL CONDUIT IN EXCESS OF SIX FEET IN LENGTH SHALL HAVE FULL SIZE GROUND WIRE.
    - d. ALL UNDERGROUND CONDUIT SHALL BE PVC SCHEDULE 40 (UNLESS NOTED OTHERWISE) AT A MINIMUM DEPTH OF 24" BELOW GRADE.
26. ALL ELECTRICAL EQUIPMENT SHALL BE LABELED WITH PERMANENT ENGRAVED PLASTIC LABELS.
27. UPON COMPLETION OF WORK, CONDUCT CONTINUITY, SHORT CIRCUIT, AND FALL POTENTIAL GROUNDING TESTS FOR APPROVAL. SUBMIT TEST REPORTS TO PROJECT MANAGER. CLEAN PREMISES OF ALL DEBRIS RESULTING FROM WORK AND LEAVE WORK IN A COMPLETE AND UNDAMAGED CONDITION.
28. CONTRACTOR TO COORDINATE WITH UTILITY COMPANY FOR CONNECTION OF TEMPORARY AND PERMANENT POWER TO THE SITE. THE TEMPORARY POWER AND ALL HOOKUP COSTS TO BE PAID BY CONTRACTOR.
29. THE ELECTRICAL INSTALLATION WORK SHALL COMPLY WITH ALL LOCAL, STATE AND NATIONAL CODES, LAWS AND ORDINANCES APPLICABLE TO ELECTRICAL WORK.
30. ELECTRICAL CONTRACTOR SHALL VISIT JOB SITE AND VERIFY EXISTING CONDITIONS BEFORE BIDDING AND SHALL INCLUDE IN HIS BID THE NECESSARY COSTS TO CONSTRUCT THIS PROJECT IN ACCORDANCE WITH INTENT OF THE ELECTRICAL DRAWINGS, SPECIFICATIONS, AND ALL APPLICABLE CODES.
31. ALL MATERIAL AND EQUIPMENT FURNISHED AND INSTALLED UNDER THIS CONTRACT SHALL BE NEW, FREE FORM DEFECTS AND SHALL BE GUARANTEED FOR A PERIOD OF ONE YEAR FROM DATE OF FINAL ACCEPTANCE BY OWNER OR HIS REPRESENTATIVE. SHOULD ANY TROUBLE DEVELOP DURING THIS PERIOD DUE TO FAULTY WORKMANSHIP, MATERIAL OR EQUIPMENT, THE CONTRACTOR SHALL FURNISH ALL NECESSARY MATERIAL AND LABOR TO CORRECT THE TROUBLE WITHOUT COST TO THE OWNER.
32. ALL WORK TO BE EXECUTED IN WORKMANLIKE MANNER AND SHALL PRESENT A NEAT MECHANICAL APPEARANCE WHEN COMPLETED.
33. ALL ELECTRICAL MATERIALS AND EQUIPMENT SHALL BE LISTED BY UNDERWRITER'S LABORATORIES.
34. ELECTRICAL CONTRACTOR SHALL BE RESPONSIBLE FOR ALL CUTTING AND PATCHING RELATED TO ELECTRICAL WORK, UNLESS NOTED OTHERWISE AND CO–ORDIANTED WITH THE GENERAL CONTRACTOR.
35. ELECTRICAL CONTRACTOR SHALL CO–ORINATE ALL WORK WITH CIVIL AND ARCHITECTURAL PLANS. THE REQUIREMENTS OF ALL EQUIPMENT ACTUALLY BEING INSTALLED SHALL BE VERIFIED PRIOR TO INSTALLING THE ELECTRICAL WORK.
36. ALL BRANCH CIRCUIT CONDUCTORS SHALL BE COPPER TYPE THWN–2, THW–2, RHW–2, XHHW–2 #14, #12, & #10 SOLID, #8 AND LARGER STRANDED, UNLESS NOTED OTHERWISE.
37. ON COMPLETION OF THE WORK, THE INSTALLATION SHALL BE FREE FORM GROUNDS AND SHORT CIRCUITS.
38. ELECTRICAL CONTRACTOR SHALL FURNISH AS–BUILT DRAWINGS TO THE ARCHITECT AND CUSTOMER UPON COMPLETION OF THE JOB.
39. ELECTRICAL WORK SHALL INCLUDE ALL LABOR, MATERIALS AND EQUIPMENT REQUIRED, INCLUDING BUT NOT LIMITED, TO COMPLETE ELECTRICAL SYSTEMS POWER AND LIGHTING, TELEPHONE CONDUIT SYSTEM, SIGNAL SYSTEMS, PANEL BOARDS(S), CONTROL WIRING, GROUNDING, CONDUIT ONLY SYSTEMS, ETC., AS INDICATED ON ELECTRICAL DRAWINGS AND/OR REQUIRED BY GOVERNING CODES.
40. RACEWAYS SHALL BE: RIGID STEEL CONDUIT: HOT–DIP GALVANIZED HEAVY WALL AS MANUFACTURED BY REPUBLIC, TRIANGLE OR EQUAL, RIGID POLYVINYL CHLORIDE CONDUIT (PVC): HEAVY WALLS SCHEDULE 40 AS MANUFACTURED BY CARLON ELECTRICAL, VISQEEN OR EQUAL, ELECTRICAL METALLIC TUBING (EMT):ZINC–COATED THIN WALL AS MANUFACTURED BY TRIANGLE, REPUBLIC OR EQUAL
41. FUSE TYPE SHALL BE BUSSMANN RK–1 OR CLASS "J" FUSE.
42. PROVIDE ENGRAVED PLASTIC LABELS TO IDENTIFY ALL PANEL BOARDS, XFMRS., DISTRIBUTION PANELS, DISCONNECT SWITCHES, AND TRANSFER SWITCHES, LABELS SHALL READ IN THIS FASHION "A" 208Y/120V 3PH, 4W, 225A, CKT. BKR OR FUSES TYPE AND SIZES.
43. E.C. SHALL VERIFY AND TEST GROUND TO SOURCE TO A MAXIMUM OF 5 OHMS. IF THE GROUND TEST DOES NOT ACHIEVE THE 5 OHMS LESS, E.C. SHALL BE RESPONSIBLE FOR PROVIDING THE NECESSARY CONDUCTORS AND GROUND RODS TO ACHIEVE 5 OHMS MAXIMUM.
44. BEFORE SUBMITTING BID, VERIFY EXISTING SITE CONDITIONS, ELECTRICAL SERVICE REQUIREMENTS AND THE EXACT SERVING UTILITY POINTS OF CONNECTION.
45. THE ELECTRICAL CONTRACTOR (E.C) SHALL FURNISH AND PAY FOR ALL PERMITS AND RELATED FEES.
46. UNLESS SPECIFICALLY NOTED OTHERWISE, ALL ELECTRICAL MATERIALS, EQUIPMENT AND WORK, SHOWN ON THESE PLANS ARE TO BE PROVIDED AND INSTALLED BY THE ELECTRICAL CONTRACTOR.
47. E.C. SHALL FURNISH AND INSTALL ALL SWITCHES, CONDUITS, WIRES, BOXES, LIGHT FIXTURES (INCLUDING LAMPS), SERVICE DEVICES, RECEPTACLES, SWITCHBOARDS AND PANEL BOARDS, ETC. REQUIRED FOR A COMPLETE AND OPERATING ELECTRICAL SYSTEM.
48. SEE ARCHITECTURAL DRAWINGS FOR DIMENSIONAL/LOCATION INFORMATION RELATING TO THE ELECTRICAL DRAWINGS.
49. ELECTRICAL CONTRACTOR SHALL VERIFY VOLTAGES AND HORSEPOWER RATINGS OF ALL MECHANICAL EQUIPMENT.
50. PRIOR TO INSTALLING ANY ELECTRICAL WORK. THE ELECTRICAL CONTRACTOR SHALL VERIFY EXACT LOCATIONS AND REQUIREMENTS ON THE JOB AND BY REFERENCE TO ARCHITECTURE, MECHANICAL AND EQUIPMENT SUPPLIERS DRAWINGS. SHOULD THERE BE ANY QUESTION OR PROBLEM CONCERNING THE NECESSARY PROVISIONS TO BE MADE, PROPER DIRECTIONS SHALL BE OBTAINED BEFORE PROCEEDING WITH ANY WORK.
51. OUTLET AND JUNCTION BOXES SHALL BE SIZED PER CODE FOR THE QUANTITY OF WIRES THEY CONTAIN. SEE ARTICLE 370 OF N.E.C. PROVIDE ADDITIONAL BOXES AND EXTENSION RINGS AS REQUIRED.
52. ELECTRICAL CONTRACTOR SHALL COMPLY WITH CABLE BENDING RADIUS REQUIREMENTS PER CABLE MANUFACTURES SPECIFICATION.
53. CONDUIT LAYOUTS SHOWN ON THE PLANS ARE DIAGRAMMATIC, NOT INDICATING THE ROUTING REQUIRED, THE CONTRACTOR SHALL ROUTE CONDUITS AS REQUIRED BY THE CONDITIONS OF INSTALLATION.
54. ALL EQUIPMENT PROVIDED BY THE ELECTRICAL CONTRACTOR SHALL BE LISTED AND LABELED BY A NATIONALLY– RECOGNIZED TESTING AGENCY, ACCEPTABLE TO THE AUTHORITY HAVING JURISDICTION, FOR THE CONDITIONS OF THE INSTALLATION.
55. PLANS INDICATE THE NUMBER OF PHASE NATURAL, AND GROUND CONDUCTORS WHERE MORE THAN THREE CONDUCTORS ARE TO BE INSTALLED IN A CONDUIT (THREE OR LESS CONDUCTORS ARE NOT SHOWN). ADDITIONAL CONDUCTORS REQUIRED FOR CONTROL SHALL BE INCLUDED EVEN IF NOT EXPLICITLY SHOWN.
56. WHERE SIZE IS NOT SHOWN ON THE DRAWINGS, CIRCUITS SHALL CONSIST OF #12 PHASE AND GROUNDED (NEUTRAL CONDUCTORS) AND A #12 CU GROUND IN A 3/4" CONDUIT.
57. UNLESS SPECIFICALLY NOTED OTHERWISE, THE ELECTRICAL CONTRACTOR SHALL MAKE FINAL CONNECTIONS TO ALL UTILIZATION EQUIPMENT SHOWN ON THE DRAWINGS. VERIFY THE TYPE OF FINAL CONNECTION AND PROVIDE APPROPRIATE WIRING METHOD.
58. PRIOR TO TRENCHING IN ANY AREA THE CONTRACTOR SHALL CONTACT ELECTRICAL, COMMUNICATIONS/DATA, CABLE T.V., GAS, AND WATER UTILITY PROVIDES (BLUE STRIKE) AND HAVE ALL UTILITIES IN THE AREA IDENTIFIED. IN ADDITION, THE CONTRACTOR SHALL OBTAIN THE SERVICES OF A SUBCONTRACTOR SPECIALIZING IN THE LOCATION OF UNDERGROUND STRUCTURES TO IDENTIFY ANY OBSTACLES IN THE PATH OF TRENCHING (PRIOR TO COMMENCING WORK). DAMAGE TO ANY UNDERGROUND STRUCTURES SHALL BE REPAIRED BY THE CONTRACTOR AT NO ADDITIONAL COST TO THE PROJECT.
59. ANY AND ALL WIRE THAT CARRIES A CURRENT MUST BE IN A CONDUIT. (GROUNDING WIRE FOR LOOPS, HALOS, ECT. IS CONSIDERED NON–CURRENT CARRYING.)

FOR SITES IN NDOT RIGHT–OF–WAY:

CONTRACTOR TO ENSURE LOCATES ARE COMPLETED PRIOR TO DIGGING IN THE ROW. IF UTILITIES ARE INDICATED WITHIN 3 FEET OF THE PROPOSED ROUTE, OR IF CROSSING EXISTING UTILITY, CONTRACTOR TO POTHOLE EXISTING UTILITY TO DETERMINE DEPTH AND EXACT LOCATION PRIOR TO CONSTRUCTION. IF UTILITY IS DAMAGED DURING THE INSTALLATION OF THE NEW CONDUIT, IT SHALL BE THE CONTRACTORS RESPONSIBILITY TO CONTACT THE UTILITY IMMEDIATELY AND IT IS ALSO THE CONTRACTORS RESPONSIBILITY TO HAVE ANY DAMAGE FIXED AND/OR REPAIRED PRIOR TO CLOSING THE EXCAVATION.

GENERAL NOTES | 1

TYPICAL HANDHOLE NOTES

1. CONCRETE COLLARS MAY BE DESIRED FOR INSTALLATIONS IN DRIVEWAYS, PARKING LOTS AND OFF–ROADWAY APPLICATIONS WHERE SUBJECT TO OCCASIONAL NON–DELIBERATE TRAFFIC. THIS APPLIES TO BOXES MADE FROM ANY MATERIAL TO PROVIDE ADDED PROTECTION FOR THE TOP LID. THIS IS NOT NECESSARY IN GRASSY AREAS OR AREAS SUBJECT TO PEDESTRIAN TRAFFIC.
2. CONCRETE ENCASEMENT TO BE 3,000 PSI MIN.
3. CONCRETE ENCASEMENT COLLAR DIMENSION "D" TO BE EQUAL TO DESIGN PAVEMENT DEPTH.
4. PAVEMENT AND SUBGRADE TO BE SHOWN ON THE ENGINEERING PLANS.
5. EXCAVATE THE HOLE APPROXIMATELY 6 TO 8" DEEPER THAN SUGGESTED HANDHOLE BURIAL DEPTH.
6. COMPACT THE SUBSOIL WITH A BACK–HOE OR A HYDRAULIC TAMPER. ADD APPROXIMATELY 6 TO 8" OF GRAVEL TO THE BOTTOM OF HOLE.
7. PLACE THE HANDHOLE ON THE LEVELED GRAVEL BED. LEVEL THE HANDHOLE.
8. BACK–FILL WITH LOOSE EARTH MATERIAL UP TO THE TOP SURFACE OF THE HANDHOLE. DO NOT BACK–FILL WITH CHUNKS OF FROZEN MATERIAL OR LARGE ROCKS NEXT TO THE GROUND SLEEVE. PACK THE BACK–FILL MATERIAL BY FOOT TAMPING, NO MACHINE TAMPING.
9. PROVIDE BARRIER HUBBELL QUAZITE # PG 2436BC30.
10. ALL UNDERGROUND CONDUITS SHALL BE SCH 40 PVC. EXCEPT THAT ELBOWS AND RISERS SHALL BE RMC ALL UNDERGROUND ELBOWS SHALL BE SWEEPING BENDS. 2'–0" MINIMUM SHALL BE REQUIRED.
11. THREE CONDUITS ARE SHOWN BELOW, ALTHOUGH MULTIPLE CONDUITS CAN BE PLACED IN THE SAME TRENCH. A MINIMUM SEPARATION IS REQUIRED PER THE LOCAL JURISDICTIONS AND UTILITY COMPANIES. IN ALL OTHER CASES, USE THE CONDUIT SPACING SCHEDULE TO MAINTAIN MINIMUM SPACING BETWEEN THE EXTERIOR WALL TO EXTERIOR WALL SEPARATION OF CONDUITS.
12. CONTRACTOR SHALL RESTORE THE TRENCH TO ITS ORIGINAL CONDITIONS BY EITHER SEEDING OR SODDING GRASS AREAS, OR REPLACING ASPHALT OR CONCRETE AREAS TO ITS ORIGINAL CROSS SECTION.
13. TRENCHING SAFETY; INCLUDING, BUT NOT LIMITED TO SOIL CLASSIFICATION, SLOPING, AND SHORING, SHALL BE GOVERNED BY THE CURRENT OSHA TRENCHING AND EXCAVATION SAFETY STANDARDS.
14. ALL CONDUITS SHALL BE INSTALLED IN COMPLIANCE WITH THE NATIONAL ELECTRIC CODE (NEC) OR AS REQUIRED BY THE LOCAL JURISDICTION.

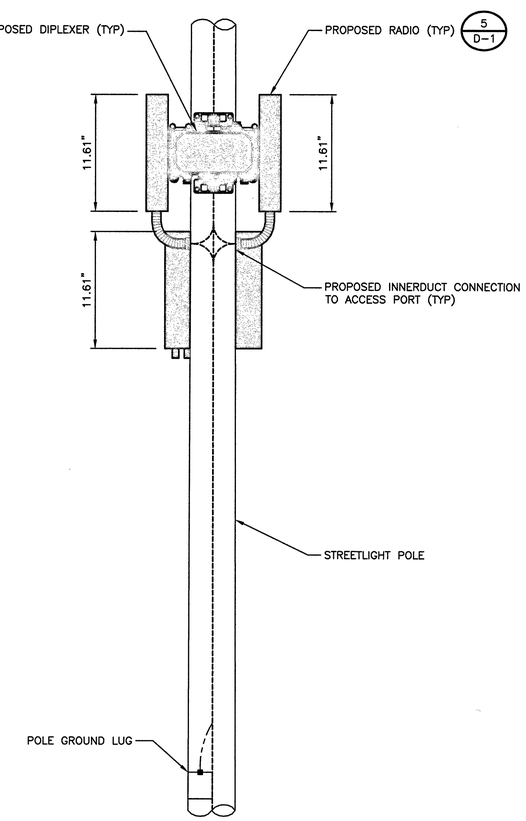

TYPICAL EQUIPMENT PLACEMENT DETAIL | NO SCALE | 2

COX

BLACK & VEATCH

BLACK & VEATCH CORPORATION
7760 FRANCE AVENUE SOUTH
SUITE 1200
BLOOMINGTON, MN 55435

THESE DRAWINGS ARE COPYRIGHTED AND ARE THE PROPERTY OF BLACK & VEATCH; PRODUCED SOLELY FOR THE USE OF OUR CLIENT. ANY REPRODUCTION OR USE OF THE INFORMATION CONTAINED WITHIN SAID DRAWINGS IS PROHIBITED WITHOUT WRITTEN CONSENT BY BLACK & VEATCH.

PROJECT NO.	DRAWN BY	CHECKED BY
199064.####	SRB	LEW

REV	DATE	DESCRIPTION
1	11/14/18	ISSUED FOR CONSTRUCTION
0	10/01/18	ISSUED FOR CONSTRUCTION

PROFESSIONAL ENGINEER – STATE OF NEVADA
ERIC S. BRANDSTADTER
Exp. 12/31/20
No. 015935
7/1/19

IT IS A VIOLATION OF LAW FOR ANY PERSON, UNLESS THEY ARE ACTING UNDER THE DIRECTION OF A LICENSED PROFESSIONAL ENGINEER, TO ALTER THIS DOCUMENT.

SITE ADDRESS

33AT0075SMC
CRAN_NVL08107F_R03
2300.25 W SAHARA AVE.
LAS VEGAS, NV 89102
SMALL CELL

SHEET TITLE

GENERAL CONSTRUCTION NOTES

SHEET NUMBER

GN-1

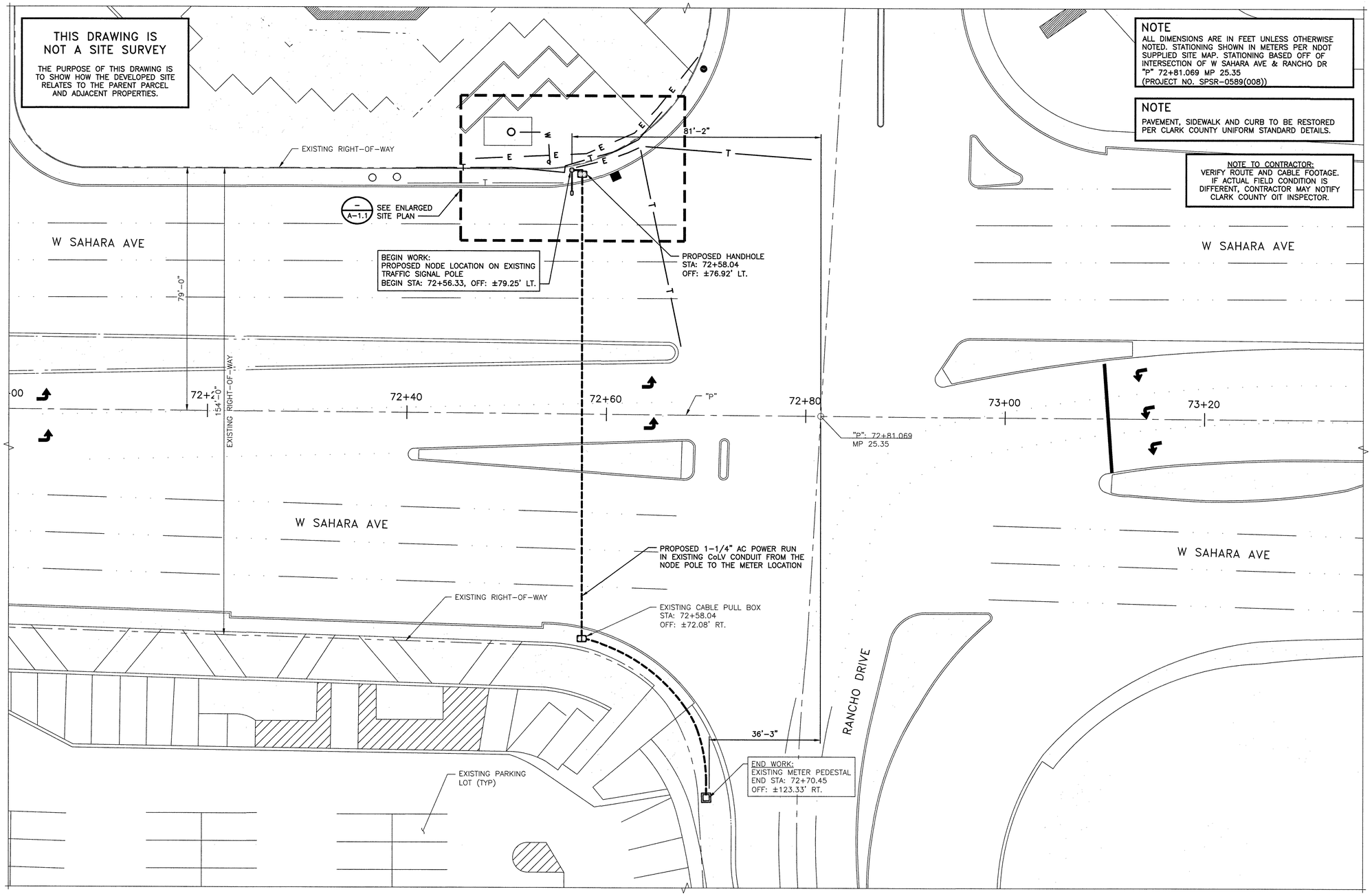

NOTE
ALL DIMENSIONS ARE IN FEET UNLESS OTHERWISE NOTED. STATIONING SHOWN IN METERS PER NDOT SUPPLIED SITE MAP. STATIONING BASED OFF OF INTERSECTION OF W SAHARA AVE & RANCHO DR "P" 72+81.069 MP 25.35 (PROJECT NO. SPSR-0589(008))

NOTE
PAVEMENT, SIDEWALK AND CURB TO BE RESTORED PER CLARK COUNTY UNIFORM STANDARD DETAILS.

NOTE TO CONTRACTOR:
VERIFY ROUTE AND CABLE FOOTAGE. IF ACTUAL FIELD CONDITION IS DIFFERENT, CONTRACTOR MAY NOTIFY CLARK COUNTY OIT INSPECTOR.

LEGEND
FACILITIES TO BE INSTALLED
FACILITIES TO BE REMOVED, ABANDONED AND/OR ADJUSTED
EXISTING FACILITIES

16' 12' 8' 4' 0 16' 32'
1/16"=1'-0"

OVERALL SITE PLAN

1

COX

BLACK & VEATCH

BLACK & VEATCH CORPORATION
7760 FRANCE AVENUE SOUTH
SUITE 1200
BLOOMINGTON, MN 55435

THESE DRAWINGS ARE COPYRIGHTED AND ARE THE PROPERTY OF BLACK & VEATCH; PRODUCED SOLELY FOR THE USE OF OUR CLIENT. ANY REPRODUCTION OR USE OF THE INFORMATION CONTAINED WITHIN SAID DRAWINGS IS PROHIBITED WITHOUT WRITTEN CONSENT BY BLACK & VEATCH.

PROJECT NO.	DRAWN BY	CHECKED BY
199064.####	SRB	LEW

REV	DATE	DESCRIPTION
1	11/14/18	ISSUED FOR CONSTRUCTION
0	10/01/18	ISSUED FOR CONSTRUCTION

PROFESSIONAL ENGINEER - STATE OF NEVADA
ERIC S. BRANDSTADTER
Exp. 12/31/20
No. 015929
11/14/19

IT IS A VIOLATION OF LAW FOR ANY PERSON, UNLESS THEY ARE ACTING UNDER THE DIRECTION OF A LICENSED PROFESSIONAL ENGINEER, TO ALTER THIS DOCUMENT.

SITE ADDRESS
33AT0075SMC
CRAN_NVL08107F_R03
2300.25 W SAHARA AVE.
LAS VEGAS, NV 89102
SMALL CELL

SHEET TITLE
OVERALL SITE PLAN

SHEET NUMBER
A-1

THIS DRAWING IS NOT A SITE SURVEY

THE PURPOSE OF THIS DRAWING IS TO SHOW HOW THE DEVELOPED SITE RELATES TO THE PARENT PARCEL AND ADJACENT PROPERTIES.

NOTE

ALL DIMENSIONS ARE IN FEET UNLESS OTHERWISE NOTED. STATIONING SHOWN IN METERS PER NDOT SUPPLIED SITE MAP. STATIONING BASED OFF OF INTERSECTION OF W SAHARA AVE & RANCHO DR "P" 72+81.069 MP 25.35 (PROJECT NO. SPSR-0589(008))

NOTE

PAVEMENT, SIDEWALK AND CURB TO BE RESTORED PER CLARK COUNTY UNIFORM STANDARD DETAILS.

NOTE TO CONTRACTOR:
VERIFY ROUTE AND CABLE FOOTAGE. IF ACTUAL FIELD CONDITION IS DIFFERENT, CONTRACTOR MAY NOTIFY CLARK COUNTY OIT INSPECTOR.

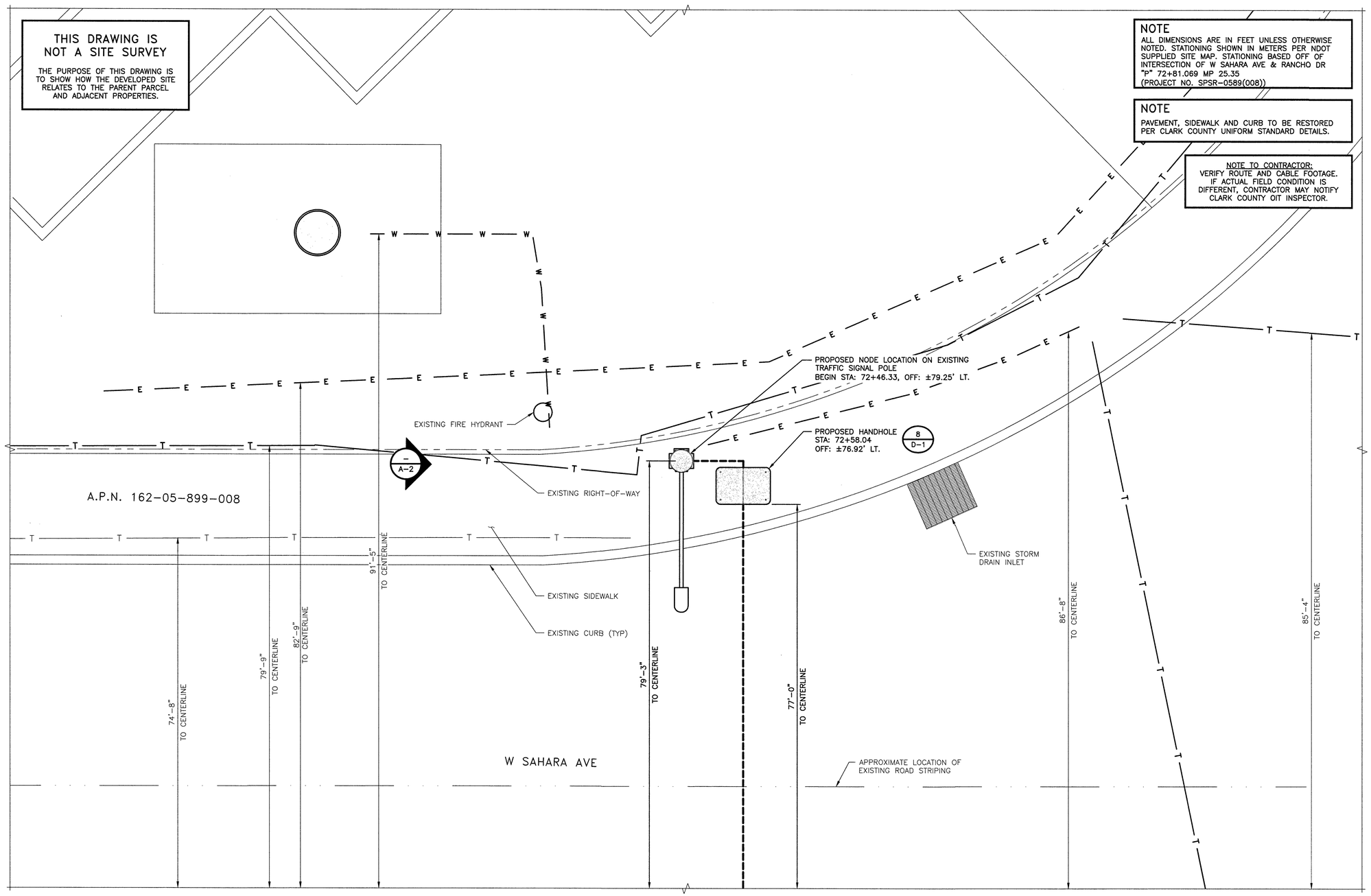

LEGEND

FACILITIES TO BE INSTALLED

FACILITIES TO BE REMOVED, ABANDONED AND/OR ADJUSTED

EXISTING FACILITIES

4' 2' 0 4' 8'
1/4"=1'-0"

1

ENLARGED SITE PLAN

COX

BLACK & VEATCH

BLACK & VEATCH CORPORATION
7760 FRANCE AVENUE SOUTH
SUITE 1200
BLOOMINGTON, MN 55435

THESE DRAWINGS ARE COPYRIGHTED AND ARE THE PROPERTY OF BLACK & VEATCH; PRODUCED SOLELY FOR THE USE OF OUR CLIENT. ANY REPRODUCTION OR USE OF THE INFORMATION CONTAINED WITHIN SAID DRAWINGS IS PROHIBITED WITHOUT WRITTEN CONSENT BY BLACK & VEATCH.

PROJECT NO.	DRAWN BY	CHECKED BY
199064.####	SRB	LEW

REV	DATE	DESCRIPTION
1	11/14/18	ISSUED FOR CONSTRUCTION
0	10/01/18	ISSUED FOR CONSTRUCTION

PROFESSIONAL ENGINEER - STATE OF NEVADA
ERIC S. BRANDSTADTER
Exp. 12/31/20
No. 015911
2/7/19

IT IS A VIOLATION OF LAW FOR ANY PERSON, UNLESS THEY ARE ACTING UNDER THE DIRECTION OF A LICENSED PROFESSIONAL ENGINEER, TO ALTER THIS DOCUMENT.

SITE ADDRESS

33AT0075SMC
CRAN_NVL08107F_R03
2300.25 W SAHARA AVE.
LAS VEGAS, NV 89102
SMALL CELL

SHEET TITLE

ENLARGED SITE PLAN

SHEET NUMBER

A-1.1

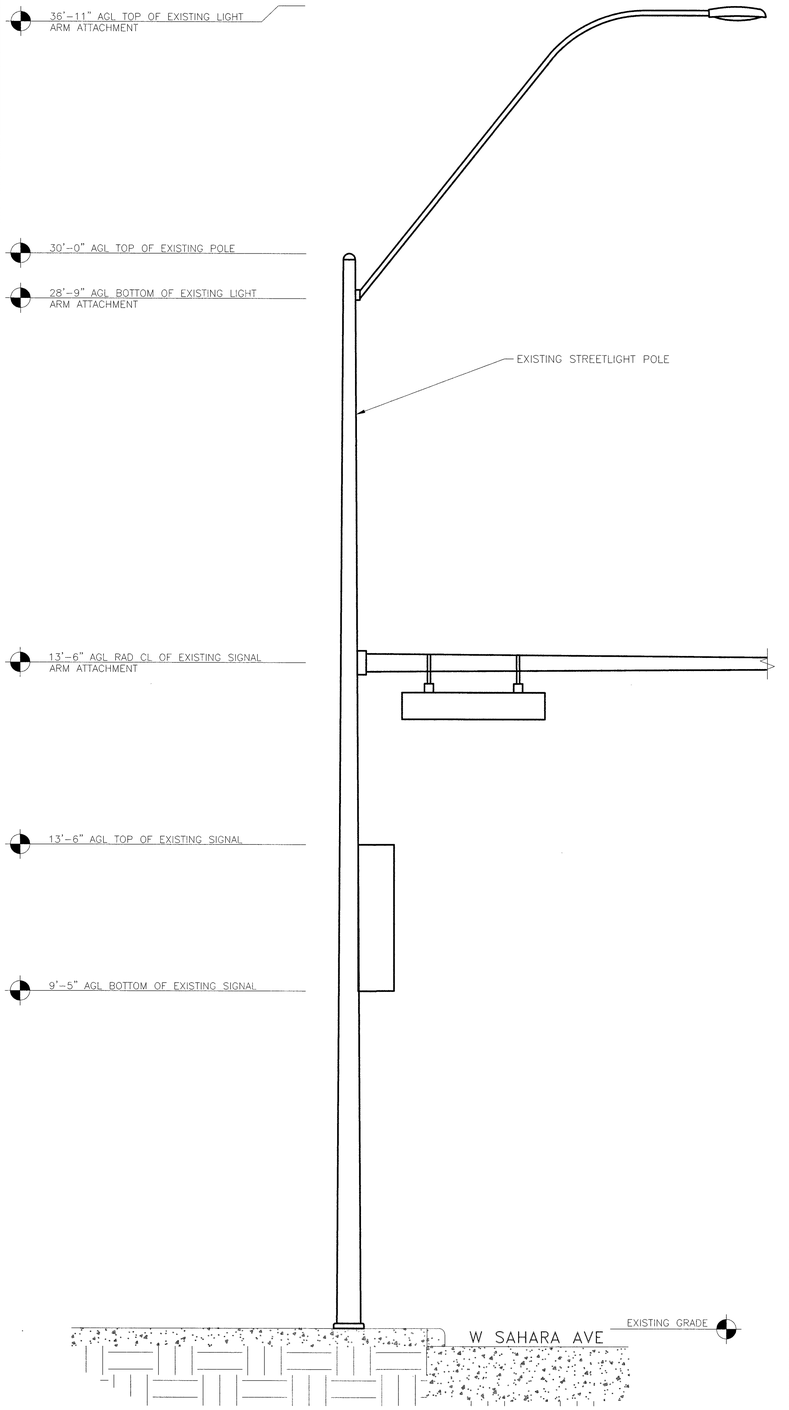

EXISTING WEST ELEVATION | 12" 6" 0 1' 2' 3' 4' 5' 1/2"=1'-0" | A

NOTES
1. ALL COAXIAL CABLE JUMPERS TO BE COMMSCOPE FSJ4-50B ½" OR ENGINEER APPROVED EQUAL.
2. PAINT PROPOSED EQUIPMENT TO MATCH EXISTING POLE.

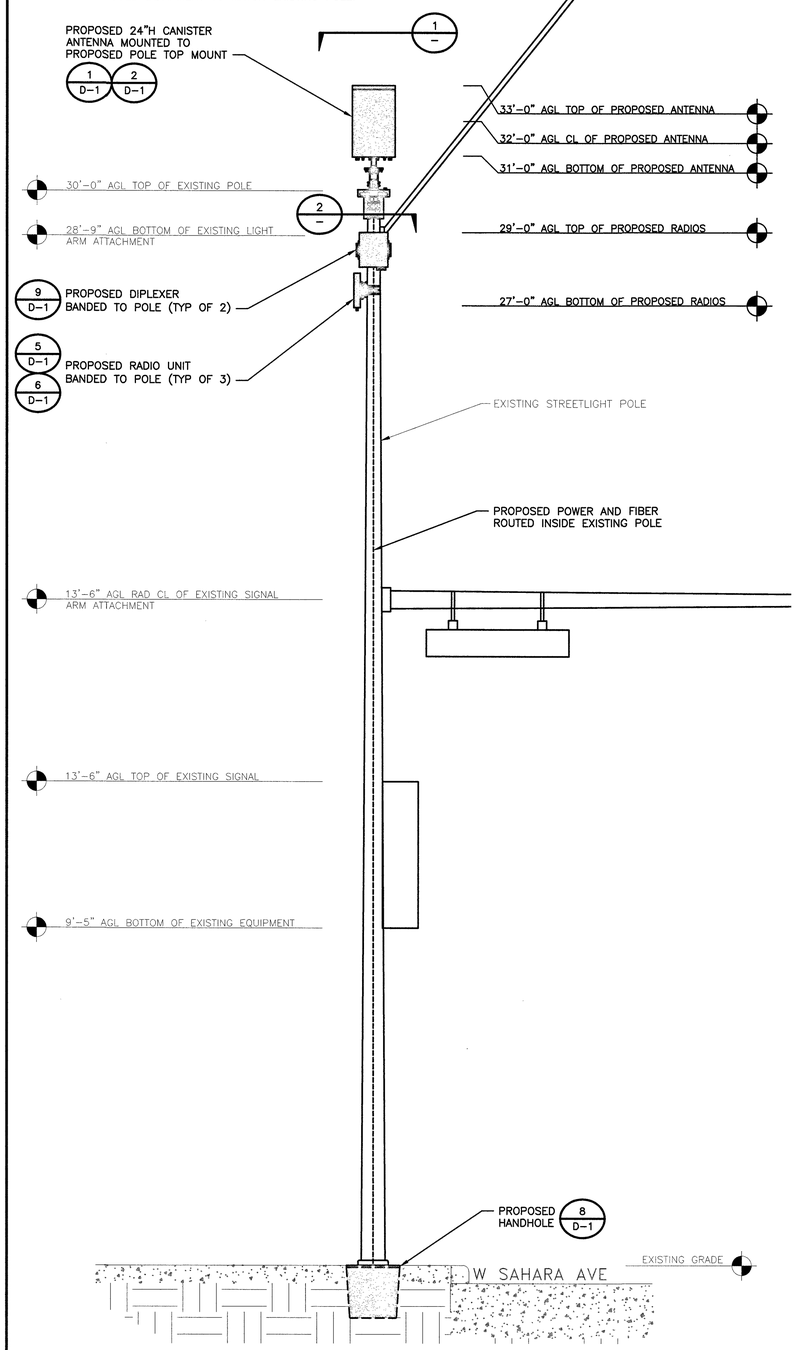

PROPOSED WEST ELEVATION | 12" 6" 0 1' 2' 3' 4' 5' 1/2"=1'-0" | B

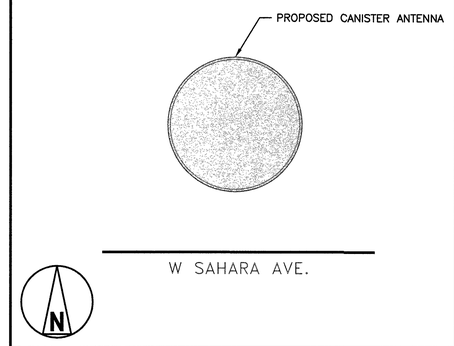

ANTENNA SPACE PLAN VIEW | NO SCALE | 1

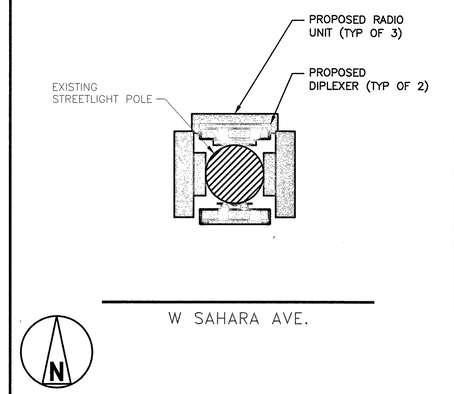

RADIO SPACE PLAN VIEW | NO SCALE | 2

NOT USED | NO SCALE | 3

COX

BLACK & VEATCH

BLACK & VEATCH CORPORATION
7760 FRANCE AVENUE SOUTH
SUITE 1200
BLOOMINGTON, MN 55435

THESE DRAWINGS ARE COPYRIGHTED AND ARE THE PROPERTY OF BLACK & VEATCH; PRODUCED SOLELY FOR THE USE OF OUR CLIENT. ANY REPRODUCTION OR USE OF THE INFORMATION CONTAINED WITHIN SAID DRAWINGS IS PROHIBITED WITHOUT WRITTEN CONSENT BY BLACK & VEATCH.

PROJECT NO.	DRAWN BY	CHECKED BY
199064.####	SRB	LEW

REV	DATE	DESCRIPTION
1	11/14/18	ISSUED FOR CONSTRUCTION
0	10/01/18	ISSUED FOR CONSTRUCTION

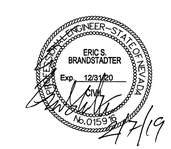

IT IS A VIOLATION OF LAW FOR ANY PERSON, UNLESS THEY ARE ACTING UNDER THE DIRECTION OF A LICENSED PROFESSIONAL ENGINEER, TO ALTER THIS DOCUMENT.

SITE ADDRESS
33AT0075SMC
CRAN_NVL08107F_R03
2300.25 W SAHARA AVE.
LAS VEGAS, NV 89102
SMALL CELL

SHEET TITLE
ELEVATIONS

SHEET NUMBER
A-2

GAMMA NU DOYZ9X360F12

DIAMETER:	14.4" (365mm)
HEIGHT:	24" (610mm)
TOTAL WEIGHT (WITHOUT MOUNT):	29.7 lbs (13.5 kg)
CONNECTOR INTERFACE:	(12) 4.3–10 FEMALE
RF CONNECTOR LOCATION:	BOTTOM

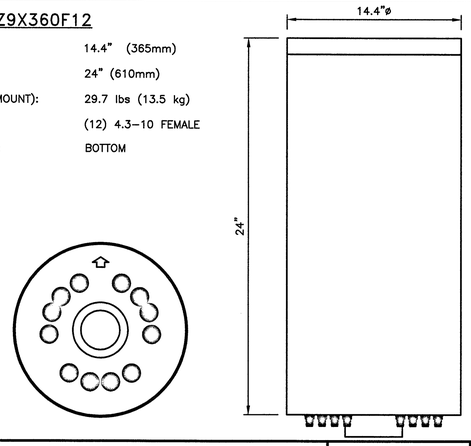

ANTENNA SPECIFICATIONS | NO SCALE | 1

CONCEALFAB 008530MO

DIMENSIONS HxW: 11.46"x7.00"ø
WEIGHT (NO ANTENNA): 7.8 lbs (3.5 kg)

* DETAIL IS FOR GRAPHIC REPRESENTATION, CONTRACTOR MUST REFERENCE MANUFACTURERS DRAWINGS PRIOR TO CONSTRUCTION.

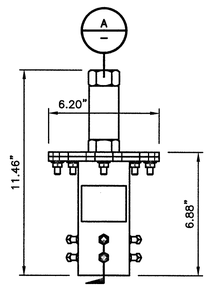

FRONT VIEW

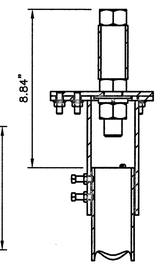

SECTION A

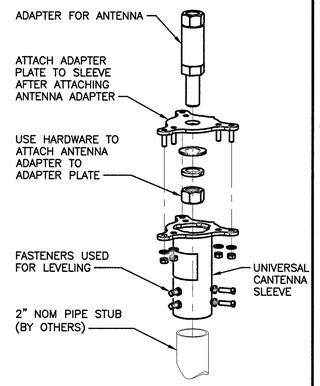

MOUNT ASSEMBLY

ANTENNA SLEEVE MOUNT | NO SCALE | 2

CONCEALFAB 007948MO

DIMENSIONS HxWxL: 12.75"x6.65"x10.75" (324x169x273 mm)

WEIGHT: 22 lbs (10 kg)

* DETAIL IS FOR GRAPHIC REPRESENTATION, CONTRACTOR MUST REFERENCE MANUFACTURERS DRAWINGS PRIOR TO CONSTRUCTION.

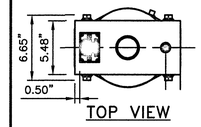

TOP VIEW

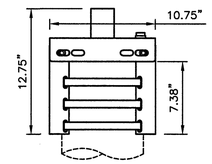

FRONT VIEW

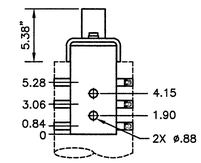

SIDE VIEW

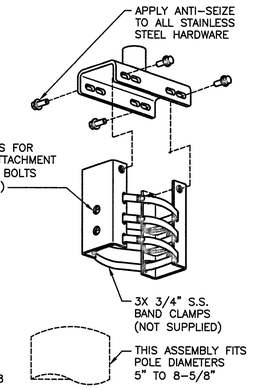

ASSEMBLY VIEW

STANDARD POLE TOP MOUNT | NO SCALE | 3

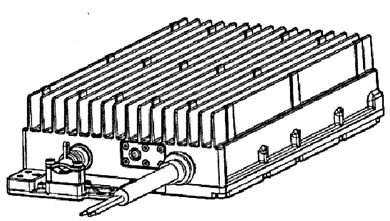

NOT USED | NO SCALE | 4

NOKIA AIRSCALE MICRO B25/B66A RRH

DIMENSIONS, HxWxD:	11.61"x9.65"x2.17" (295x245x55mm)
WEIGHT:	12.79 lbs (5.8 kg)
INTERFACES:	(2) CPRI FRONTHAUL PORTS (1) EXTERNAL ALARM PORT
POWER CONSUMPTION :	TYP. 110W, MAX. 150W
TEMP. RANGE:	−40°C TO +55°C

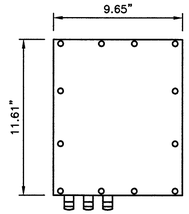

FRONT VIEW

SIDE VIEW

RADIO SPECIFICATIONS | NO SCALE | 5

NOKIA AIRSCALE B46 (LAA) RRH

DIMENSIONS, HxWxD:	11.6"x9.6"x1.6" (294.64x243.84x40.64mm)
WEIGHT:	11.7 lbs (5.31 kg)
INTERFACES:	(1) CPRI SFP INCLUDED
ANTENNA CONFIGURATION:	2T2R
RF:	NEX10 PLUS FEMALE

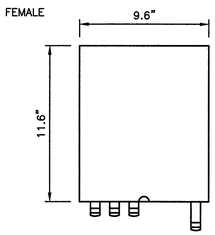

FRONT VIEW

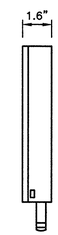

SIDE VIEW

RADIO SPECIFICATIONS | NO SCALE | 6

DESIGN CRITERIA

* 2012 IBC
* Vult = 105 MPH (ASCE 7–10 TBL 26.5–1C)
  Vasd = 81 MPH
  RISK CATEGORY 1
  WIND EXPOSURE C
* ALLOWABLE LATERAL BEARING PRESSURE = 100 PSF/FT
* INCRESE FOR SHORT TERM LOADS, DEPTH, AND 1/2" MOVEMENT TAKEN.
* ASSUMED 5 SQUARE FOOT RECTANGLE AT TOP OF POLE.

POLE HEIGHT	FOOTING DEPTH
8'–0"	2'–9"
12'–0"	3'–3"
20'–0"	4'–0"
30'–0"	5'–0"
40'–0"	6'–0"

PLAN VIEW

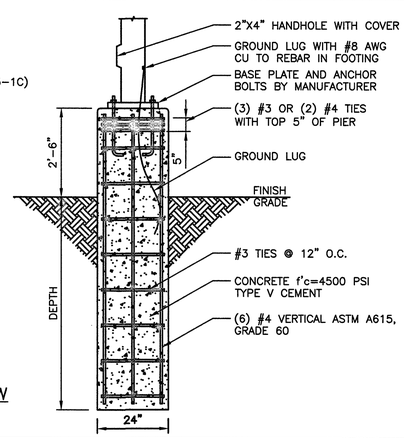

EXISTING BOLTED LIGHT POLE BASE DETAIL | NO SCALE | 7

NOTES

1. COVERS INSTALLED IN TRAFFIC AND OPEN AREAS ACCESSIBLE TO TRAFFIC SHALL BE PER STANDARD DRAWING NO. 327.
2. SEE STANDARD DRAWING NO. 323 FOR COVER GROUNDING.
3. REFER TO SHEET GN–1 FOR ADDITIONAL HANDHOLE NOTES.

PULL BOX			
	SIZE (COMMERCIAL DESIGNATION)		
	3-1/2	5	7
A	15	21-3/4	30-5/8
B	10	11-3/4	17-5/8
C	3/4	2	2
D	19-3/8	25	34-3/4
E	14-3/8	15	21-3/4
F	12	12	12
G	N/A	10-1/4	11-1/2

NOMINAL DIMENSION IN INCHES

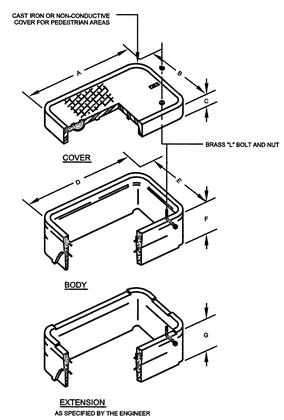

CONCRETE PULL BOX SPECIFICATIONS | NO SCALE | 8

COMMSCOPE CBC1923T–4310 E11F13P06

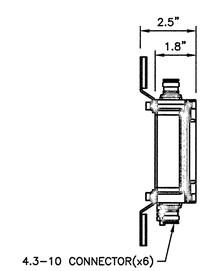

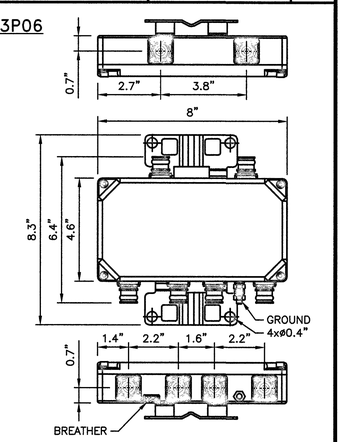

DIPLEXER SPECIFICATIONS | NO SCALE | 9

COX

BLACK & VEATCH

BLACK & VEATCH CORPORATION
7760 FRANCE AVENUE SOUTH
SUITE 1200
BLOOMINGTON, MN 55435

THESE DRAWINGS ARE COPYRIGHTED AND ARE THE PROPERTY OF BLACK & VEATCH; PRODUCED SOLELY FOR THE USE OF OUR CLIENT. ANY REPRODUCTION OR USE OF THE INFORMATION CONTAINED WITHIN SAID DRAWINGS IS PROHIBITED WITHOUT WRITTEN CONSENT BY BLACK & VEATCH.

PROJECT NO.	DRAWN BY	CHECKED BY
199064.####	SRB	LEW

REV	DATE	DESCRIPTION
1	11/14/18	ISSUED FOR CONSTRUCTION
0	10/01/18	ISSUED FOR CONSTRUCTION

IT IS A VIOLATION OF LAW FOR ANY PERSON, UNLESS THEY ARE ACTING UNDER THE DIRECTION OF A LICENSED PROFESSIONAL ENGINEER, TO ALTER THIS DOCUMENT.

SITE ADDRESS

33AT0075SMC
CRAN_NVL08107F_R03
2300.25 W SAHARA AVE.
LAS VEGAS, NV 89102
SMALL CELL

SHEET TITLE

EQUIPMENT DETAILS

SHEET NUMBER

D-1

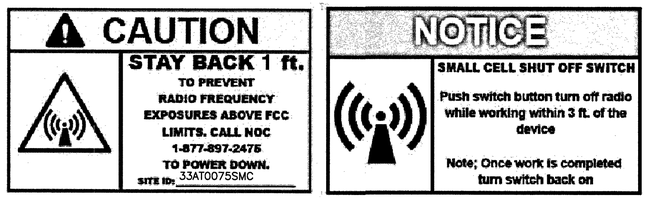

RF WARNING PLACARDS | NO SCALE | 1

MULTI-TAP CONNECTOR WITH CLEAR INSULATION, DOUBLE-SIDED (PCSB4-4-6Y)

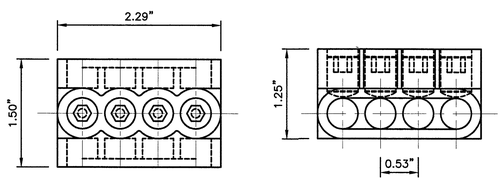

CONNECTOR DETAIL | NO SCALE | 2

BUSSMAN HEB-AW-RLC-A

DIMENSIONS, LENGTH: 4.4"

WIRE RANGE: #8-16; (2) #12-16

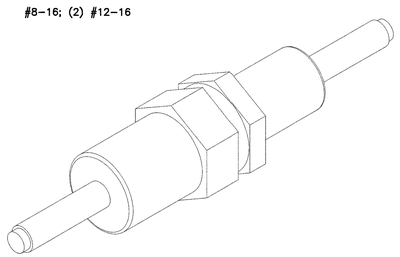

BREAKAWAY FUSE DETAIL | NO SCALE | 3

NOTES

1. CONTRACTOR IS TO FIELD VERIFY ALL EXISTING ITEMS SHOWN ON THE ELCTRICAL ONE-LINE DIAGRAM AND NOTIFY THE ENGINEER OF ANY DISCREPANCIES.
2. ALL NEW CONDUCTOR WIRE TO BE INSTALLED SHALL BE COPPER THWN-2, THW-2, RHW-2, XHHW-2 WIRE UNLESS NOTED OTHERWISE.
3. ALL GROUNDING AND BONDING TO BE PER THE RECOGNIZED EDITION OF THE NATIONAL ELECTRIC CODE (NEC).
4. ALL INSTALLED CONDUCTORS AND SIGNAL CABLES TO BE CLEARLY MARKED "COX COMMUNICATIONS" WITH BRASS OR FIBERGLASS TAGS.

120VAC FEEDER CONDUCTOR MAXIMUM DISTANCE		
#12 AWG	400'-0"	3% VOLT DROP @ 2.5A
#10 AWG	675'-0"	3% VOLT DROP @ 2.5A

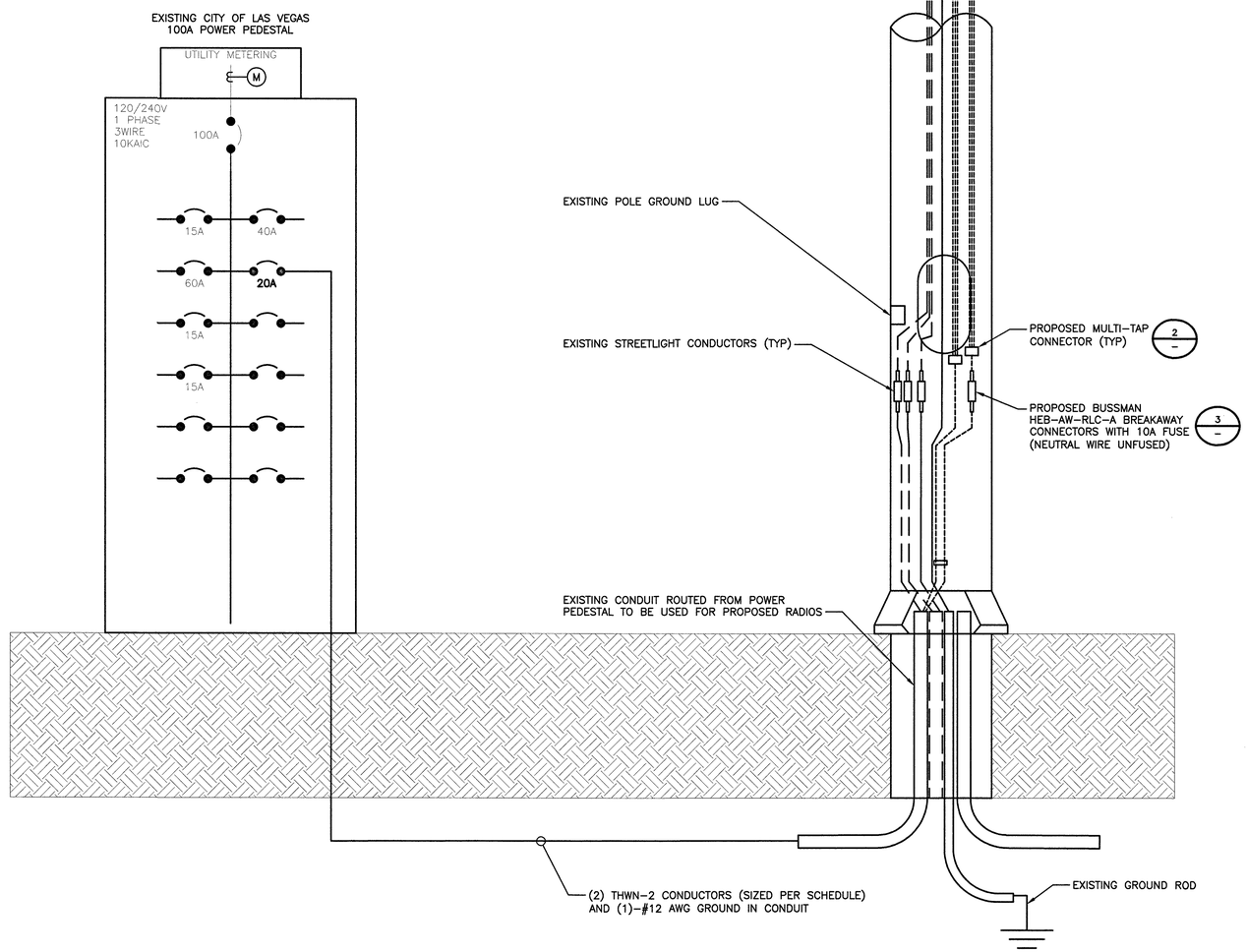

TYPICAL POLE SITE TEMPLATE | NO SCALE | 4

COX

BLACK & VEATCH

BLACK & VEATCH CORPORATION
7760 FRANCE AVENUE SOUTH
SUITE 1200
BLOOMINGTON, MN 55435

THESE DRAWINGS ARE COPYRIGHTED AND ARE THE PROPERTY OF BLACK & VEATCH; PRODUCED SOLELY FOR THE USE OF OUR CLIENT. ANY REPRODUCTION OR USE OF THE INFORMATION CONTAINED WITHIN SAID DRAWINGS IS PROHIBITED WITHOUT WRITTEN CONSENT BY BLACK & VEATCH.

PROJECT NO.	DRAWN BY	CHECKED BY
199064.####	SRB	LEW

REV	DATE	DESCRIPTION
1	11/14/18	ISSUED FOR CONSTRUCTION
0	10/01/18	ISSUED FOR CONSTRUCTION

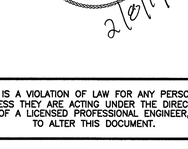

2/8/19

IT IS A VIOLATION OF LAW FOR ANY PERSON, UNLESS THEY ARE ACTING UNDER THE DIRECTION OF A LICENSED PROFESSIONAL ENGINEER, TO ALTER THIS DOCUMENT.

SITE ADDRESS

33AT0075SMC
CRAN_NVL08107F_R03
2300.25 W SAHARA AVE.
LAS VEGAS, NV 89102
SMALL CELL

SHEET TITLE

ELECTRICAL DETAILS AND DIAGRAMS

SHEET NUMBER

E-1

EXISTING ELECTRICAL LOAD STUDY

EXISTING LOAD.....30.0 AMPS
ALLOWED LOAD 80%.....80 AMPS

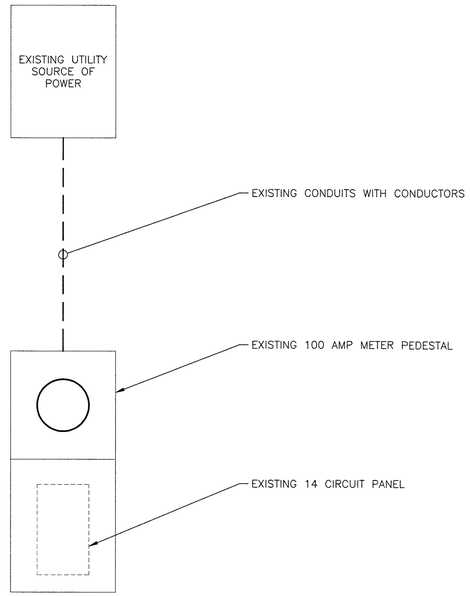

EXISTING SINGLE LINE DIAGRAM | NO SCALE | 1

PROPOSED ELECTRICAL LOAD STUDY

EXISTING LOAD.....30.0 AMPS
SAFETY FACTOR 125%.....37.50 AMPS
PROPOSED LOAD.....2.34 AMPS
TOTAL LOAD.....39.84 AMPS
ALLOWED LOAD 80% OF 200 AMPS.....80 AMPS

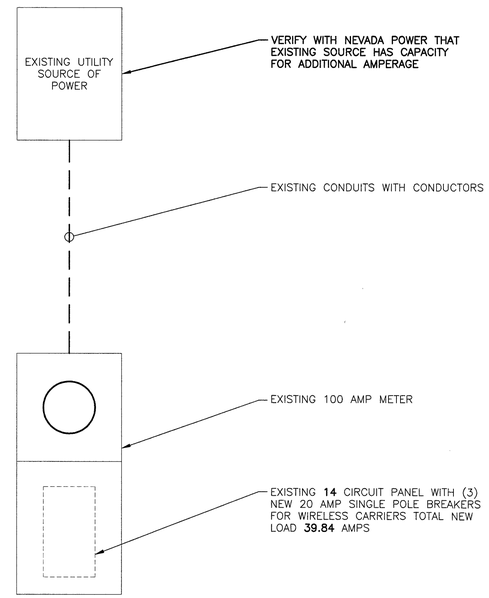

PROPOSED SINGLE LINE DIAGRAM | NO SCALE | 2

Site Name:		2300 W. SAHARA AVE					MODEL NUMBER:		TESCO METER PEDESTAL							
SITE NUMBER:		33AT0075SMC					PHASE:		1			WIRE:			3	
VOLTAGE:		240	/120	Volts AC			BUSS RATING:		100	AMPS						
MAIN BREAKER:		100	AMPS													
MOUNT:		SURFACE														
ENCLOSURE TYPE:		NEMA 3R														
PANEL STATUS:		EXISTING														
CKT	LOAD DESCRIPTION	BREAKER AMPS	BREAKER POLES	BREAKER STATUS	SERVICE LOAD VA	Demand Factor	USAGE FACTOR	PHASE A VA	PHASE B VA	USAGE FACTOR	Demand Factor	SERVICE LOAD VA	BREAKER STATUS	BREAKER POLES	BREAKER AMPS	LOAD DESCRIPTION	CKT
1	MAIN BREAKER	100	2	ON	0	1.00	1.00	7065		1.25	1.00	5652	ON	1	40	STREET LIGHTS	2
3					0	1.00	1.00		563	1.25	1.00	450	NEW	1	20	PROPOSED COX SMALL CELL	4
5								0		1.00	1.00	0	OFF	1	20	TELECOM (FUTURE)	6
7	CONTROLS	15	1	ON	780	1.00	1.25		975	1.00	1.00	0	OFF	1	20	TELECOM (FUTURE)	8
9	SIGNAL	60	1	ON	612	1.00	1.25	765									10
11	SPARE	15	1	OFF	0	1.00	1.00		0								12
13	SIGN	15	I	ON	156	1.00	1.25	195									14
								PHASE A	PHASE B								
								8025	1538	VA							
									TOTAL	KVA	9.56						
										AMPS	39.84	≤ 80% OF MAIN BREAKER					

PROPOSED PANEL SCHEDULE AND CALCS | NO SCALE | 3

COX

BLACK & VEATCH

BLACK & VEATCH CORPORATION
7760 FRANCE AVENUE SOUTH
SUITE 1200
BLOOMINGTON, MN 55435

THESE DRAWINGS ARE COPYRIGHTED AND ARE THE PROPERTY OF BLACK & VEATCH; PRODUCED SOLELY FOR THE USE OF OUR CLIENT. ANY REPRODUCTION OR USE OF THE INFORMATION CONTAINED WITHIN SAID DRAWINGS IS PROHIBITED WITHOUT WRITTEN CONSENT BY BLACK & VEATCH.

PROJECT NO.	DRAWN BY	CHECKED BY
199064.####	SRB	LEW

REV	DATE	DESCRIPTION
1	11/14/18	ISSUED FOR CONSTRUCTION
0	10/01/18	ISSUED FOR CONSTRUCTION

PROFESSIONAL ENGINEER - STATE OF NEVADA
DAVID C. HINTON
Exp. 6/30/2019
ELECTRICAL
No. 025351
2/8/19

IT IS A VIOLATION OF LAW FOR ANY PERSON, UNLESS THEY ARE ACTING UNDER THE DIRECTION OF A LICENSED PROFESSIONAL ENGINEER, TO ALTER THIS DOCUMENT.

SITE ADDRESS
33AT0075SMC
CRAN_NVL08107F_R03
2300.25 W SAHARA AVE.
LAS VEGAS, NV 89102
SMALL CELL

SHEET TITLE
ELECTRICAL SINGLE LINE DIAGRAMS

SHEET NUMBER
E-2

NOTES

1. FOR CONDUIT SIZE AND WIRING REQUIREMENTS FOR STREETLIGHT SERVICE, SEE STANDARD DRAWING NO. 332.S2 FOR LAS VEGAS AND CLARK COUNTY ONLY AND 332.S1 FOR ALL OTHER ENTITIES.
2. SEE STANDARD DRAWING NO. 321, 332.S1, OR 332.S2.

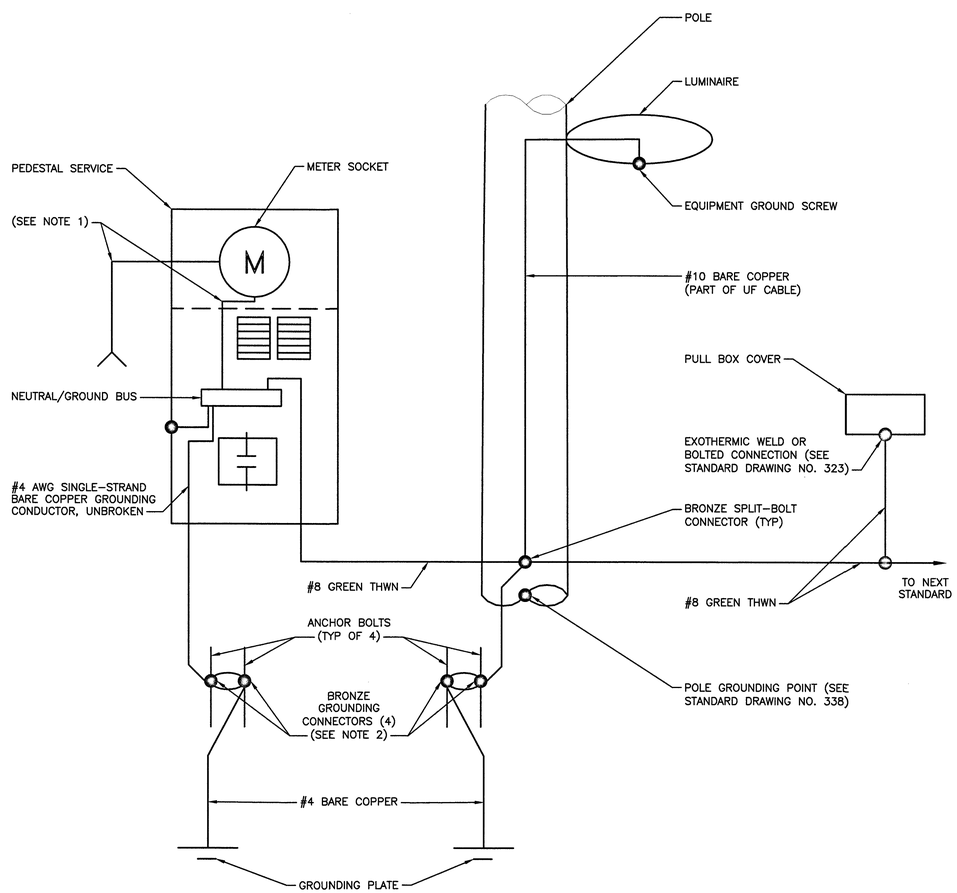

METER PEDESTAL GROUNDING DIAGRAM | NO SCALE | 1

NOTES

1. 125 AMP SERVICE: 1 #4 WHITE THW
   200 AMP SERVICE: 1 #1/0 WHITE THW

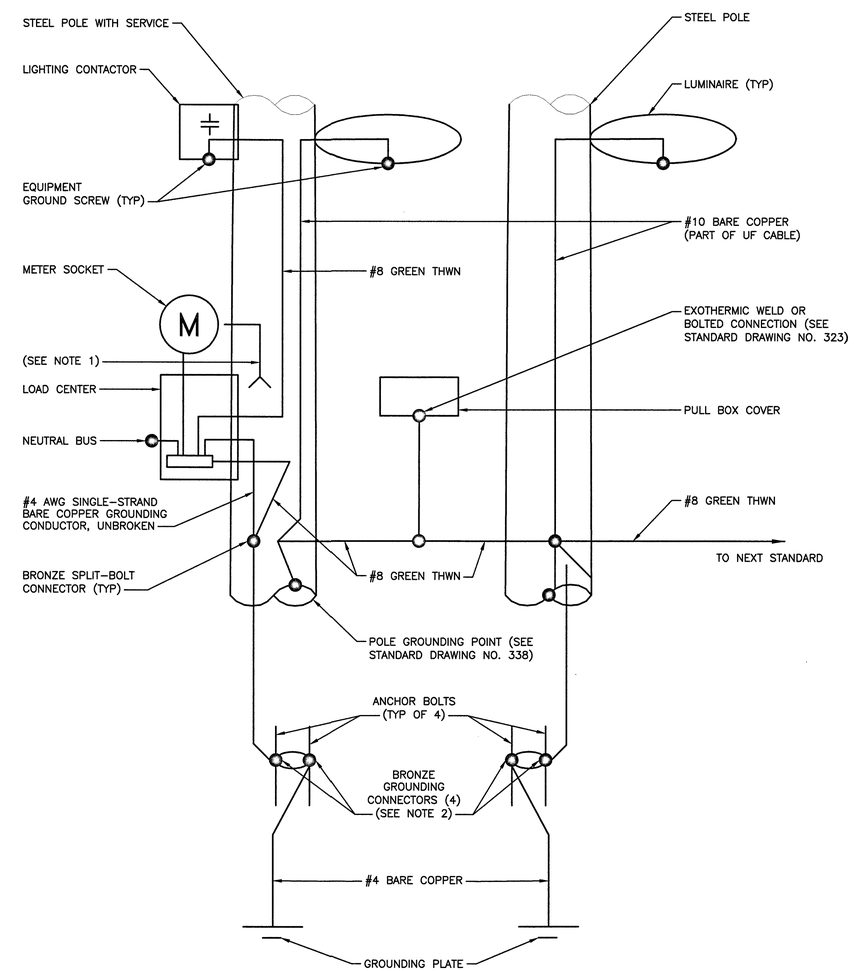

POLE EQUIPMENT GROUNDING DIAGRAM | NO SCALE | 2

COX

BLACK & VEATCH

BLACK & VEATCH CORPORATION
7760 FRANCE AVENUE SOUTH
SUITE 1200
BLOOMINGTON, MN 55435

THESE DRAWINGS ARE COPYRIGHTED AND ARE THE PROPERTY OF BLACK & VEATCH; PRODUCED SOLELY FOR THE USE OF OUR CLIENT. ANY REPRODUCTION OR USE OF THE INFORMATION CONTAINED WITHIN SAID DRAWINGS IS PROHIBITED WITHOUT WRITTEN CONSENT BY BLACK & VEATCH.

PROJECT NO.	DRAWN BY	CHECKED BY
199064.####	SRB	LEW

REV	DATE	DESCRIPTION
1	11/14/18	ISSUED FOR CONSTRUCTION
0	10/01/18	ISSUED FOR CONSTRUCTION

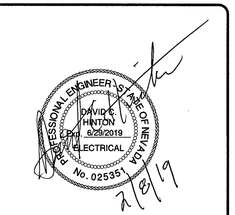

IT IS A VIOLATION OF LAW FOR ANY PERSON, UNLESS THEY ARE ACTING UNDER THE DIRECTION OF A LICENSED PROFESSIONAL ENGINEER, TO ALTER THIS DOCUMENT.

SITE ADDRESS

33AT0075SMC
CRAN_NVL08107F_R03
2300.25 W SAHARA AVE.
LAS VEGAS, NV 89102
SMALL CELL

SHEET TITLE

GROUNDING DIAGRAMS

SHEET NUMBER

G-1

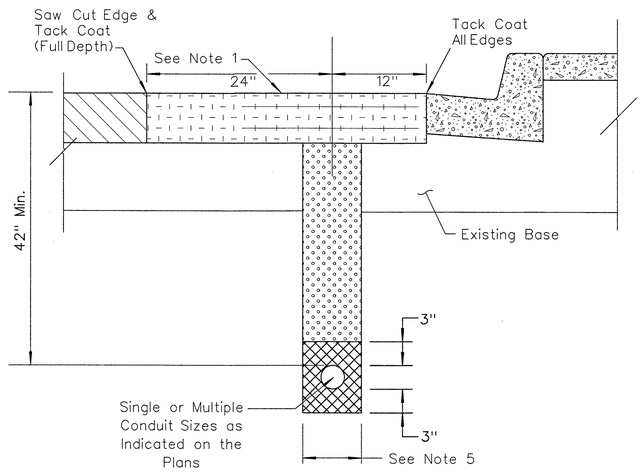

LONGITUDINAL

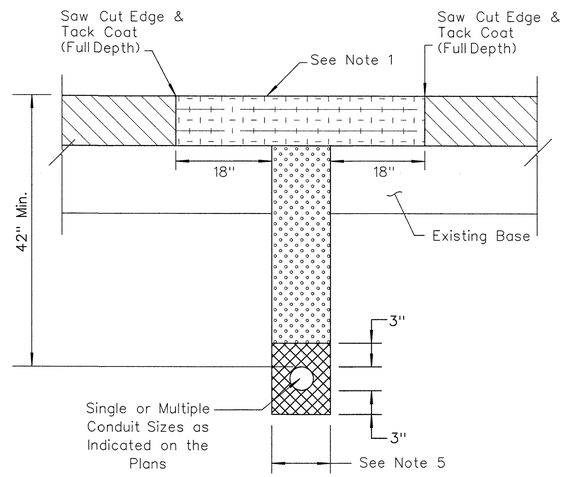

TRANSVERSE

TRENCHING IN PAVEMENT

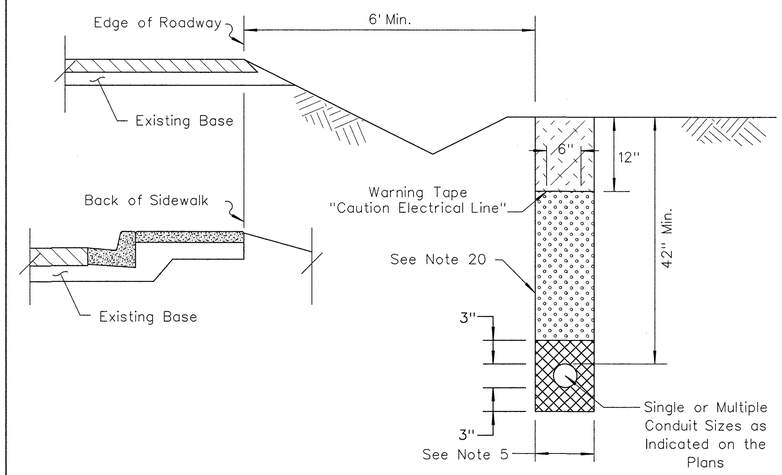

TRENCHING IN NATIVE SOIL (CLASS A SLURRY)

NOTES:

1. Remove existing pavement and replace with new approved material of same type. Match existing structural section (including open grade) and existing pavement depth but not less than 6 inches, and seal new surface as directed by the Engineer.
2. Recompact existing base material around trench to meet compaction requirements for that material type and location.
3. New asphalt and concrete pavement material shall be approved by the Engineer and obtained from an approved source.
4. Unless otherwise provided for in the base and surface summaries new pavement material and trenching shall not be paid for directly but included in the price for the conduit.
5. Total trench width shall be 6 inches wider than the outside edges of conduit(s) installed Use conduit spacers to separate multiple conduits in trench by at least 1 inch. Place spacers at intervals of 5 feet maximum Conduits shall be centered in trench.
6. For trenching in a non NDOT–owned facility, use the owner s standards for trenching, compaction, and patching.
7. Longitudinal trenching in shoulder: If shoulder is 4 foot wide or Less, remove all surface material from edge of oil to shoulder stripe and replace.
8. Engineer may for good cause, require wider patch sections or otherwise alter the requirements
9. If saw cut is within 2 feet of an existing pavement edge or existing patch, remove existing pavement to that edge and replace entire section
10. If sawcut edges for trench fall within a wheel path, sawcut shall be extended to, and removal made to edge of the travel lane Optionally the entire travel lane can be rotomilled to a depth of 2 inches and overlayed with 2 inches of bituminous plantmix as directed by the Engineer.
11. Contractor shall be responsible for replacement of loop detectors, adjustments of utilities and survey monuments to grade and installation of temporary pavement markings.
12. Permanent resurfacing shall not be placed on trenches backfilled with concrete slurry for a minimum of 7 days after placement of the concrete slurry or similar material Provide temporary cover or backfill as directed by the Engineer.

LEGEND:

- EXISTING PAVEMENT
- LIMITS OF REMOVAL & REPAIR OF PAVEMENT
- SAND BEDDING (SEE NOTE 14)
- CLASS A SLURRY CEMENT BACKFILL
- BACKFILL

13. Use of rock wheel trenching machines or similar equipment may be permitted within paved areas or within 1foot of the edge of paving, as directed by the Engineer.
14. Sand bedding shall conform to gradation requirements in Subsection 706.03.03
15. If installing underground electrical facilities or supplies, refer to NAC 408.447 and 408.453
16. Slurry backfill in accordance with Section 207 if within the roadside slope or ditches
17. Conduit couplings shall be staggered
18. Detectable pull tape shall be installed inside all conduits
19. Return disturbed area to match existing grade
20. Native backfill acceptable when specified on plans or approved in writing by the Engineer Native backfill shall not contain rocks larger than 3 inches

STATE OF NEVADA
DEPARTMENT OF TRANSPORTATION

TRAFFIC CONDUIT
TRENCHING DETAIL

T-30.2.4 (623)		Signed Original On File
ADOPTED 2/71	REVISED 10/15	CHIEF TRAFFIC OPS ENGR.

SMALL CELL SITE SURVEY
SITE: 33AT0075SMC
SE¼SE¼ SECTION 5, TOWNSHIP 21 SOUTH, RANGE 61 EAST

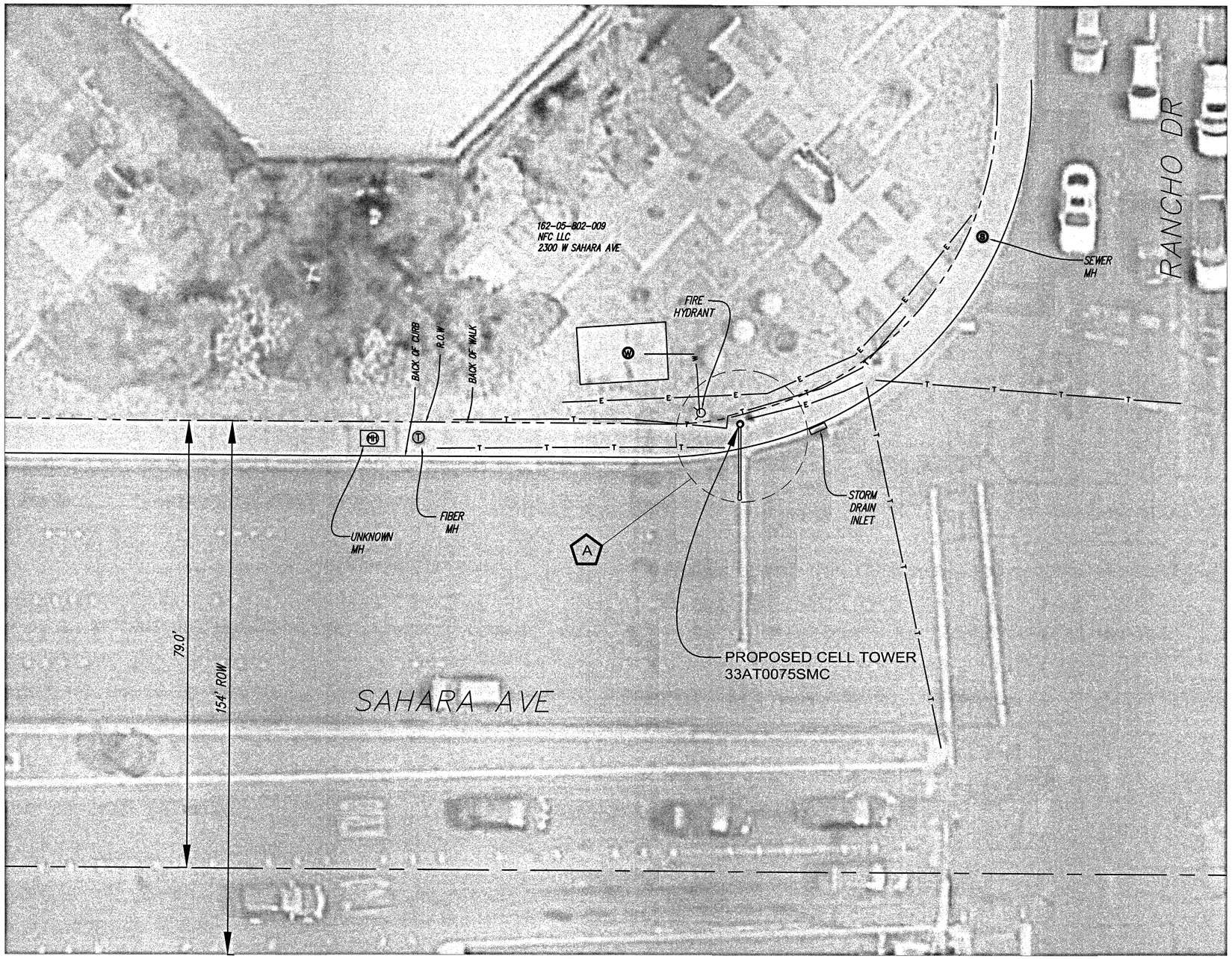

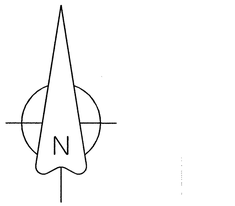

GRAPHIC SCALE

20 0 10 20

FEET

A *LATITUDE:* 36°08'40.19"N
LONGITUDE: 115°10'24.42"W
GROUND ELEVATION: 2076.46'
NAVD '88

Legend

- MONUMENT
- POLE
- DOWN GUY
- GAS VALVE
- PEDASTAL
- LAMP POST
- WATER VALVE
- FIRE HYDRANT
- WATER MANHOLE
- WATER METER
- SEWER MANHOLE
- UNKNOWN OR LABELED MANHOLE
- SANITARY SEWER MANHOLE
- STORM WATER MANHOLE
- ELECTRIC MANHOLE
- TELECOM MANHOLE
- TREE

FENCELINE
ROW LINE
CENTER LINE
SEWER — S
TELEPHONE — T
WATER — W
ELECTRIC — E
GAS LINE — G
OVERHEAD ELEC
FENCE BARB — X
PROPERTY LINE

COX

6205-B Peachtree Dunwoody Road NE
Atlanta, GA 30328

ENGINEERS:

BLACK & VEATCH

6 SUNSET WAY
SUITE B108
HENDERSON, NV 89014

SITE NO:	33AT0075SMC
DRAWN BY:	KJC
CHECKED BY:	CIS

REV	DATE	DESCRIPTION
A	6/25/18	PRELIMINARY SUBMITTAL

SURVEYOR:

CIS
PROFESSIONAL LAND SURVEYING
435-660-0816

CIS JOB NO:
CIS 315-2-1-18

SHEET TITLE
SMALL CELL SITE SURVEY

SHEET NUMBER
1 OF 1

TRAFFIC ENGINEERING
FIELD OPERATIONS
3001 RONEMUS DRIVE
LAS VEGAS, NV 89128
PHONE: (702) 229-6331

CITY OF LAS VEGAS

SMALL CELL SITE SURVEY

- *THIS FORM IDENTIFIES THE POTENITAL POWER SUPPLY SOURCE FOR A PROPOSED SMALL CELL SITE*
- *THIS ONLY REPRESENTS THE CONDITIONS AT TIME OF SITE SURVEY*
- *FIELD CONDITIONS MAY CHANGE FROM THE TIME OF THE SITE SURVEY UNTIL THE START OF CONSTRUCTION*

CONTRACTOR'S NAME: **Black & Veatch** WIRELESS USE AGREEMENT _____

WIRELESS SERVICE PROVIDER: AT&T CONTACT NAME: _____

OFFICE: _____ MOBILE: _____ FAX: _____

POLE LOCATION & ID: 2300 W. Sahara Ave TS: northwest corner of Sahara & Ranch/1-15 South

CIRCLE ONE : NEW POLE / EXISTING POLE

PROPOSED SERVICE INFORMATION

Service Location	2500 Ranch Dr.				ID# none		
Existing Meter #	CC030096565						
Existing Service Size		60 Amp		100 Amp		125 Amp	200 Amp
Street Light Circuit							
Service Type		Pedestal				Pole Mount	
Current Application		Traffic Signal		St. Lighting		Both	
Existing Load		60.0 Amps				Amps	
Field Tested By:	T. Azbill				Date:	05/23/2018	

Notes: Suitable for use to serve small cell site without upgrade.

CLV REPRESENTATIVE

- *TO BE COMPLETED BY TEFO STAFF*

CLV FIELD REVIEWER'S NAME: T. Azbill FIELD REVIEW DATE: 05/23/2018

SENIOR/SUPVERVISOR REVIEW SIGNATURE: 5/24/18 DATE REVIEWED BY SENIOR TECH: _____

BACKUP DOCUMENTATION

- *DRAWINGS, PHOTOS, ETC*

FILE NAME: _____ CREATION DATE: _____

FILE NAME: _____ CREATION DATE: _____

FILE NAME: _____ CREATION DATE: _____

Service Size _____ CREATION DATE: _____

NV POWER SERVICE ADDRESS

LOAD BAY DOCUMENTATION FOR SPACE UTILIZATION

Revised Tuesday, April 18, 2017