CITY OF LAS VEGAS STREETLIGHT NOTES

1. ALL STREET LIGHTING INSTALLATIONS SHALL BE IN ACCORDANCE WITH THE STREET LIGHTING PLANS, THE 'UNIFORM STANDARD SPECIFICATIONS FOR PUBLIC WORKS CONSTRUCTION OFF-SITE IMPROVEMENTS, CLARK COUNTY AREA, NEVADA', LATEST REVISION (USS), AND THE 'UNIFORM STANDARD DRAWINGS FOR PUBLIC WORKS CONSTRUCTION OFF-SITE IMPROVEMENTS, CLARK COUNTY AREA, NEVADA" (USD), LATEST REVISION.

2. DESIGN PROFESSIONAL AND CONTRACTOR SHALL VERIFY CITY'S LATEST LED FIXTURE SPECIFICATIONS AND APPROVED FIXTURES PER CLV WEBSITE, UNDER BUILDING AND SAFETY FORMS, PRIOR TO ORDERING MATERIALS.

3. NO DEVIATION OF STREET LIGHT, PULL BOX, CONDUITS (ETC.), LOCATIONS SHALL BE PERMITTED WITHOUT WRITTEN APPROVAL OF TRAFFIC AND CITY ENGINEER. ANY DEVIATION FROM THE PLAN LOCATION WILL REQUIRE COMPLIANCE WITH SECTION 623 OF THE USS.

4. ALL EXISTING STREET LIGHTING SHALL REMAIN OPERATIONAL DURING CONSTRUCTION IN ACCORDANCE WITH SECTION 623 G.03.01 OF THE USS..

5. ALL EMPTY CONDUIT SHALL HAVE AT LEAST ONE GREEN #8 AWG WIRE INSTALLED AS TRACER WIRE IN ACCORDANCE WITH SECTION 623 G.02.01 OF THE USS PRIOR TO BACKFILLING AND FINAL INSPECTION.

6. ANY STRUCTURE SUCH AS BLOCK WALLS, CHAIN LINK FENCES, RETAINING WALLS, ETC., SHALL LEAVE A MINIMUM CLEARANCE IN COMPLIANCE WITH THE USD NO. 320A. WHEN POLE IS INSTALLED BEHIND SIDEWALK, AND SHALL AT NO TIME COMPLETELY ENCLOSE THE STREET LIGHTING POLE.

7. AS-BUILT DRAWINGS SHALL BE SUPPLIED TO THE TRAFFIC ENGINEERING DIVISION PRIOR TO ANY PRE-FINAL INSPECTION. THE AS-BUILT DRAWING NEEDS TO BE STAMPED AS-BUILT AND SIGNED BY THE PREPARER.

8. SERVICE POINTS SHALL BE COORDINATED WITH NV ENERGY, AND WHEREVER POSSIBLE, BE LOCATED NEAR THE CENTER OF THE CIRCUIT. SERVICE POINTS SHALL BE SHOWN ON THE PLANS.

9. WHEREVER THERE IS AN OVERHEAD UTILITY THAT MAY CONFLICT WITH THE INSTALLATION OF STREET LIGHTING CIRCUITS AND/OR POLES, THESE CONFLICTS MUST BE RESOLVED BETWEEN THE DEVELOPER AND THE UTILITIES INVOLVED BEFORE STREETLIGHT BASES ARE INSTALLED. AT NO EXPENSE TO THE CITY OF LAS VEGAS.

10. THE CONTRACTOR SHALL FURNISH COMPLETE CONDUIT, WIRE, ETC. FROM SERVICE TO TRANSFORMERS AND CONTROL SYSTEMS IF REQUIRED ON PLANS.

11. THE DEVELOPER/OWNER WILL BE REQUIRED TO SUPPLY POWER TO ALL NEW PUBLIC STREET LIGHTS INSTALLED UNDER THIS DESIGN PRIOR TO BOND RELEASE OR PROJECT COMPLETION. THE DEVELOPER/OWNER WILL BE RESPONSIBLE FOR ALL ITEMS ASSOCIATED WITH THE INSTALLATION, CONSTRUCTION, ENERGIZING, MAINTENANCE AND OPERATIONAL COST OF SAID STREET LIGHTS PRIOR TO PROJECT COMPLETION. REFER TO THE PLAN FOR ANY NEW SERVICE REQUIREMENTS. THE TRANSFER OF OWNERSHIP FROM THE DEVELOPER/OWNER TO THE CITY OF LAS VEGAS FOR ALL NEW PUBLIC STREET LIGHT/S AND/OR SERVICE/S INSTALLED UNDER THIS PLAN DESIGN WILL BE IN CONJUNCTION WITH THIS PROJECT COMPLETION. COORDINATE ALL MAINTENANCE AND OPERATIONAL TRANSFERS WITH THE CITY OF LAS VEGAS TRAFFIC ENGINEERING DEPARTMENT (TEFO) AT (702) 229-6331.

REVISED 06/04/2018

CITY OF LAS VEGAS GRADING NOTES

1. IN THE EVENT THAT ANY UNFORESEEN CONDITIONS NOT COVERED BY THESE NOTES ARE ENCOUNTERED DURING GRADING OPERATIONS, THE OWNER/ENGINEER SHALL BE IMMEDIATELY NOTIFIED FOR DIRECTION.

2. IT SHALL BE THE RESPONSIBILITY OF THE CONTRACTOR TO PERFORM ALL NECESSARY CUTS AND FILLS WITHIN THE LIMITS OF THIS PROJECT AND THE RELATED OFF-SITE WORK, SO AS TO GENERATE THE DESIRED SUBGRADE, FINISH GRADES AND SLOPES SHOWN.

3. CONTRACTOR SHALL TAKE FULL RESPONSIBILITY FOR ALL EXCAVATION. ADEQUATE SHORING SHALL BE DESIGNED AND PROVIDED BY THE CONTRACTOR TO PREVENT UNDERMINING OF ANY ADJACENT FEATURES OR FACILITIES AND/OR CAVING OF THE EXCAVATION.

4. THE CONTRACTOR IS WARNED THAT AN EARTHWORK BALANCE WAS NOT NECESSARILY THE INTENT OF THIS PROJECT. ANY ADDITIONAL MATERIAL REQUIRED OR LEFTOVER MATERIAL FOLLOWING EARTHWORK OPERATIONS BECOMES THE RESPONSIBILITY OF THE CONTRACTOR.

5. THE GRADING CONTRACTOR IS RESPONSIBLE TO COORDINATE WITH THE OWNER TO PROVIDE FOR THE REQUIREMENTS OF THE PROJECT STORM WATER POLLUTION PREVENTION PLAN (SWPPP) AND ASSOCIATED PERMIT.

6. CONTRACTOR SHALL GRADE TO THE LINES AND ELEVATIONS SHOWN ON THE PLANS WITHIN THE FOLLOWING HORIZONTAL AND VERTICAL TOLERANCES AND DEGREES OF COMPACTION, IN THE AREAS INDICATED:

	HORIZONTAL	VERTICAL	COMPACTION
A. PAVEMENT AREA SUBGRADE	0.1'+	+0.0'TO −0.1'	SEE SOILS REPORT
B. ENGINEERED FILL	0.5'+	+0.1'TO −0.1'	SEE SOILS REPORT

COMPACTION TESTING WILL BE PERFORMED BY THE OWNER OR HIS REPRESENTATIVE.

7. ALL CUT AND FILL SLOPES SHALL BE PROTECTED UNTIL EFFECTIVE EROSION CONTROL HAS BEEN ESTABLISHED.

8. THE USE OF POTABLE WATER WITHOUT A SPECIAL PERMIT FOR BUILDING OR CONSTRUCTION PURPOSES INCLUDING CONSOLIDATION OF BACKFILL OR DUST CONTROL IS PROHIBITED. THE CONTRACTOR SHALL OBTAIN ALL NECESSARY PERMITS FOR CONSTRUCTION WATER.

9. THE CONTRACTOR SHALL MAINTAIN THE STREETS, SIDEWALKS AND ALL OTHER PUBLIC RIGHT-OF-WAY IN A CLEAN, SAFE AND USABLE CONDITION. ALL SPILLS OF SOIL, ROCK OR CONSTRUCTION DEBRIS SHALL BE PROMPTLY REMOVED FROM THE PUBLICLY OWNED PROPERTY DURING CONSTRUCTION AND UPON COMPLETION OF THE PROJECT. ALL ADJACENT PROPERTY, PRIVATE OR PUBLIC SHALL BE MAINTAINED IN A CLEAN, SAFE AND USABLE CONDITION.

10. IN THE EVENT THAT ANY TEMPORARY CONSTRUCTION ITEM IS REQUIRED THAT IS NOT SHOWN ON THESE DRAWINGS, THE OWNER AGREES TO PROVIDE AND INSTALL SUCH ITEM AT HIS OWN EXPENSE AND AT THE DIRECTION OF THE CITY ENGINEER. TEMPORARY CONSTRUCTION INCLUDES DITCHES, BERMS, ROAD SIGNS AND BARRICADES, ETC.

REVISED 04/15/10

CITY OF LAS VEGAS SEWER NOTES

1. ALL CONSTRUCTION AND MATERIALS SHALL BE IN ACCORDANCE WITH THE LATEST EDITION OF THE DESIGN AND CONSTRUCTION STANDARDS FOR WASTEWATER COLLECTION SYSTEMS AND THE UNIFORM STANDARD SPECIFICATIONS FOR PUBLIC WORKS' CONSTRUCTION OFF-SITE IMPROVEMENTS, CLARK COUNTY AREA, NEVADA, AS AMENDED. IT WILL BE THE RESPONSIBILITY OF THE CONTRACTOR TO BE AWARE OF THE CONTENTS OF THE ABOVE SPECIFICATIONS.

2. IT SHALL BE THE CONTRACTOR'S RESPONSIBILITY TO PERFORM CONSTRUCTION AS PER PLANS. ANY ADDITIONS, DELETIONS, OR CHANGES SHALL FIRST MEET WITH THE APPROVAL OF THE CITY ENGINEER.

3. CHISEL 'S" OR 'G" IN CURBS WHERE SEWER OR GAS LATERALS PASS UNDER THE CURB.

4. POLYVINYL (PVC) SEWER PIPE SHALL MEET ASTM D-3034 SDR 35 SPECIFICATIONS, INSTALLED WITH SAND BEDDING AND BACKFILL OF TYPE II AGGREGATE BASE.

5. ALL MANHOLES PAVED IN STREETS EIGHTY (80') FOOT R/W AND LARGER SHALL HAVE CONCRETE COLLARS. STREETS LESS THAN EIGHTY (80') FOOT R/W WILL REQUIRE RETROFIT IF PAVING DOES NOT CONFORM TO CITY STANDARDS AT THE MANHOLE.

6. TEE SADDLES SHALL BE USED TO CONNECT SEWER LATERALS TO EXISTING MAIN LINES UP TO TWELVE INCH (12") DIAMETER. CONNECTIONS TO FIFTEEN INCH (15") OR LARGER MAINS SHALL REQUIRE SPECIAL PROCEDURES. IN LINE 'Y'S SHALL BE USED ON LINES TWELVE INCHES (12") OR ABOVE.

7. WATER MAINS SHALL BE PROTECTED IN ACCORDANCE WITH LVVWD STANDARDS WHENEVER A SEWER MAIN CROSSES OVER A WATER MAIN OR THE SEWER IS LESS THAN EIGHTEEN INCH (18") UNDER A WATER MAIN.

8. ALL CONTRACTORS INSTALLING SEWER MAINS THAT WILL BE UNDER THE JURISDICTION OF THE CITY OF LAS VEGAS MUST BE STATE OF NEVADA CLASS 'A' CONTRACTORS.

9. THE CITY OF LAS VEGAS WILL NOT ACCEPT ANY SEWER MAINS WHICH HAVE A VERTICAL DEFLECTION OF MORE THAN ONE TENTH (0.1) OF A FOOT FROM THE APPROVED CONSTRUCTION PLANS AT ANY LOCATION. SEWER MAINS FOUND TO EXCEED THIS TOLERANCE WILL HAVE TO BE REPAIRED OR REMOVED OR REPLACED TO THE SATISFACTION OF THE CITY ENGINEER PRIOR TO ACCEPTANCE BY THE CITY OF LAS VEGAS.

10. INSTALLATION OF CURVED SEWER REQUIRES THE USE OF C-900 PIPE WHICH ALLOWS FOR PIPE DEFLECTION AT THE JOINTS.

REVISED 04/15/10

CITY OF LAS VEGAS FIRE DEPARTMENT NOTES

1. ALL WORK SHALL BE DONE IN STRICT ACCORDANCE WITH THE LAS VEGAS FIRE & RESCUE ADOPTED FIRE CODE ORDINANCE #6325 FOR HYDRANT SPECIFICATIONS AND HYDRANT INSTALLATION SPECIFICATIONS.

2. ONLY FIRE HYDRANTS THAT ARE ON THE LAS VEGAS VALLEY WATER DISTRICT'S – APPROVED PRODUCTS LIST ARE ALLOWED TO BE INSTALLED.

3. A PERMIT IS REQUIRED FROM LAS VEGAS FIRE & RESCUE FOR THE INSTALLATION OF ON-SITE WATER LINES AND FIRE HYDRANTS. THE PERMIT AND CONTRACTORS MATERIAL TEST CERTIFICATE FOR UNDERGROUND PIPING FORM SHALL BE OBTAINED FROM THE FIRE PROTECTION ENGINEER BEFORE COMMENCEMENT OF WORK. [IFC § 105.7.12]

4. ON ANY RESIDENTIAL OR COMMERCIAL INSTALLATIONS, FIRE HYDRANTS SHALL BE INSTALLED AND FIRE APPARATUS ACCESS ROADS SHALL BE MAINTAINED BEFORE COMMENCEMENT OF ANY COMBUSTIBLE CONSTRUCTION. ALL FIRE HYDRANTS SHALL BE IN GOOD WORKING ORDER AND SHALL BE CAPABLE OF DELIVERING THE REQUIRED FIRE FLOW. [IFC § 3310, § 3312]

5. TO IDENTIFY THE FIRE HYDRANT LOCATIONS, THE CONTRACTOR SHALL PLACE A BLUE REFLECTIVE MARKER AT THE CENTER LINE OF STREET ADJACENT TO THE FIRE HYDRANTS. [IFC § 507.5.7.3]

6. ALL UNDERGROUND INSPECTIONS, PRESSURE AND FLUSH VERIFICATIONS OF ALL FIRE HYDRANTS AND FIRE LINES, SHALL BE CONDUCTED BEFORE COVERING THE LINES. CENTER LOADING IS ACCEPTABLE FOR THE HYDRO TESTS WITH PRIOR FIRE PREVENTION APPROVAL. [IFC § 106.3]

7. ALL ON-SITE UNDERGROUND WATER MAINS AND MATERIALS SHALL BE U.L. LISTED A.W.W.A. APPROVED AND SHALL BE RATED FOR THE APPROPRIATE WORKING PRESSURE. [IFC § 507.2.1, NFPA 24]

8. PAINTING OF CURBS, FIRE HYDRANTS, PADS, PROTECTION OF FIRE HYDRANTS FROM PHYSICAL DAMAGE, AND ALL OTHER WORK NECESSARY PER PLANS SHALL BE COMPLETED BEFORE APPROVAL BY LAS VEGAS FIRE AND RESCUE, FIRE PREVENTION DIVISION. [IFC § 507]

9. PRIVATE HYDRANTS SHALL BE PAINTED RED. [IFC § 507.5.7.1]

10. PRIOR TO THE FINAL OCCUPANCY, A FIRE FLOW TEST SHALL BE WITNESSED BY LAS VEGAS FIRE AND RESCUE, FIRE PREVENTION DIVISION TO VERIFY AVAILABILITY OF THE REQUIRED FIRE FLOW. [IFC § 507]

11. FIRE HYDRANT SPACING SHALL BE AS FOLLOWS: [IFC § C102]
RESIDENTIAL – 500 FEET UNSPRINKLERED; 600 FEET SPRINKLERED.
COMMERCIAL – 300 FEET UNSPRINKLERED; 400 FEET SPRINKLERED.

12. WHERE THE WATER MAINS ARE EXTENDED ALONG STREETS OR NEW STREETS ARE INSTALLED WHERE FIRE HYDRANTS ARE NOT NEEDED FOR PROTECTION OF STRUCTURES, FIRE HYDRANTS SHALL BE INSTALLED AT A MAXIMUM OF 1000 FT SPACING, TO PROVIDE FOR TRANSPORTATION HAZARDS. WHERE STREETS ARE PROVIDED WITH MEDIAN DIVIDERS OR HAVE FOUR (4) OR MORE TRAFFIC LANES AND HAVE A TRAFFIC COUNT OF MORE THAN 30,000 PER DAY, HYDRANTS ARE REQUIRED ON EACH SIDE OF THE STREET SPACED AT 500 FT ON AN ALTERNATING BASIS. [IFC § C102.8]

13. NO FIRE HYDRANTS SHALL BE LOCATED WITHIN THE RADIUS OF A CUL-DE-SAC OR WITHIN 20 FT OF THE PERIMETER OF THE RADIUS OF THE CUL-DE-SAC.

14. NO FIRE HYDRANTS SHALL BE LOCATED WITHIN 6 FT OF ANY CURB RETURN, DRIVEWAY, POWER POLE, STREETLIGHT OR ANY OTHER OBSTRUCTION. [IFC § C102.12]

15. A MAXIMUM DISTANCE FROM A FIRE HYDRANT TO A ONE-TWO FAMILY DWELLING SHALL NOT EXCEED 300 FT, AS MEASURED BY AN APPROVED ROUTE. [IFC § C102.4]

16. THE MAXIMUM DISTANCE FROM A FIRE HYDRANT TO A FIRE DEPARTMENT CONNECTION (FDC) SHALL NOT EXCEED 100 FT, AS MEASURED BY AN APPROVED ROUTE. [IFC § C102.7]

17. THE MAXIMUM DISTANCE FROM A HYDRANT TO THE END OF A DEAD-END STREET SHALL NOT EXCEED 200 FT. [IFC § C102.6]

18. TWO (2) SOURCES OF SUPPLY ARE REQUIRED WHENEVER THERE IS 4 OR MORE FIRE HYDRANTS/SPRINKLER LEAD-INS ARE INSTALLED ON A SINGLE SYSTEM. SECTIONAL CONTROL VALVES SHALL BE INSTALLED SO THAT NO MORE THAN 2 FIRE HYDRANTS CAN BE OUT OF SERVICE DUE TO A BREAK IN A WATER MAIN. [IFC § C104]

19. ALL FIRE APPARATUS ACCESS ROADS SHALL BE PAVED TO PROVIDE ALL-WEATHER DRIVING CAPABILITIES, AND SHALL BE DESIGNED AND MAINTAINED TO SUPPORT THE IMPOSED LOADS OF THE FIRE APPARATUS. [IFC § 503.2.3]

20. THE GRADIENT FOR THE FIRE APPARATUS ROADS SHALL NOT EXCEED 12%. ANGLES OF APPROACH AND ANGLES OF DEPARTURE SHALL NOT EXCEED 6% FOR 25 FT PRIOR TO OR AFTER THE GRADE CHANGE. ADJACENT TO THE STRUCTURES GRADIENT SHALL NOT EXCEED 6%. [IFC § 503.2.7, § 503.2.8]

21. THE TURNING RADIUS OF THE FIRE APPARATUS ACCESS ROADS SHALL BE NO LESS THAN 52 FT OUTSIDE AND 28 FT INSIDE TURNING RADIUS. [IFC § 503.2.4]

22. VERTICAL CLEARANCE OF ALL FIRE APPARATUS ACCESS ROADS SHALL NOT BE LESS THAN 13 FT 6 INS. [IFC § 503.2.1]

23. FIRE DEPARTMENT ACCESS ROADS SHALL HAVE A MINIMUM UNOBSTRUCTED WIDTH OF NOT LESS THAN 40 FT FLOW LINE TO FLOW LINE WITH PARALLEL PARKING PERMITTED ON BOTH SIDES. NOT LESS THAN 32 FT WIDE, FLOW-LINE TO FLOW-LINE, WHERE PARKING IS PERMITTED ONLY ON ONE SIDE OF THE FIRE APPARATUS ACCESS ROAD. NOT LESS THAN 24 FT WIDE, FLOW-LINE TO FLOW-LINE, WHERE NO PARKING IS PERMITTED ON EITHER SIDE. FIRE LANES THROUGH PARKING LOTS SHALL NOT BE LESS THAN 24 FT. [IFC § 503.2.1.1]

24. FIRE APPARATUS ACCESS ROAD SHALL BE REQUIRED WHEN ANY PORTION OF AN EXTERIOR WALL OF THE FIRST STORY IS LOCATED MORE THAN 150 FT FROM A FIRE DEPARTMENT VEHICLE ACCESS. THIS DISTANCE COULD BE INCREASED TO 250 FT IF THE BUILDING IS SPRINKLERED. [IFC § 503.1.1]

25. APPROVED SECONDARY FIRE APPARATUS ACCESS SHALL BE PROVIDED FOR 100 OR MORE DWELLING UNITS, ROAD(S) WITH DEAD-ENDS OR WITH A SINGLE POINT OF ACCESS IN EXCESS OF 600 FT. COMMERCIAL AND INDUSTRIAL DEVELOPMENTS WHERE BUILDINGS EXCEED 2 STORIES OR 30 FT IN HEIGHT, OR EXCEEDING 62,000 SQ FT IN AREA. [IFC § 503.1.2]

26. ALL DEAD-END FIRE APPARATUS ROADS AND/OR FIRE LANES, PUBLIC OR PRIVATE, IN EXCESS OF 150 FT IN LENGTH SHALL BE PROVIDED WITH AN APPROVED TURN AROUND HAVING A MINIMUM DIAMETER OF 81 FT. [IFC § 503.2.5]

27. ALL FIRE APPARATUS ACCESS ROADS SHALL BE MARKED BY PLACING APPROVED SIGNS AT THE START OF THE DESIGNATED FIRE LANE, ONE SIGN AT THE END OF THE FIRE LANE AND WITH SIGNS AT INTERVALS OF 100 FT ALONG THE DESIGNATED FIRE LANES. SIGNS TO BE PLACES ON BOTH SIDES OF AN ACCESS ROADWAY IF NEEDED TO PREVENT PARKING ON EITHER SIDE. SIGNS TO BE INSTALLED NO HIGHER THAN 10FT OR LESS THAN 6 FT FROM THE ROADWAY LEVEL. THE CURB ALONG OR ON THE PAVEMENT OR CEMENT (IF NO CURB IS PROVIDED) SHALL BE PAINTED WITH RED WEATHER RESISTANT PAINT IN ADDITION TO THE SIGNS. [IFC § 503.3]

28. ELECTRONICALLY CONTROLLED ACCESS GATES SHALL BE PROVIDED WITH AN APPROVED EMERGENCY VEHICLE DETECTOR/RECEIVER SYSTEM. SAID SYSTEM SHALL BE INSTALLED IN ACCORDANCE WITH THE IFC § 503.6 AND IFC APPENDIX M.

EFFECTIVE DATE 03-01-2016

DEVIATIONS FROM STANDARDS

NONE.

CITY OF LAS VEGAS GENERAL NOTES

1. ALL CONSTRUCTION AND MATERIALS SHALL BE IN ACCORDANCE WITH THE 'UNIFORM STANDARD SPECIFICATIONS FOR PUBLIC WORKS CONSTRUCTION OFF-SITE IMPROVEMENTS, CLARK COUNTY AREA NEVADA', LATEST ISSUE; THE 'UNIFORM STANDARD DRAWINGS FOR PUBLIC WORKS CONSTRUCTION, CLARK COUNTY AREA NEVADA', LATEST REVISED EDITION; THE 'SUMMERLIN IMPROVEMENT STANDARDS" FOR WORK IN THE SUMMERLIN AREA; AND OTHER APPLICABLE APPROVED STANDARDS ISSUED BY THE CONTROLLING AGENCY; THE UNIFORM BUILDING CODE; AND ALL LOCAL CITY CODES AND ORDINANCES APPLICABLE, EXCEPT AS NOTED ON THIS SHEET AS 'DEVIATIONS FROM STANDARDS'.

2. THE EXISTENCE AND LOCATION OF ANY OVERHEAD OR UNDERGROUND UTILITY LINES, PIPES, OR STRUCTURES SHOWN ON THESE PLANS ARE OBTAINED BY A RESEARCH OF THE AVAILABLE RECORDS. EXISTING UTILITIES AS SHOWN FROM CLV PLANS LIBRARY ARE APPROXIMATE AND FOR RECORD PURPOSES. EXISTING UTILITIES ARE LOCATED ON PLANS ONLY FOR THE CONVENIENCE OF THE CONTRACTOR. EXISTING UTILITY SERVICE LATERALS MAY NOT BE SHOWN ON THE PLANS. THE CONTRACTOR SHALL, AT HIS OWN EXPENSE, LOCATE ALL UNDERGROUND AND OVERHEAD INTERFERENCE'S WHICH MAY AFFECT HIS OPERATION DURING CONSTRUCTION AND SHALL TAKE ALL NECESSARY PRECAUTIONS TO AVOID DAMAGE TO SAME. THE CONTRACTOR SHALL USE EXTREME CAUTION WHEN WORKING NEAR OVERHEAD UTILITIES SO AS TO SAFELY PROTECT ALL PERSONNEL AND EQUIPMENT, AND SHALL BE RESPONSIBLE FOR ALL COST AND LIABILITY IN CONNECTION THEREWITH.

3. THE CONTRACTOR SHALL TAKE ALL PRECAUTIONARY MEASURES NECESSARY TO PROTECT EXISTING UTILITY LINES, STRUCTURES AND STREET IMPROVEMENTS WHICH ARE TO REMAIN IN PLACE, FROM DAMAGE, AND ALL SUCH IMPROVEMENTS OR STRUCTURES DAMAGED BY THE CONTRACTOR'S OPERATIONS SHALL BE REPAIRED OR REPLACED SATISFACTORY TO THE CITY ENGINEER AND OWNING UTILITY COMPANY AT THE EXPENSE OF THE CONTRACTOR.

4. ALL CONSTRUCTION SHALL BE AS SHOWN ON THESE PLANS, ANY REVISIONS SHALL HAVE THE PRIOR WRITTEN APPROVAL OF THE CITY ENGINEER.

5. TYPE V CEMENT SHALL BE USED IN ALL OFF-SITE CONCRETE WORK. CONCRETE TO BE 3000 P.S.I. MINIMUM @ 28 DAYS. MIX DESIGNS TO BE APPROVED BY THE CITY, PRIOR TO THE USE ON THE PROJECT.

6. PERMITS ARE REQUIRED FOR ANY WORK IN THE PUBLIC RIGHT-OF-WAY. THE CONTRACTOR SHALL SECURE ALL PERMITS AND INSPECTIONS REQUIRED FOR THIS CONSTRUCTION.

7. EXPANSION JOINTS REQUIRED, MAXIMUM EVERY 300'IN EXTRUDED-TYPE CURB.

8. AC PAVEMENT TO BE ONE-HALF INCH (½") ABOVE LIP OF ALL GUTTERS AFTER COMPACTION, EXCEPT AT SIDEWALK RAMPS AND CROSS GUTTERS.

9. CURB AND GUTTER FOUND TO BE UNACCEPTABLE TO THE CITY OF LAS VEGAS SHALL BE REMOVED AND REPLACED PER STANDARD DRAWING 216.

10. SIDEWALK RAMPS SHALL BE CONSTRUCTED IN EACH QUADRANT OF AN INTERSECTION PER STANDARD DRAWING 235. EXACT LOCATION OF RAMPS MAY BE ADJUSTED IN THE FIELD BY A CITY INSPECTOR.

11. CONTRACTOR SHALL PROVIDE ALL NECESSARY HORIZONTAL AND VERTICAL TRANSITIONS BETWEEN NEW CONSTRUCTION AND EXISTING SURFACES TO PROVIDE FOR PROPER DRAINAGE AND FOR INGRESS AND EGRESS TO NEW CONSTRUCTION. THE EXTENT OF THE TRANSITIONS TO BE AS SHOWN ON PLANS.

12. ALL GRADING WORK SHALL CONFORM TO THE SOILS REPORT AS PREPARED BY THE (COMPANY , _ REPORT #, DATE) APPROVED BY THE CITY ENGINEER, AND AS SHOWN ON THESE PLANS.

13. EXACT LOCATION OF ALL SAWCUT LINES MAY BE ADJUSTED OR DETERMINED IN THE FIELD BY A CITY OF LAS VEGAS ENGINEER IF LOCATION ON PLANS IS NOT CLEARLY SHOWN, OR EXISTING PAVEMENT CONDITION REQUIRES RELOCATIONS.

14. THE CONTRACTOR SHALL TAKE ALL PRECAUTIONS NECESSARY TO PROTECT EXISTING PERMANENT SURVEY MONUMENTS. ANY MONUMENTS DISTURBED SHALL BE REPLACED AND ADJUSTED PER AVAILABLE RECORDS IN ACCORDANCE WITH N.R.S. STATUTE NO. 625.380 & CITY OF LAS VEGAS TITLE 18, APPENDIX D.

15. UTILITY COMPANY METER BOXES, MANHOLE LIDS, VALVE COVERS, ETC., SHALL BE LOCATED OUT OF DRIVEWAYS, DRIVEWAY APRONS, FLOWLINES, AND CROSS GUTTERS UNLESS WRITTEN APPROVAL IS GRANTED BY THE UTILITY COMPANY AND THE CITY ENGINEER.

WALL NOTES:
16. ALL WALLS, NEW OR EXISTING, ARE ONLY SHOWN ON CIVIL PLANS FOR THE PURPOSE OF REVIEWING GRADING RELATIONSHIPS; FLOOD CONTROL AND SIGHT DISTANCE AT INTERSECTIONS. NEW WALLS REQUIRE A SEPARATE PERMIT AND INSPECTION BY THE BUILDING DEPARTMENT.

17. ASPHALT MIX DESIGN MUST BE SUBMITTED AND APPROVED BY THE CITY ENGINEER PRIOR TO THE PLACEMENT OF ASPHALT WITHIN CITY RIGHT OF WAY.

18. CONTRACTOR SHALL ADJUST ALL NEW AND EXISTING INLETS, VALVE BOXES, MANHOLE RIMS, AND SEWER CLEAN OUTS, ETC. TO FINISH GRADE AS APPLICABLE WHETHER OR NOT THEY ARE SHOWN ON THE PLANS.

19. MATERIALS, HANDLING AND PLACEMENT OF PORTLAND CEMENT CONCRETE SHALL BE IN ACCORDANCE WITH APPLICABLE SECTIONS OF NDOT OR THE CLARK COUNTY AREA SPECIFICATIONS (AS APPLICABLE) AND THE PLANS AND DETAILS SHOWN HEREON.

20. WHEN INSTALLING UNDERGROUND FACILITIES THAT REQUIRE UNDERGROUND LOCATING DEVICES SUCH AS MARKER BALLS, LOCATING RIBBON, ETC, THE CONTRACTOR SHALL PROVIDE WRITTEN DOCUMENTATION TO OFFSITE INSPECTION AND TESTING CERTIFYING THAT ALL DEVICES HAVE BEEN PLACED AND VERIFIED TO BE IN GOOD WORKING CONDITION PRIOR TO THE CONSTRUCTION OF ANY ROAD BASE.

21. AFTER HAUNCHING AND PRIOR TO BACKFILL OPERATIONS WHICH WOULD COVER SANITARY SEWER AND STORM DRAIN FACILITIES, CONTRACTOR IS REQUIRED TO SCHEDULE CLV OPEN-TRENCH UTILITY SURVEY INSPECTION FOR DETERMINATION OF FINAL LOCATION COORDINATES. FACILITIES TO BE LOCATED BY CLV SHALL INCLUDE AT A MINIMUM THE HORIZONTAL AND VERTICAL (INVERT) LOCATION OF PUBLIC SEWER MANHOLES, STORM DRAIN MANHOLES AND TRANSITION STRUCTURES, STORM DRAIN LATERALS AT THE CONNECTION TO THE STORM DRAIN MAIN AND AT THE CONNECTION TO A DROP INLET, THE CONNECTION OF SEWER SERVICE LATERALS TO THE SEWER MAIN AND WHERE THE SEWER SERVICE LATERALS EXIT THE PUBLIC RIGHT-OF-WAY, SEWER AND STORM DRAIN MAIN ALIGNMENT, INCLUDING DEFLECTION POINTS.

22. CCTV VIDEO INSPECTION IS REQUIRED FOR ALL SEWER AND STORM DRAINS. THE CCTV VIDEO INSPECTIONS NEED TO BE PERFORMED PER THE DESIGN AND CONSTRUCTION STANDARDS FOR WASTEWATER COLLECTION SYSTEMS LATEST EDITION.

23. A SEPARATE BORING PERMIT IS REQUIRED FOR ALL BORING ACTIVITIES.

REVISED 06/04/2018

SOUTHERN NEVADA - SOUTHWEST GAS CORPORATION GENERAL NOTES:

1. IN THE EVENT OF NATURAL GAS EMERGENCIES CALL 911 AND 1-877-860-6020.
2. THERE SHALL BE A MINIMUM HORIZONTAL AND VERTICAL CLEARANCE OF 12-INCHES BETWEEN NATURAL GAS FACILITIES AND ANY UNDERGROUND FACILITIES AND/OR STRUCTURES, INCLUDING BUT NOT LIMITED TO WATER, SEWER, STORM DRAIN, COMMUNICATIONS, AND ELECTRIC.
3. FOR VALVE ADJUSTMENT CONTACT 702-668-6107 48 HOURS PRIOR TO CONSTRUCTION..
4. IN THE EVENT OF A NATURAL GAS CONFLICT WITH PROPOSED UTILITIES AND/OR STRUCTURES CONTACT 702-365-2099.

ALL CIVIL IMPROVEMENT PLANS MUST INCLUDE SOUTHWEST GAS CORPORATION HIGH PRESSURE NOTES ON THE NOTES SHEET AND ALL SHEETS DEPICTING HIGH PRESSURE NATURAL GAS MAINS AS INDICATED BELOW:

CAUTION: HIGH PRESSURE GAS!!
CALL SOUTHWEST GAS AT 702-400-1789 FOR STANBY WHEN EXCAVATING OVER OR NEAR HIGH PRESSURE GAS LINES 48 HOURS PRIOR TO CONSTRUCTION.

CITY OF LAS VEGAS TRAFFIC NOTES

1. ALL CONSTRUCTION SIGNING, BARRICADING, AND TRAFFIC DELINEATION SHALL CONFORM TO THE "MANUAL ON UNIFORM TRAFFIC CONTROL DEVICES", LATEST EDITION.

2. THE STREET SIGN CONTRACTOR SHALL OBTAIN STREET NAMES AND BLOCK NUMBERING FROM THE PLANNING DEPARTMENT PRIOR TO CONSTRUCTION.

3. BEFORE ANY WORK IS STARTED IN THE RIGHT-OF-WAY, THE CONTRACTOR SHALL INSTALL ALL ADVANCE WARNING SIGNS FOR THE CONSTRUCTION ZONE. THE CONTRACTOR SHALL INSTALL TEMPORARY STOP SIGNS AT ALL NEW STREET ENCROACHMENTS INTO EXISTING CITY STREETS WHERE WARRANTED IMMEDIATELY AFTER FIRST GRADING WORK IS ACCOMPLISHED, AND SHALL MAINTAIN SAID SIGNS UNTIL PERMANENT SIGNS ARE INSTALLED.

4. WHEN A DESIGNATED "SUGGESTED ROUTE TO SCHOOL" IS ENCROACHED UPON BY A CONSTRUCTION WORK ZONE AND PUBLIC WORKS STAFF IDENTIFIES A NEED FOR STUDENTS TO BE ASSISTED IN THE SAFE CROSSING THROUGH THAT WORK ZONE, THE CONTRACTOR SHALL BE REQUIRED TO PROVIDE A QUALIFIED "CROSSING GUARD". THE GUARD SHALL BE PRESENT FOR THE FULL DURATION OF TIME THAT CHILDREN ARE LIKELY TO BE PRESENT.

5. IF THE IMPROVEMENTS NECESSITATE THE OBLITERATION, TEMPORARY OBSTRUCTION, TEMPORARY REMOVAL OR RELOCATION OF ANY EXISTING TRAFFIC PAVEMENT MARKING, SUCH PAVEMENT MARKING SHALL BE RESTORED OR REPLACED WITH LIKE MATERIALS TO THE SATISFACTION OF THE CITY TRAFFIC ENGINEER.

6. THE CONTRACTOR SHALL BE RESPONSIBLE FOR PROVIDING AND INSTALLING ALL PERMANENT SIGNS SHOWN ON THE PLANS. ALL NEW TRAFFIC SIGNS SHALL UTILIZE TYPE XI RETROREFLECTIVE SHEETING IN ACCORDANCE WITH CCAUSS 627 AND 716 AND SHALL HAVE AN ANTI-GRAFFITI PROTECTIVE OVERLAY FILM THAT IS A MATCHING COMPONENT TO, ANBD OF THE SAME MANUFACTURER AS RETROREFLECTIVE SHEETING TO WHICH IT IS APPLIED. STREET NAME SIGNS SHALL CONFORM IN THEIR ENTIRETY TO CURRENT CITY STANDARDS. ALL OTHER SIGNS SHALL BE STANDARD SIZE UNLESS OTHERWISE SPECIFIED ON THE PLANS. ALL SIGN POSTS SHALL BE INSTALLED IN ACCORDANCE WITH THE CURRENT CITY STANDARDS.

7. WHEN A PROPOSED STREET LIGHT STANDARD IS LOCATED WITHIN FIVE (5') FEET OF ANY PROPOSED SIGN SHOWN ON THE PLANS TO BE MOUNTED ON A SIGNPOST, THE SIGN SHALL BE MOUNTED ON THE STREET LIGHT STANDARD AND THE SIGNPOST SHALL BE ELIMINATED.

8. ALL PERMANENT TRAFFIC CONTROL DEVICES CALLED FOR HEREON SHALL BE IN PLACE AND IN FINAL POSITION PRIOR TO ALLOWING ANY PUBLIC TRAFFIC ONTO THE PORTIONS OF THE ROAD(S) BEING IMPROVED HERE UNDER, REGARDLESS OF THE STATUS OF COMPLETION OF PAVING OR OTHER OFF-SITE IMPROVEMENTS CALLED FOR BY THESE PLANS.

9. STREET SIGNS AND STOPS SIGNS SHALL BE INSTALLED PER CITY STANDARD SPECIFICATIONS FOR PLACEMENT OF STREET NAME SIGNS.

10. THE CONTRACTOR SHALL PROVIDE ALL NECESSARY TRAFFIC CONTROL DEVICES AND FLAGGERS TO INSURE THE SAFETY OF THE PUBLIC IN OR AROUND THE WORK AREA. THE CONTRACTOR SHALL HAVE A CERTIFIED ATSSA TRAFFIC CONTROL TECHNICIAN OR IMSA WORK ZONE SAFETY SPECIALIST SET UP, MAINTAIN AND/OR REMOVE ALL TRAFFIC CONTROL DEVICES IN THE CITY OF LAS VEGAS RIGHT OF WAY.

11. WORK IN PUBLIC STREETS, ONCE BEGUN, SHALL BE EXPEDITED TO COMPLETION SO AS TO PROVIDE MINIMUM INCONVENIENCE TO ADJACENT PROPERTY OWNERS AND TO THE TRAVELING PUBLIC.

12. THE CONTRACTOR SHALL BE RESPONSIBLE FOR NOTIFYING REGIONAL TRANSPORTATION COMMISSION OF SOUTHERN NEVADA (RTC). IF THE CONSTRUCTION INTERRUPTS OR RELOCATES A BUS STOP OR HAS AN ADVERSE EFFECT ON BUS SERVICE ON THAT STREET TO ARRANGE FOR TEMPORARY RELOCATION OF STOP.

13. GUARDS SHALL BE OBTAINED BY CONTACTING THE METROPOLITAN POLICE DEPARTMENT SPECIAL EVENTS UNIT (PHONE # 828-3442) WHO WILL PROVIDE OFFICERS PROPERLY TRAINED IN TRAFFIC CONTROL. FEES FOR THE USE OF THESE OFFICERS SHALL BE SET BY METRO AND WILL BE PAID BY THE CONTRACTOR. THE CONTRACTOR IS RESPONSIBLE FOR ALL ARRANGEMENTS WITH METRO.

14. ANY WORK WITHIN 300' OF A SIGNALIZED INTERSECTION WILL BE NIGHT WORK, UNLESS OTHERWISE DIRECTED BY THE CITY OF LAS VEGAS TRAFFIC ENGINEER.

15. THE CONTRACTOR SHALL CONTACT THE TRAFFIC ENGINEERING DIVISION (TRANSPORTATION SECTION) THROUGH THE PROJECT'S OFFSITE INSPECTOR PRIOR TO INITIATING PAVING TO RECEIVE DIRECTION FOR ANY PERMANENT OR TEMPORARY MODIFICATIONS TO THE APPROVED DRAWINGS REGARDING FINAL PAVEMENT TRANSITIONS, MARKINGS AND SIGNING THAT ARE REQUIRED TO MATCH ADJACENT ROADWAY SEGMENTS. THE CONTRACTOR SHALL PROVIDE A DRAWING FOR APPROVAL BY THE TRAFFIC ENGINEERING DIVISION DEPICTING ANY ADJUSTMENTS TO THE FINAL PAVEMENT MARKINGS AND SIGNAGE, WHICH MAY INCLUDE OMITTING, ADDING OR MODIFYING PAVEMENT MARKINGS AND TRAFFIC CONTROL SIGNS SUCH THAT ADEQUATE TRANSITIONS AND LANE TERMINATIONS BETWEEN ADJACENT ROADWAY SEGMENTS ARE CONSTRUCTED.

REVISED 06/04/2018

LAS VEGAS VALLEY WATER DISTRICT NOTES

LVVWD PROJECT # 125851

1. NO WORK SHALL BEGIN UNTIL THE WATER PLANS HAVE BEEN APPROVED FOR CONSTRUCTION BY THE LVVWD. FOLLOWING WATER PLAN APPROVAL, NOTICE SHALL BE GIVEN TO THE LVVWD COMMUNICATION SUPPORT CENTER (258-7171) TWO (2) WORKING DAYS PRIOR TO THE START OF CONSTRUCTION. FOR FUTURE INSPECTIONS, NOTICE MUST BE GIVEN BY 2:00 P.M. THE BUSINESS DAY PRIOR TO THE REQUESTED LVVWD INSPECTION. WHEN REQUESTING INSPECTIONS, PLEASE REFER TO THE PROJECT # IDENTIFIED ABOVE.
2. ALL WORK SHALL CONFORM TO THE LVVWD STANDARD PLATES, DRAWINGS, AND SPECIFICATIONS, AND TO THE 2010 EDITION OF THE UNIFORM DESIGN AND CONSTRUCTION STANDARDS FOR POTABLE WATER SYSTEMS (UDACS). THE LATEST EDITION OF UDACS SHALL SUPERCEDE ANY CONFLICTS CONTAINED IN THE APPROVED DRAWINGS AND/OR SPECIFICATIONS.
3. ALL WORK, EXCEPT AS MODIFIED BY THESE PLANS OR BY NOTE 2 ABOVE, SHALL BE DONE IN ACCORDANCE WITH THE MOST RECENT DRAFT OR EDITION OF THE UNIFORM STANDARD SPECIFICATIONS FOR PUBLIC WORKS CONSTRUCTION OFF-SITE IMPROVEMENT, CLARK COUNTY AREA.
4. A SINGLE PIPE MATERIAL SHALL BE USED THROUGHOUT THE PROJECT UNLESS OTHERWISE APPROVED BY THE LVVWD.
5. ALL SERVICE LATERALS TWO (2) INCHES IN DIAMETER AND SMALLER SHALL BE TYPE K COPPER TUBING WITH LVVWD APPROVED SERVICE SADDLES.
6. ALL WATER METER BOXES SHALL BE LOCATED OUTSIDE OF DRIVEWAY AREAS.
7. ALL VALVES SHALL BE LOCATED OUTSIDE OF DRIVEWAYS, VALLEY AND CURB GUTTERS.
8. ALL WATER AND STORM DRAIN OR SANITARY SEWER CROSSINGS SHALL CONFORM TO SECTION 2.22 OF THE 2010 EDITION OF THE UDACS.
9. ALL WATER FACILITIES SHALL BE FILLED, DISINFECTED, PRESSURE TESTED, FLUSHED, FILLED, AND AN ACCEPTABLE WATER SAMPLE OBTAINED, PRIOR TO CONNECTION TO THE LVVWD DISTRIBUTION SYSTEM.
10. THE CONTRACTOR MUST OBTAIN ALL METERS TWO (2) INCHES AND SMALLER FORM LVVWD CENTRAL STORES. TELEPHONE 258-3152 OR 258-3802, TWO (2) WORKING DAYS PRIOR TO METER PICKUP.
11. ANY INTERRUPTION OF SERVICE MUST BE PERFORMED IN ACCORDANCE WITH U.D.A.C.S. SECTION 3.14.01, AND APPROVED BY THE LVVWD INSPECTION DIVISION PRIOR TO SHUTDOWN. PROPER WRITTEN NOTIFICATION MUST BE GIVEN TO ALL AFFECTED CUSTOMERS.
12. ALL WATER FACILITY CONSTRUCTION MATERIALS USED MUST BE AS LISTED ON THE LVVWD PRE-APPROVED MATERIALS AND MANUFACTURER'S LISTING FOR NEW FACILITIES, LATEST REVISION, OR SPECIFICALLY APPROVED ON THESE PLANS.
13. TELEPHONE "CALL BEFORE YOU DIG" AT "811" OR 1-800-227-2600.
14. THE INSTALLATION OF LAS VEGAS VALLEY WATER DISTRICT (LVVWD) MUNICIPAL WATER FACILITIES WITHIN ALL STREETS IS ASSUMED TO BE IN COMPLIANCE WITH THE UNIFORM STANDARDS, INCLUDING THE PLACEMENT OF ASPHALT PAVING STREET SURFACES. ANY REPAIR WORK DONE BY THE LVVWD TO THE MUNICIPAL WATER FACILITIES WILL INCLUDE THE PLACEMENT OF AN APPROPRIATELY SIZED ASPHALT REPAIR PATCH ON THE STREET SURFACE.

ANY DECORATIVE PAVING SURFACE WITHIN THE STREET IS THE RESPONSIBILITY OF THE OWNER'S ASSOCIATION, OR THE INDIVIDUAL PROPERTY OWNERS IF NO OWNER'S ASSOCIATION IS IN EXISTENCE, OR THE AGENCY HAVING JURISDICTION. DECORATIVE SURFACE MATERIALS PLACED WITHIN THE TEN FOOT EASEMENT ABUTTING A PUBLIC OR PRIVATE STREET, IF DISTURBED BY THE LVVWD DURING THE REPAIR OR OPERATION OF ITS FACILITIES, WILL BE REPLACED BY LVVWD WITH AN APPROPRIATELY SIZED PLAIN FINISH CONCRETE PATCH. THE LVVWD WILL NOT RESTORE, AND WILL NOT BE RESPONSIBLE FOR THE RESTORATION OF, ANY DECORATIVE PAVING SURFACE WITHIN THE STREET. THE LVVWD WILL NOT ATTEMPT TO MATCH COLOR OR FINISH OF ANY ADJACENT MATERIALS.

APPROVED FOR CONSTRUCTION

LAS VEGAS VALLEY WATER DISTRICT ENGINEERING SERVICES
PROJECT No. 125851 FIRST APPROVED DATE: 12-17-18

QUANTITIES

DESCRIPTION	PUBLIC QUANTITY	PRIVATE QUANTITY
3-INCH ASPHALT CONCRETE PAVING	41 SY	SY
TYPE II GRAVEL	5 CY	CY
CURB AND GUTTER "L" CURB	8 LF	845 LF
CONCRETE VALLEY GUTTER	SF	2014 SF
4-INCH CONCRETE SIDEWALK	40 SF	9395 SF
6-INCH SEWER	LF	87 LF
2-INCH WATER COPPER	8 LF	LF
3-INCH WATER MAIN	LF	318 LF
6-INCH WATER MAIN	16 LF	316 LF
8-INCH WATER MAIN	71 LF	232 LF
10-INCH WATER MAIN	LF	311 LF
FIRE HYDRANT ASSEMBLY	EA	1 EA
FIRE HYDRANT RELOCATION	EA	1 EA
FIRE DEPARTMENT CONNECTION	EA	1 EA
8-INCH RPDA	1 EA	EA
8-INCH TAPPING TEE & VALVE	1 EA	EA
6-INCH GATE VALVE	EA	1 EA
8-INCH GATE VALVE	1 EA	EA
3-INCH 11.25° BEND	EA	1 EA
3-INCH 90° BEND	EA	1 EA
6-INCH 22.5° BEND	EA	1 EA
6-INCH 45° BEND	EA	1 EA
8-INCH 90° BEND	EA	1 EA
10-INCH 11.25° BEND	EA	1 EA
10-INCH 90° BEND	EA	1 EA
10-INCH TEE	EA	1 EA
POWER SERVICE TO LOTS	EA	1 EA
SIDEWALK UNDERDRAIN	EA	1 EA
10" X 8" REDUCER	EA	1 EA
COMMERCIAL DRIVEWAY	EA	1 EA
2" WATER METER & 2" RPPA	2 EA	EA
SIGNS	EA	19 EA

NOTE:
THIS QUANTITY ESTIMATE IS FOR BONDING PURPOSES ONLY.
CONTRACTOR TO DETERMINE INDEPENDENT ESTIMATIONS.

A.P.N.:
137-25-310-002

BASIS OF BEARINGS:
SEE COVER SHEET

BENCHMARK:
CITY OF LAS VEGAS BENCHMARK 1LV0925C4
RIVET AND PLATE IN TOP OF CURB AT SOUTHWEST CORNER OF CRESTDALE LANE AND RED FALLS LANES
ELEVATION= 2941.51 FEET / 896.573 METERS

NOTE:
LOCHSA ENGINEERING ASSUMES NO RESPONSIBILITY FOR EXISTING UTILITY LOCATIONS AND ELEVATIONS. THE UTILITIES SHOWN ON THIS PLAN ARE FROM THE BEST AVAILABLE INFORMATION. IT IS THE CONTRACTOR'S RESPONSIBILITY TO FIELD VERIFY THE LOCATION AND ELEVATION OF ALL UTILITIES, INCLUDING BUT NOT LIMITED TO, THE WATER, FIRE, SANITARY SEWER, STORM SEWER, TELEPHONE, POWER, GAS, AND IRRIGATION LINES PRIOR TO THE COMMENCEMENT OF CONSTRUCTION. IF CONFLICT EXISTS IN THE FIELD, THE CONTRACTOR IS TO NOTIFY THE PROJECT ARCHITECT, OWNER'S REPRESENTATIVE AND THE PROJECT ENGINEER IMMEDIATELY.

SAFETY ALERT
Call before you dig — Avoid cutting underground utility lines. It's costly.
AVOID HITTING UNDERGROUND TRAFFIC SIGNAL AND STREET LIGHT SYSTEM CONDUITS IT'S COSTLY
Call Before You Overhead — 1-702-227-2929
Call before you UnderGround — 1-702-432-5300 — FREEWAY AND ARTERIAL SYSTEM OF TRANSPORTATION
Call 811 OR 1-800-227-2600

LEGEND

CL OR SURVEY LINE	EASEMENT LINE
PROPERTY LINE	SAWCUT LINE
ROW LINE	SCARP LINE

DESCRIPTION:	CONTOUR LINES	EDGE OF PAVEMENT	"A" TYPE CURBS	"L" TYPE CURBS	WALLS	FENCES	AC PAVEMENT	CONCRETE	SPOT ELEVATIONS	SIGNS	MANHOLE W/ DESCRIPTION	MANHOLE DESCRIPTIONS	FIRE HYDRANTS	GATE VALVES	REDUCERS	CLEAN OUTS	UTILITY BOX OR VAULT	BACKWATER VALVES	100w HPS STREETLIGHTS	150w HPS STREETLIGHTS
EXISTING:	(2210)								(12.34) BC		Ⓢ	Ⓢ = SANITARY SEWER Ⓓ = STORM DRAIN						BWV		
PROPOSED:	2122								12.34 BC		Ⓢ	Ⓔ = ELECTRICAL Ⓣ = TELEPHONE						BWV		

REVISIONS:

REV.	DESCRIPTION:	DATE:

SEAL: PROFESSIONAL ENGINEER – STATE OF NEVADA – GUY M. MORRIS – EXP. 12-31-19 – CIVIL – No. 14526 – 11/13/18

DATE: 11/13/18 | DRAWN BY: NMG | SUBMITTAL: MYLAR | A/E PROJECT NO. 171058

A/E:
Gensler — 3883 Howard Hughes Pkwy, Suite 650, Las Vegas NV 89169, Tel: 702.893.2800, Fax: 702.893.2805

CONSULTANT:
Lochsa engineering — 6345 South Jones Blvd., Suite 100, Las Vegas, NV 89118 — Phone (702) 365-9312, Fax (702) 365-9317, www.lochsa.com

CONSTRUCTION MGMT: DATE:
PROJECT MANAGER:
COORDINATOR:

BUILDING DEPARTMENT:
CODE COMPLIANCE:
AHERA REVIEW:

ASBESTOS WORK IS:
REQUIRED ☐ NOT REQUIRED ☐

MPID: **0013529**

CLARK COUNTY SCHOOL DISTRICT
CONSTRUCTION MANAGEMENT DEPARTMENT 1180 MILITARY TRIBUTE PL HENDERSON NV 89074 PHONE: 702-799-8710

PROJECT: JOHN W. BONNER E.S. ADDITION
DRAWING TITLE: GENERAL NOTE SHEET
FACILITY: JOHN W. BONNER E.S. - LOCATION 309

SHEET NO: 715-210
C1.02
SHEET 2 OF 15 L18-02468

PROJ#:125851 AGREE#:116476 QS:137-25-SW

11/14/2018 10:29 AM
T:\CAD\171058\Drawings\Plot Drawings\C-171058-102-NT.dwg

GRAPHIC SCALE

40 0 20 40 80

(IN FEET)
1 Inch = 40 ft.

DEMOLITION NOTES:

– ALL CONSTRUCTION TO BE DONE IN ACCORDANCE WITH AREA UNIFORM STANDARD DRAWINGS LATEST EDITION AND/OR REGULATING ENTITY HAVING JURISDICTION.
– NOT ALL NOTES USED ON THIS SHEET –

1. REMOVE & DISPOSE OF EXISTING CURB AND GUTTER
2. REMOVE & DISPOSE OF EXISTING SIDEWALK
3. REMOVE EX. BUILDING AS DIRECTED BY OWNER.
4. REMOVE & DISPOSE OF EX. AC.
5. REMOVE & DISPOSE OF EXISTING PLAYGROUND EQUIPMENT AS DIRECTED BY OWNER.
6. SAWCUT, TRENCH AND BACKFILL FOR WATER LINE PER UDACS PLATE NO. 17. REPLACE CURB, GUTTER, SIDEWALK AND LANDSCAPING, AS NECESSARY.
7. SAWCUT AND MATCH EXISTING.
8. PROTECT IN PLACE
9. EX. LANDSCAPING AND IRRIGATION LINES TO BE REMOVED. IRRIGATION RE-CONNECTIONS TO BE COORDINATED WITH LANDSCAPE PLANS. LANDSCAPING TO BE SALVAGED AND RETURNED TO OWNER.
10. REMOVE EXISTING WALL.
11. EX SUN SHADE & PLAYGROUND TO BE REMOVED AND RELOCATED OR RETURNED TO OWNER AT OWNER DIRECTION

NOTE:

LOCHSA ENGINEERING ASSUMES NO RESPONSIBILITY FOR EXISTING UTILITY LOCATIONS AND ELEVATIONS. THE UTILITIES SHOWN ON THIS PLAN ARE FROM THE BEST AVAILABLE INFORMATION. IT IS THE CONTRACTOR'S RESPONSIBILITY TO FIELD VERIFY THE LOCATION AND ELEVATION OF ALL UTILITIES, INCLUDING BUT NOT LIMITED TO, THE WATER, FIRE, SANITARY SEWER, STORM SEWER, TELEPHONE, POWER, GAS, AND IRRIGATION LINES PRIOR TO THE COMMENCEMENT OF CONSTRUCTION. IF CONFLICT EXISTS IN THE FIELD, THE CONTRACTOR IS TO NOTIFY THE PROJECT ARCHITECT, OWNER'S REPRESENTATIVE AND THE PROJECT ENGINEER IMMEDIATELY.

A.P.N.:
137-25-310-002

BASIS OF BEARINGS:
SEE COVER SHEET

BENCHMARK:
CITY OF LAS VEGAS BENCHMARK
1LV0925C4 RIVET AND PLATE IN TOP OF CURB AT SOUTHWEST CORNER OF CRESTDALE LANE AND RED FALLS LANES ELEVATION= 2941.51 FEET / 896.573 METERS

SAFETY ALERT

Call Before You Overhead
1-702-227-2929

AVOID HITTING UNDERGROUND TRAFFIC SIGNAL AND STREET LIGHT SYSTEM CONDUITS IT'S COSTLY
Call before you UnderGround
1-702-432-5300
FREEWAY AND ARTERIAL SYSTEM OF TRANSPORTATION

Call before you dig
Avoid cutting underground utility lines. It's costly.
Call 811
OR 1-800-227-2600

LEGEND

CL OR SURVEY LINE
PROPERTY LINE
ROW LINE
EASEMENT LINE
SAWCUT LINE
SCARP LINE

DESCRIPTION:	CONTOUR LINES	EDGE OF PAVEMENT	"A" TYPE CURBS	"L" TYPE CURBS	WALLS	FENCES	AC PAVEMENT	CONCRETE	SPOT ELEVATIONS	SIGNS	MANHOLE W/ DESCRIPTION	MANHOLE DESCRIPTIONS	FIRE HYDRANTS	GATE VALVES	REDUCERS	CLEAN OUTS	UTILITY BOX OR VAULT	BACKWATER VALVES	100w HPS STREETLIGHTS	150w HPS STREETLIGHTS
EXISTING:	(2210)								(12.34) BC		S	S = SANITARY SEWER; D = STORM DRAIN						BWV		
PROPOSED:	2122								12.34 BC		S	E = ELECTRICAL; T = TELEPHONE						BWV		

11/14/2018 10:29 AM
T:\CAD\171058\Drawings\Plot Drawings\C-171058-DM.dwg

REVISIONS:

REV.	DESCRIPTION:	DATE:

SEAL: PROFESSIONAL ENGINEER STATE OF NEVADA GUY M. MORRIS EXP. 12-31-19 CIVIL No. 14526 11/13/18

DATE: 11/13/18
DRAWN BY: NMG
SUBMITTAL: MYLAR
A/E PROJECT NO. 171058

A/E:
Gensler
3883 Howard Hughes Pkwy
Suite 650
Las Vegas NV 89169
Tel: 702.893.2800
Fax: 702.893.2805

CONSULTANT:
Lochsa engineering
6345 South Jones Blvd.
Suite 100
Las Vegas, NV 89118
Phone (702) 365-9312
Fax (702) 365-9317
www.lochsa.com

CONSTRUCTION MGMT:	DATE:
PROJECT MANAGER:	
COORDINATOR:	

BUILDING DEPARTMENT:	
CODE COMPLIANCE:	
AHERA REVIEW:	

ASBESTOS WORK IS:
REQUIRED ☐ NOT REQUIRED ☐

MPID:
0013529

CLARK COUNTY SCHOOL DISTRICT
CONSTRUCTION MANAGEMENT DEPARTMENT 1180 MILITARY TRIBUTE PL HENDERSON NV 89074 PHONE: 702-799-8710

PROJECT: JOHN W. BONNER E.S. ADDITION

DRAWING TITLE: DEMOLITION PLANS SHEET 1 OF 1

FACILITY: JOHN W. BONNER E.S. - LOCATION 309

SHEET NO: 715-210
C2.01
SHEET 3 OF 15 L18-02468

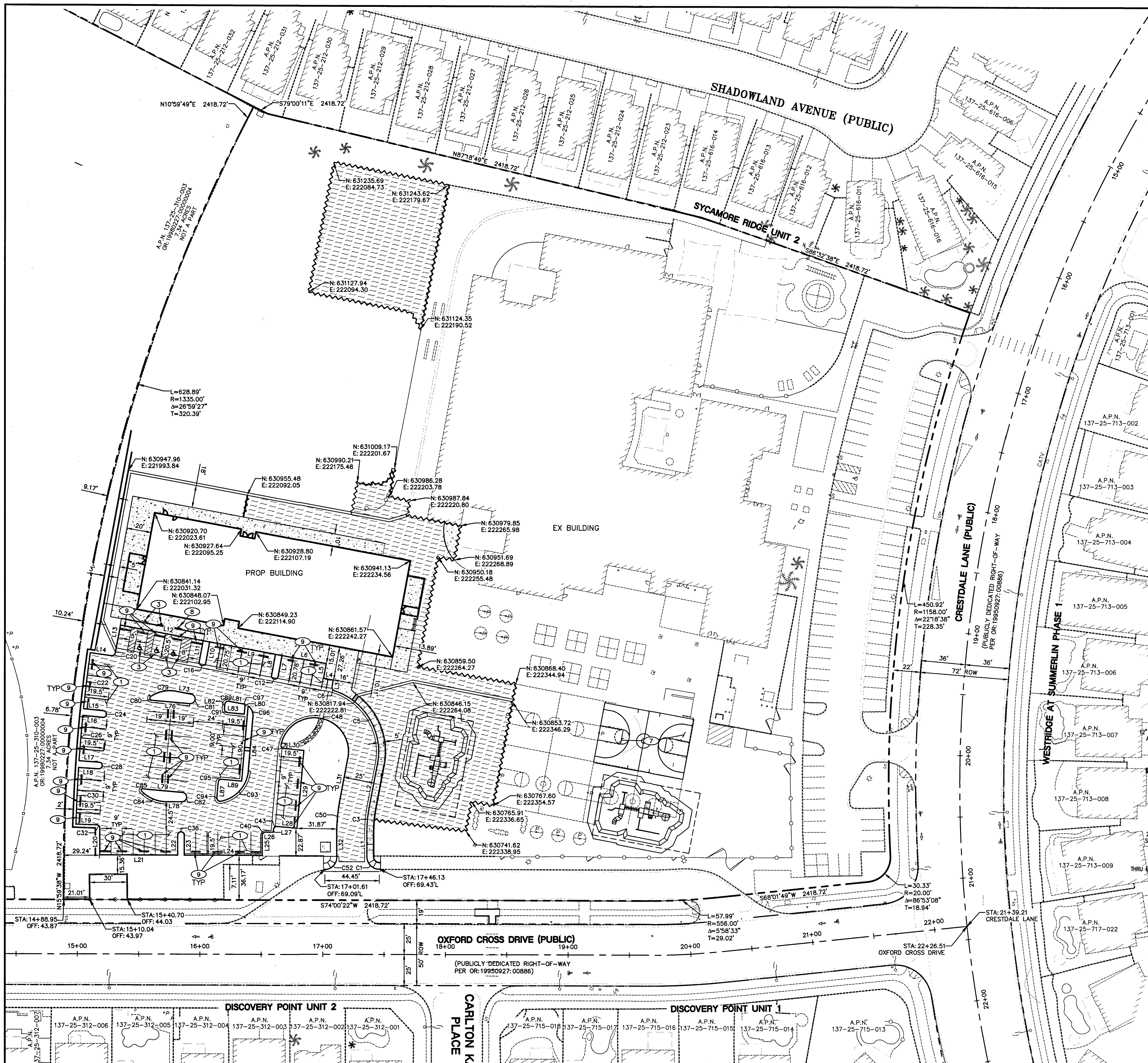

CURVE TABLE				
CURVE #	LENGTH	RADIUS	DELTA	TANGENT
C1	15.68'	10.00'	089°50'05"	9.97'
C3	19.78'	105.00'	010°47'27"	9.92'
C5	75.58'	52.50'	082°29'18"	46.03'
C6	4.30'	3.00'	082°09'33"	2.62'
C12	7.85'	2.50'	180°00'03"	395630.52'
C16	7.85'	2.50'	180°00'02"	418806.80'
C20	3.81'	2.50'	087°18'45"	2.39'
C22	46.63'	1331.09'	002°00'26"	23.32'
C24	7.87'	2.51'	179°57'04"	5879.66'
C26	37.52'	1331.09'	001°36'54"	18.76'
C28	7.84'	2.50'	179°44'17"	1092.84'
C30	46.63'	1331.09'	002°00'26"	23.32'
C32	3.85'	2.50'	088°14'57"	2.42'
C36	7.85'	2.50'	180°00'00"	INFINITY'
C40	3.93'	2.50'	090°00'01"	2.50'
C43	3.93'	2.50'	090°00'00"	2.50'
C47	4.23'	2.50'	096°53'02"	2.82'
C48	85.91'	27.50'	178°59'37"	3131.14'
C50	24.48'	130.00'	010°47'27"	12.28'
C52	15.26'	10.00'	087°26'14"	9.56'
C89	4.17'	2.50'	095°32'54"	2.75'
C91	3.93'	2.50'	090°00'00"	2.50'
C93	35.68'	27.50'	074°20'01"	20.85'
C94	4.61'	2.50'	105°39'59"	3.30'
C95	3.93'	2.50'	090°00'00"	2.50'
C96	9.36'	9.50'	056°26'45"	5.10'
C97	1.35'	9.50'	008°09'27"	0.68'

LINE TABLE		
LINE #	LENGTH	DIRECTION
L1	20.55'	N15°59'37"W
L2	36.16'	N05°12'10"W
L3	5.52'	N05°31'55"W
L4	8.00'	S84°28'05"W
L5	12.25'	N05°31'55"W
L6	37.00'	S84°28'05"W
L7	17.72'	S05°31'55"E
L8	17.72'	N05°31'55"W
L9	55.00'	S84°28'05"W
L10	17.72'	S05°31'55"E
L11	17.72'	N05°31'55"W
L12	69.00'	S84°28'05"W
L13	23.34'	S05°31'55"E
L14	17.75'	S81°46'50"W
L15	16.50'	N79°48'59"E
L16	16.49'	S79°33'16"W
L17	16.51'	N77°58'59"E
L18	16.51'	S77°43'16"W
L19	17.01'	N75°45'25"E
L20	22.04'	S15°59'38"E

LINE TABLE		
LINE #	LENGTH	DIRECTION
L21	64.00'	N74°00'22"E
L22	16.50'	N15°59'38"W
L23	16.50'	S15°59'38"E
L24	64.01'	N74°00'22"E
L25	16.50'	N15°59'38"W
L26	6.44'	N74°00'23"E
L27	2.42'	N11°04'49"W
L28	16.50'	N78°55'11"E
L29	64.00'	N11°04'49"W
L30	16.32'	S78°55'11"W
L31	36.16'	S05°12'10"E
L32	20.89'	S15°59'37"E
L80	7.57'	S11°04'49"E
L81	11.98'	N84°28'05"E
L82	3.97'	N11°04'49"W
L83	13.50'	S78°55'11"W
L84	44.35'	N11°04'49"W
L87	12.58'	S11°04'49"E
L89	16.50'	S78°55'11"W
L90	61.26'	S11°04'49"E

STRIPING NOTES:

1. INSTALL 9' X 18' PARKING WITH 4" WHITE PAINTED LINES. (TYPICAL)
2. INSTALL 4" WHITE PAINTED HATCH LINES 3' O.C. @ 45°.
3. INSTALL BLUE AND WHITE PAINTED HANDICAP PAVEMENT MARKINGS. PER DETAIL 9 ON C6.01.
4. INSTALL R7-8 "MINIMUM $250 FINE FOR USE BY OTHERS" NRS 484.408 SIGN (12" X 18") PER DETAIL THIS SHEET.
5. INSTALL HANDICAP RAMP CASE I PER CCAUSD #235.
6. INSTALL HANDICAP RAMP CASE II PER CCAUSD #235.
7. PLAYGROUND EQUIPMENT AND STRIPING PER ARCHITECTURAL PLANS.
8. INSTALL R7-8 "MINIMUM $250 FINE FOR USE BY OTHERS" NRS 484.408 SIGN "VAN ACCESSIBLE" (12" X 18") PER DETAIL THIS SHEET.
9. INSTALL PRECAST BUMPER BLOCK 2' AWAY FROM CURB FACE PER DETAIL 7 ON C6.01

HORIZONTAL CONTROL NOTE:

ALL DEIMENSIONS SHOWN ARE TO BACK OF CURB UNLESS NOTED OTHERWISE ON PLANS.

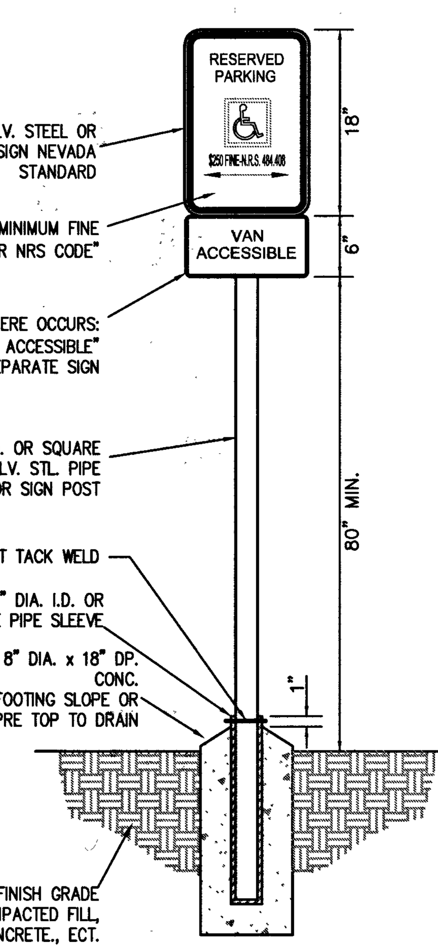

GRAPHIC SCALE

40 0 20 40 80

(IN FEET)
1 Inch = 40 ft.

NOTE:

LOCHSA ENGINEERING ASSUMES NO RESPONSIBILITY FOR EXISTING UTILITY LOCATIONS AND ELEVATIONS. THE UTILITIES SHOWN ON THIS PLAN ARE FROM THE BEST AVAILABLE INFORMATION. IT IS THE CONTRACTOR'S RESPONSIBILITY TO FIELD VERIFY THE LOCATION AND ELEVATION OF ALL UTILITIES, INCLUDING BUT NOT LIMITED TO, THE WATER, FIRE, SANITARY SEWER, STORM SEWER, TELEPHONE, POWER, GAS, AND IRRIGATION LINES PRIOR TO THE COMMENCEMENT OF CONSTRUCTION. IF CONFLICT EXISTS IN THE FIELD, THE CONTRACTOR IS TO NOTIFY THE PROJECT ARCHITECT, OWNER'S REPRESENTATIVE AND THE PROJECT ENGINEER IMMEDIATELY.

A.P.N.:

137-25-310-002

BASIS OF BEARINGS:

SEE COVER SHEET

BENCHMARK:

CITY OF LAS VEGAS BENCHMARK 1LV0925C4 RIVET AND PLATE IN TOP OF CURB AT SOUTHWEST CORNER OF CRESTDALE LANE AND RED FALLS LANES ELEVATION= 2941.51 FEET / 896.573 METERS

SAFETY ALERT
Call Before You Overhead
1-702-227-2929

AVOID HITTING UNDERGROUND TRAFFIC SIGNAL AND STREET LIGHT SYSTEM CONDUITS IT'S COSTLY
Call before you UnderGround
1-702-432-5300
FREEWAY AND ARTERIAL SYSTEM OF TRANSPORTATION

Call before you dig
Avoid cutting underground utility lines. It's costly.
Call 811
OR
1-800-227-2600

LEGEND

CL OR SURVEY LINE	
PROPERTY LINE	
ROW LINE	
EASEMENT LINE	
SAWCUT LINE	
SCARP LINE	

DESCRIPTION:	CONTOUR LINES	EDGE OF PAVEMENT	"A" TYPE CURBS	"L" TYPE CURBS	WALLS	FENCES	AC PAVEMENT	CONCRETE	SPOT ELEVATIONS	SIGNS	MANHOLE W/ DESCRIPTION	FIRE HYDRANTS	GATE VALVES	REDUCERS	CLEAN OUTS	UTILITY BOX OR VAULT	BACKWATER VALVES	100w HPS STREETLIGHTS	150w HPS STREETLIGHTS
EXISTING:	(2210)								(12.34)		S						BWV		
PROPOSED:	2122								12.34		S						BWV		

MANHOLE DESCRIPTIONS
S = SANITARY SEWER
D = STORM DRAIN
E = ELECTRICAL
T = TELEPHONE

REVISIONS:

REV.	DESCRIPTION:	DATE:

SEAL: PROFESSIONAL ENGINEER - STATE OF NEVADA, GUY M. MORRIS, EXP. 12-31-19, CIVIL, No. 14526, 11/13/18

DATE: 11/13/18
DRAWN BY: NMG
SUBMITTAL: MYLAR
A/E PROJECT NO. 171058

A/E:
Gensler
3883 Howard Hughes Pkwy
Suite 650
Las Vegas NV 89169
Tel: 702.893.2800
Fax: 702.893.2805

CONSULTANT:
Lochsa engineering
6345 South Jones Blvd.
Suite 100
Las Vegas, NV 89118
Phone (702) 365-9312
Fax (702) 365-9317
www.lochsa.com

CONSTRUCTION MGMT: DATE:
PROJECT MANAGER:
COORDINATOR:

BUILDING DEPARTMENT:
CODE COMPLIANCE:
AHERA REVIEW:

ASBESTOS WORK IS:
REQUIRED ☐ NOT REQUIRED ☐

MPID: 0013529

CLARK COUNTY SCHOOL DISTRICT

CONSTRUCTION MANAGEMENT DEPARTMENT 1180 MILITARY TRIBUTE PL HENDERSON NV 89074 PHONE: 702-799-8710

PROJECT: JOHN W. BONNER E.S. ADDITION

DRAWING TITLE: HORIZONTAL CONTROL PLANS SHEET 1 OF 1

FACILITY: JOHN W. BONNER E.S. - LOCATION 309

SHEET NO: 715-210

C3.01

SHEET 4 OF 15 L18-02468

11/14/2018 10:29 AM
T:\CAD\171058\Drawings\Plot Drawings\C-171058-HC.dwg

MAX 2% H.S.
MIN. 5% L.S.
BUILDING FF

TYPICAL GRADING AWAY FROM BUILDING

FLOOD ZONE NOTE:

THE PROJECT SITE IS COVERED BY THE FLOOD INSURANCE RATE MAP (FIRM) FOR THE CLARK COUNTY AND INCORPORATED AREAS, NEVADA, COMMUNITY PANEL NUMBER: 32003C2150E, EFFECTIVE DATE: SEPTEMBER 27, 2002. THE SITE FALLS WITHIN ZONE 'X', DESCRIBED BY FEMA AS: AREAS DETERMINED TO BE OUTSIDE THE 0.2% ANNUAL CHANCE FLOODPLAIN.

CONSTRUCTION NOTES:

- ALL CONSTRUCTION TO BE DONE IN ACCORDANCE WITH "CLARK COUNTY AREA UNIFORM STANDARD DRAWINGS (C.C.A.U.S.D.)" LATEST EDITION AND/OR REGULATING ENTITY HAVING JURISDICTION. NOT ALL NOTES USED ON THIS SHEET

1. CONSTRUCT AC PAVEMENT PER DETAIL 2 ON C6.01.
2. CONSTRUCT "A" TYPE CURB PER DETAIL 1 ON C6.01.
3. CONSTRUCT "L" TYPE CURB PER CCAUSD No. 216.
4. CONSTRUCT CONC. SIDEWALK PER CCAUSD No. 234. REFER TO ARCH. PLANS FOR FINISHING SPECIFICATIONS.
5. CONSTRUCT 2' VALLEY GUTTER PER DETAIL 3 ON C6.01.
6. CONSTRUCT "U" CHANNEL PER DETAIL 6 ON C6.01
7. CONSTRUCT SIDEWALK UNDER DRAIN PER CCAUSD. No. 236.
8. CONSTRUCT HANDICAP RAMP CASE I PER CCAUSD No. 235. A=8', B=8'.
9. SAWCUT AND MATCH EXISTING.
10. FENCE PER ARCHITECTURAL PLANS.
11. PLAYGROUND PER ARCHITECTURAL PLANS.
12. CONSTRUCT CONC. SIDEWALK PER DETAIL 8 ON C6.01. REFER TO ARCH. PLANS FOR FINISHING SPECIFICATIONS.
13. CONSTRUCT CONC. PAD UNDER STAIRS PER DETAIL 5 ON SHEET C6.01
14. CONSTRUCT SIDEWALK PER CCAUSD No. 234.
15. TRENCH, BACKFILL, AND AC RESTORATION CCAUSD Nos. 503, 500.3, 500.4, AND 500.5.
16. CONSTRUCT 3' VALLEY GUTTER PER DETAIL 10 ON C6.01.
17. PLAYGROUND EQUIPMENT TO BE REMOVED AND REPLACED AFTER GRADING.
18. CONSTRUCT RETAINING WALL PER STRUCTURAL DETAILS.
19. CONSTRUCT WALL PER SOUTHERN NEVADA BUILDING OFFICIAL REGIONAL STANDARDS PLATE B-100-1.
20. INSTALL D50 = 3" RIP RAP. THICKNESS (T) = 6"
21. INSTALL 2' WIDE CURB OPENING.
22. CONSTRUCT RETAINING WALL PER STRUCTURAL DETAIL 6/C6.03. THIS WALL IS TO BE CONSTRUCTED SECOND.
23. CONSTRUCT RETAINING WALL PER STRUCTURAL DETAIL 4/C6.03. THIS WALL MUST BE CONSTRUCTED FIRST.
24. CONSTRUCT RETAINING WALL PER STRUCTURAL DETAIL 7/C6.03

GRADING NOTES:

1. SLOPES 4:1 OR STEEPER AND FINE-GRAINED MATERIALS THAT HAVE BEEN DISTURBED (SANDY AND SILTY MATERIALS) SHOULD BE PROTECTED WITH BURLAP OR OTHER EROSION CONTROL FABRIC/MATERIAL, UNLESS OTHERWISE SPECIFIED BY LANDSCAPE DRAWINGS AND SPECIFICATIONS OR THE SOILS REPORT.
2. CONTRACTOR SHALL DETERMINE HIS OWN FOOTING OR BASEMENT EXCAVATION QUANTITIES, EVEN THOUGH SHOWN ON ROUGH GRADING PLANS. ADDITIONALLY, STRUCTURE BACKFILL COSTS SHOULD BE INCLUDED IN THE COST OF THE STRUCTURE, UNLESS OTHERWISE SPECIFIED IN THE CONTRACT DOCUMENTS.
3. CONTRACTOR SHALL NOTIFY LOCHSA ENGINEERING WITHIN 24 HOURS OF OMISSIONS AND ERRORS DISCOVERED ON PLANS. LOCHSA ENGINEERING WILL NOT BE RESPONSIBLE FOR ANY "CORRECTIVE" WORK DONE BY OTHERS.
4. CONTRACTOR TO ENSURE POSITIVE DRAINAGE. NO PONDING ALLOWED. CONTRACTOR TO FOLLOW RECOMMENDATIONS AS OUTLINED IN THE PROJECT GEOTECHNICAL REPORT, INCLUDING BUT NOT LIMITED TO EXCAVATION, GRADING AND COMPACTION. REFER TO THE REPORT PREPARED BY: NINYO & MOORE, PROJECT No. 304190001.

EXISTING UTILITY NOTE:

CONTRACTOR TO ADJUST ALL EXISTING UTILITIES TO MATCH PROPOSED FINISH GRADE ELEVATIONS.

LAS VEGAS VALLEY CONSTRUCTION SITE BEST MANAGEMENT PRACTICES GUIDANCE MANUAL SECTION 3.5.1 STANDARD NOTES 1-5

1. THE OWNER, SITE DEVELOPER, CONTRACTOR, AND/OR THEIR AUTHORIZED AGENTS SHALL EACH DAY REMOVE ALL SEDIMENT, MUD, CONSTRUCTION DEBRIS, OR OTHER POTENTIAL POLLUTANTS THAT MAY HAVE BEEN DISCHARGED TO, OR ACCUMULATED IN, THE PUBLIC RIGHT-OF-WAY OF THE CITY OF LAS VEGAS AS A RESULT OF CONSTRUCTION ACTIVITIES ASSOCIATED WITH THIS SITE DEVELOPMENT OR CONSTRUCTION PROJECT. SUCH MATERIAL SHALL BE PREVENTED FROM ENTERING THE STORM SEWER SYSTEM.
2. ADDITIONAL CONSTRUCTION SITE DISCHARGE BEST MANAGEMENT PRACTICES MAY BE REQUIRED OF THE OWNER AND HIS OR HER AGENTS DUE TO UNFORESEEN EROSION PROBLEMS OR IF THE SUBMITTED PLAN DOES NOT MEET THE PERFORMANCE STANDARDS SPECIFIED IN THE CITY OF LAS VEGAS AND THE LAS VEGAS VALLEY CONSTRUCTION SITE BMP GUIDANCE MANUAL.
3. TEMPORARY OR PERMANENT STABILIZATION PRACTICES WILL BE INSTALLED ON DISTURBED AREAS AS SOON AS PRACTICABLE AND NO LATER THAN 14 DAYS AFTER THE CONSTRUCTION ACTIVITY IN THAT PORTION OF THE SITE HAS TEMPORARILY OR PERMANENTLY CEASED. SOME EXCEPTIONS MAY APPLY; REFER TO THE NEVADA STORMWATER GENERAL PERMIT FOR CONSTRUCTION ACTIVITY NVR10000, SECTION III.A.5.
4. AT A MINIMUM, THE CONTRACTOR OR HIS AGENT SHALL INSPECT ALL DISTURBED AREAS, AREAS USED FOR STORAGE OF MATERIALS AND EQUIPMENT THAT ARE EXPOSED TO PRECIPITATION, VEHICLE ENTRANCE AND EXIT LOCATIONS, AND ALL BMPS WEEKLY, AND WITHIN 24 HOURS AFTER ANY RAIN EVENT OR 0.5 INCHES OR MORE. THE CONTRACTOR OR HIS AGENT SHALL UPDATE OR MODIFY THE STORMWATER POLLUTION PREVENTION PLAN AS NECESSARY. SOME EXCEPTIONS TO WEEKLY INSPECTIONS MAY APPLY, SUCH AS SUSPENSION OF LAND DISTURBANCE ACTIVITIES. REFER TO THE NEVADA STORMWATER GENERAL PERMIT FOR CONSTRUCTION ACTIVITY NVR100000, SECTION III.A.12.
5. ACCUMULATED SEDIMENT IN BMP'S SHALL BE REMOVED WITHIN SEVEN DAYS AFTER A STORMWATER RUNOFF EVENT OR PRIOR TO THE NEXT ANTICIPATED STORM EVENT, WHICHEVER IS EARLIER. SEDIMENT MUST BE REMOVED WHEN BMP DESIGN CAPACITY HAS BEEN REDUCED BY 50 PERCENT OR MORE.

CUT	FILL
3025 CY	1816 CY

NOTE: CUT/FILL QUANTITIES ARE TO FINISHED GRADE & DO NOT INCLUDE MATERIAL THICKNESS'S, FOOTINGS, ETC.

GRADING PLAN CERTIFICATION

NAME: GUY M. MORRIS PE # 14526 DATE 11-13-18

CERTIFY THAT THIS GRADING PLAN IS IN CONFORMANCE WITH APPROVED DRAINAGE STUDY FOR THIS SITE ON FILE AT THE CITY OF LAS VEGAS FOR THIS PROJECT.

LOCHSA ENGINEERING N

GRAPHIC SCALE
30 0 15 30 60
(IN FEET)
1 inch = 30 ft.

NOTE:

LOCHSA ENGINEERING ASSUMES NO RESPONSIBILITY FOR EXISTING UTILITY LOCATIONS AND ELEVATIONS. THE UTILITIES SHOWN ON THIS PLAN ARE FROM THE BEST AVAILABLE INFORMATION. IT IS THE CONTRACTOR'S RESPONSIBILITY TO FIELD VERIFY THE LOCATION AND ELEVATION OF ALL UTILITIES, INCLUDING BUT NOT LIMITED TO, THE WATER, FIRE, SANITARY SEWER, STORM SEWER, TELEPHONE, POWER, GAS, AND IRRIGATION LINES PRIOR TO THE COMMENCEMENT OF CONSTRUCTION. IF CONFLICT EXISTS IN THE FIELD, THE CONTRACTOR IS TO NOTIFY THE PROJECT ARCHITECT, OWNER'S REPRESENTATIVE AND THE PROJECT ENGINEER IMMEDIATELY.

SAFETY ALERT
Call Before You Overhead
1-702-227-2929
AVOID HITTING UNDERGROUND TRAFFIC SIGNAL AND STREET LIGHT SYSTEM CONDUITS IT'S COSTLY
Call before you UnderGround
1-702-432-5300
FREEWAY AND ARTERIAL SYSTEM OF TRANSPORTATION 1-800-227-2600
Call before you dig
Avoid cutting underground utility lines. It's costly.
Call 811

A.P.N.:
137-25-310-002

BASIS OF BEARINGS:
SEE COVER SHEET

BENCHMARK:
CITY OF LAS VEGAS BENCHMARK 1LV0925C4 RIVET AND PLATE IN TOP OF CURB AT SOUTHWEST CORNER OF CRESTDALE LANE AND RED FALLS LANES ELEVATION= 2941.51 FEET / 896.573 METERS

LEGEND

CL OR SURVEY LINE
PROPERTY LINE
ROW LINE
EASEMENT LINE
SAWCUT LINE
SCARP LINE

DESCRIPTION:	CONTOUR LINES	EDGE OF PAVEMENT	"A" TYPE CURBS	"L" TYPE CURBS	WALLS	FENCES	AC PAVEMENT	CONCRETE	SPOT ELEVATIONS	SIGNS	MANHOLE W/ DESCRIPTION
EXISTING:	(2210)								(12.34) BC		Ⓢ
PROPOSED:	2122								12.34 BC		Ⓢ

MANHOLE DESCRIPTIONS
Ⓢ = SANITARY SEWER
Ⓓ = STORM DRAIN
Ⓔ = ELECTRICAL
Ⓣ = TELEPHONE

FIRE HYDRANTS	GATE VALVES	REDUCERS	CLEAN OUTS	UTILITY BOX OR VAULT	BACKWATER VALVES	100w HPS STREETLIGHTS	150w HPS STREETLIGHTS
					BWV		
					BWV		

REVISIONS:

REV.	DESCRIPTION:	DATE:

SEAL: PROFESSIONAL ENGINEER STATE OF NEVADA GUY M. MORRIS EXP. 12-31-19 CIVIL No. 14526 11/13/18

DATE: 11/13/18
DRAWN BY: NMG
SUBMITTAL: MYLAR
A/E PROJECT NO. 171058

A/E:

Gensler
3883 Howard Hughes Pkwy
Suite 650
Las Vegas NV 89169
Tel: 702.893.2800
Fax: 702.893.2805

CONSULTANT:

Lochsa engineering
6345 South Jones Blvd.
Suite 100
Las Vegas, NV 89118
Phone (702) 365-9312
Fax (702) 365-9317
www.lochsa.com

CONSTRUCTION MGMT: DATE:
PROJECT MANAGER:
COORDINATOR:
BUILDING DEPARTMENT:
CODE COMPLIANCE:
AHERA REVIEW:

ASBESTOS WORK IS:
REQUIRED ☐ NOT REQUIRED ☐

MPID: 0013529

CLARK COUNTY SCHOOL DISTRICT

CONSTRUCTION MANAGEMENT DEPARTMENT 1180 MILITARY TRIBUTE PL HENDERSON NV 89074 PHONE: 702-799-8710

PROJECT: JOHN W. BONNER E.S. ADDITION

DRAWING TITLE: GRADING PLANS SHEET 1 OF 1

FACILITY: JOHN W. BONNER E.S. - LOCATION 309

SHEET NO: 715-210
C4.01

11/14/2018 10:30 AM
T:\CAD\171058\Drawings\Plot Drawings\C-171058-GP.dwg

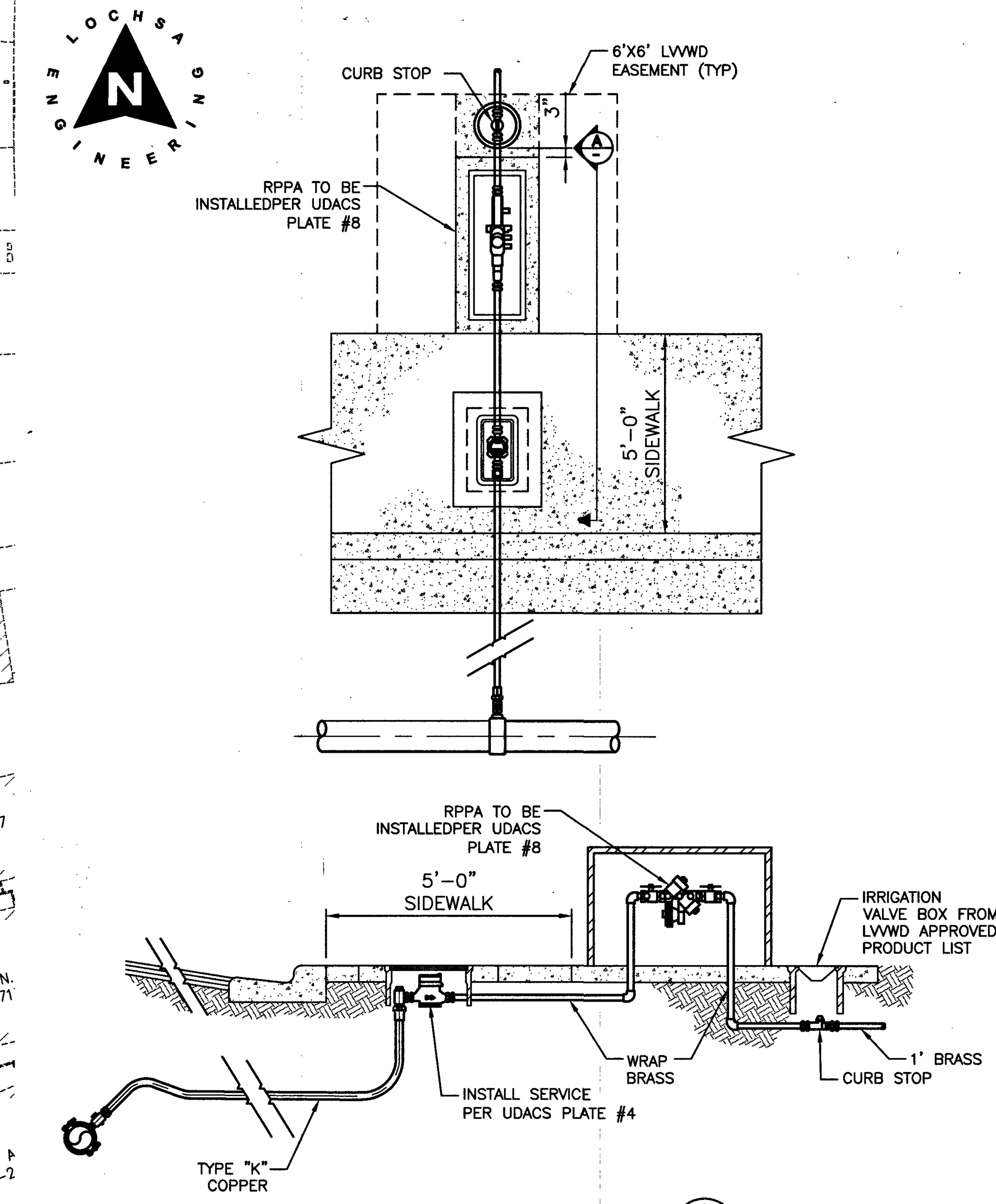

SECTION (A)
NOT TO SCALE

METER WITH RPPA PER UDACS PLATE NOS. 4 AND 8 WITH CURB STOP

SOUTHWEST GAS CORPORATION

SOUTHWEST GAS CORPORATION (signature) DATE 11/15/18

CITY OF LAS VEGAS FIRE DEPARTMENT APPROVAL

BY: (signature) DATE: 11/28/18

APPROVAL OF THESE PLANS SHALL NOT BE CONSTRUED TO BE A PERMIT FOR, OR AN APPROVAL OF, ANY VIOLATION OF ANY OF THE PROVISIONS OF THE STATE OR COUNTY LAWS. FIRE FLOW 2500 GPM AT 20 P.S.I. RESIDUAL.

FIRE DEPARTMENT APPROVAL

APPROVAL BY THE FIRE DEPARTMENT HAVING JURISDICTION IS REQUIRED PRIOR TO OBTAINING FINAL APPROVAL FROM THE LAS VEGAS VALLEY WATER DISTRICT.

APPROVED FOR CONSTRUCTION

(signature)
LAS VEGAS VALLEY WATER DISTRICT ENGINEERING SERVICES
DATE: 12-17-18 PROJECT No. 125851
LVVWD APPROVED FIRE FLOW = 2500 GPM AT 20 PSI RESIDUAL

NOTE:

LOCHSA ENGINEERING ASSUMES NO RESPONSIBILITY FOR EXISTING UTILITY LOCATIONS AND ELEVATIONS. THE UTILITIES SHOWN ON THIS PLAN ARE FROM THE BEST AVAILABLE INFORMATION. IT IS THE CONTRACTOR'S RESPONSIBILITY TO FIELD VERIFY THE LOCATION AND ELEVATION OF ALL UTILITIES, INCLUDING BUT NOT LIMITED TO, THE WATER, FIRE, SANITARY SEWER, STORM SEWER, TELEPHONE, POWER, GAS, AND IRRIGATION LINES PRIOR TO THE COMMENCEMENT OF CONSTRUCTION. IF CONFLICT EXISTS IN THE FIELD, THE CONTRACTOR IS TO NOTIFY THE PROJECT ARCHITECT, OWNER'S REPRESENTATIVE AND THE PROJECT ENGINEER IMMEDIATELY.

SAFETY ALERT
Call before you dig
Avoid cutting underground utility lines. It's costly.
AVOID HITTING UNDERGROUND TRAFFIC SIGNAL AND STREET LIGHT SYSTEM CONDUITS IT'S COSTLY
Call Before You Overhead
Call before you UnderGround
Call 811
1-702-432-5300
OR
1-702-227-2929 FREEWAY AND ARTERIAL SYSTEM OF TRANSPORTATION 1-800-227-2600

LEGEND

CL OR SURVEY LINE
PROPERTY LINE
ROW LINE
EASEMENT LINE
SAWCUT LINE
SCARP LINE

DESCRIPTION:	CONTOUR LINES	EDGE OF PAVEMENT	"A" TYPE CURBS	"L" TYPE CURBS	WALLS	FENCES	AC PAVEMENT	CONCRETE	SPOT ELEVATIONS	SIGNS	MANHOLE W/ DESCRIPTION	FIRE HYDRANTS	GATE VALVES	REDUCERS	CLEAN OUTS	UTILITY BOX OR VAULT	BACKWATER VALVES	100w HPS STREETLIGHTS	150w HPS STREETLIGHTS
EXISTING:	(2210)								(12.34) BC		Ⓢ		⊗	▷	○		BWV		
PROPOSED:	2122								12.34 BC		Ⓢ			▶	●		BWV		

MANHOLE DESCRIPTIONS
Ⓢ = SANITARY SEWER
Ⓓ = STORM DRAIN
Ⓔ = ELECTRICAL
Ⓣ = TELEPHONE

11/14/2018 10:30 AM
T:\CAD\171058\Drawings\Plot Drawings\C-171058-MASTER-UT.dwg

REVISIONS:		
REV.	DESCRIPTION:	DATE:

SEAL: PROFESSIONAL ENGINEER STATE OF NEVADA GUY M. MORRIS EXP. 12-31-19 CIVIL No. 14526 11/13/18

DATE: 11/13/18
DRAWN BY: NMG
SUBMITTAL: MYLAR
A/E PROJECT NO. 171058

A/E: Gensler
3883 Howard Hughes Pkwy
Suite 650
Las Vegas NV 89169
Tel: 702.893.2800
Fax: 702.893.2805

CONSULTANT: Lochsa engineering
6345 South Jones Blvd.
Suite 100
Las Vegas, NV 89118
Phone (702) 365-9312
Fax (702) 365-9317
www.lochsa.com

CONSTRUCTION MGMT:	DATE:
PROJECT MANAGER:	
COORDINATOR:	

BUILDING DEPARTMENT:	
CODE COMPLIANCE:	
AHERA REVIEW:	

ASBESTOS WORK IS:
REQUIRED ☐ NOT REQUIRED ☐

MPID: 0013529

CLARK COUNTY SCHOOL DISTRICT

CONSTRUCTION MANAGEMENT DEPARTMENT 1180 MILITARY TRIBUTE PL HENDERSON NV 89074 PHONE: 702-799-8710

PROJECT: JOHN W. BONNER E.S. ADDITION

DRAWING TITLE: UTILITY PLANS MASTER UTILITY PLAN

FACILITY: JOHN W. BONNER E.S. - LOCATION 309

SHEET NO: 715-210
C5.00
SHEET 6 OF 15 L18-02468

PROJ#:125851 AGREE#:116476 QS:137-25-SW

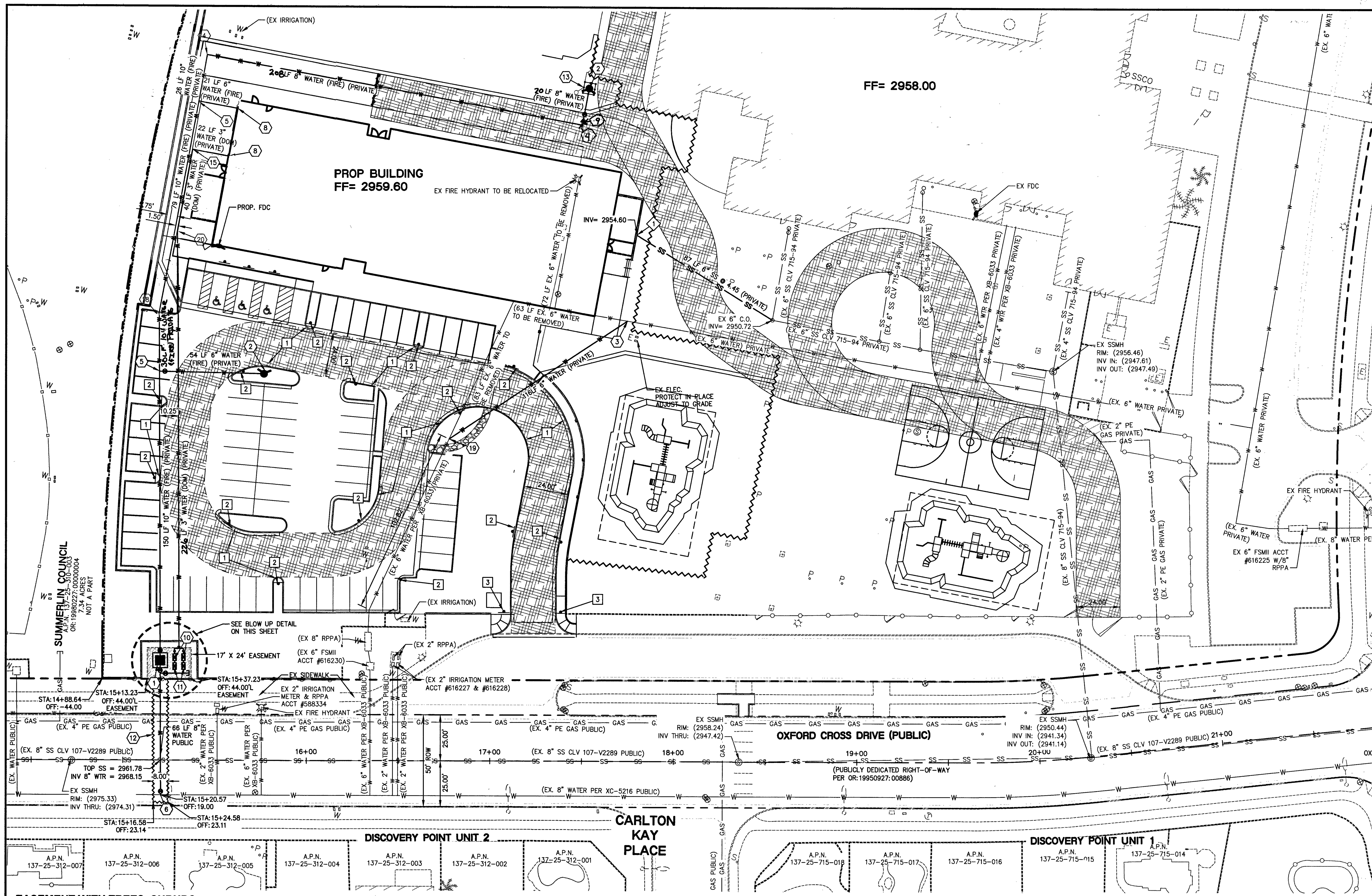

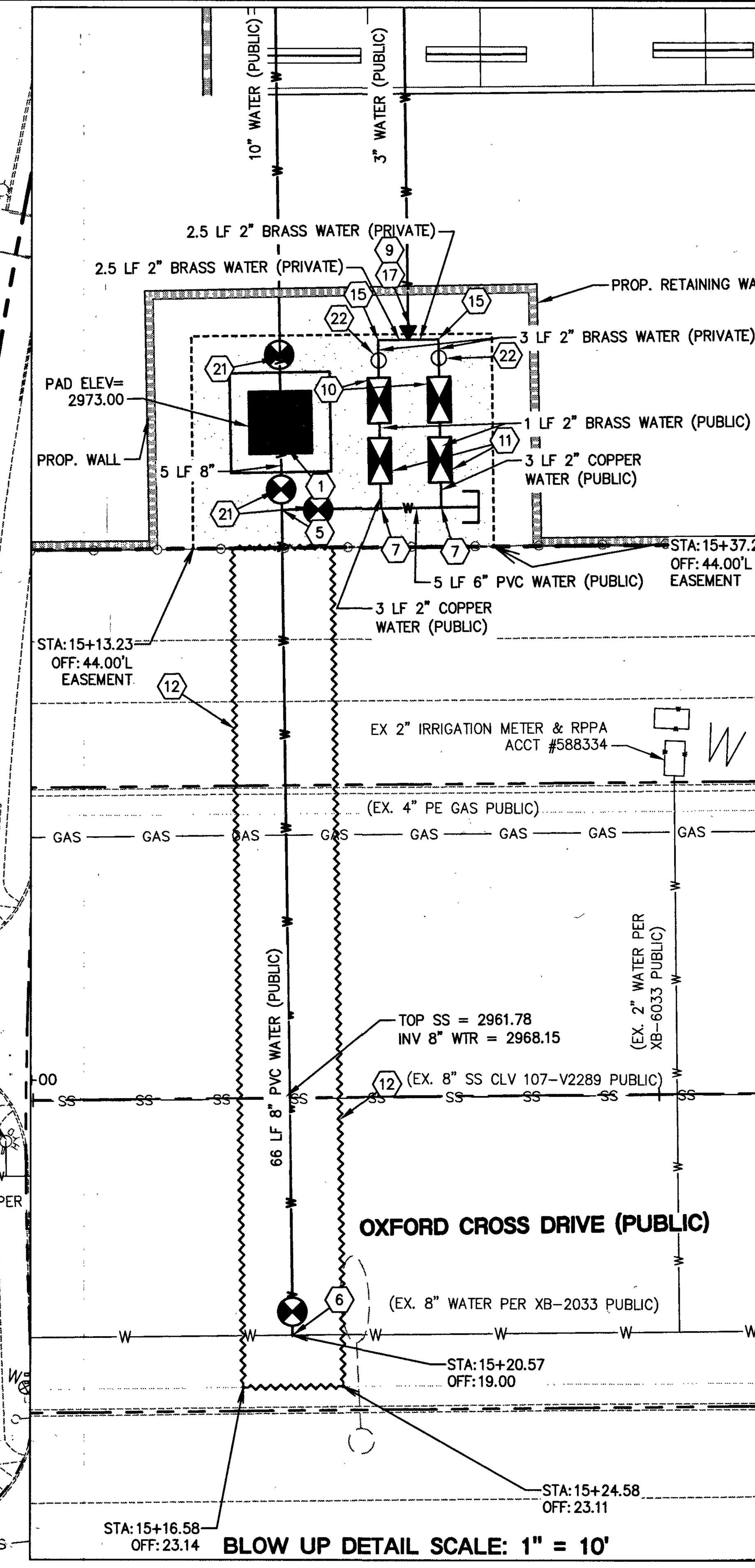

BLOW UP DETAIL SCALE: 1" = 10'

GRAPHIC SCALE

(IN FEET)
1 Inch = 30 ft.

EASEMENT WITH TREES, SHRUBS, DECORATIVE ROCKS, BLOCK WALL OR FENCE

TREE'S, SHRUBS, OR DECORATIVE ROCKS, AND ANY BLOCK WALL OR OTHER FENCE MATERIAL, SHALL BE DESIGNED AND CONSTRUCTED AROUND THE EASEMENT(S) TO ALLOW THE DISTRICT DIRECT ACCESS TO THE VAULT(S), BACKFLOW ASSEMBLIES, AND PIPING FROM THE ADJACENT RIGHT OF WAY.

NOTE:

PROTECT IN PLACE AND ADJUST LVVWD EXISTING FACILITIES TO FINISHED GRADE. ALL LVVWD FACILITIES SHALL BE ACCESSIBLE AT ALL TIMES.

FIRE FLOW CALCULATIONS

BASED ON BUILDING WITH HIGHEST DEMAND:

SQUARE FOOTAGE:	35,434
LARGEST AREA BETWEEN 4 HR. AREA SEPARATION WALLS:	N/A
BUILDING HEIGHT:	38'-2"
NUMBER OF STORIES:	2
TYPE OF CONSTRUCTION:	V-B
OCCUPANCY:	GROUP E EDUCATION
SPRINKLER SYSTEM:	YES
EXPOSURES:	4
ROOF CONSTRUCTION:	SINGLE PLY PVC – CLASS C
FLOW REQUIRED @ 20 PSI RESIDUAL (50% REDUCTION):	2500 GPM
MAX. STORAGE HEIGHT:	N/A
PRESSURE ZONE	3090

SEWER CONSTRUCTION NOTES:

ALL GRAVITY SANITARY SEWER LINES TO BE SDR-35 PVC, UNLESS NOTED OTHERWISE.

⟨1⟩ STUB & CAP SANITARY SEWER SERVICE. REFER TO PLUMBING PLANS FOR CONTINUATION.

REDUCED PRESSURE PRINCIPLE ASSEMBLY (2) 2"

APPROVED REDUCED PRESSURE PRINCIPLE ASSEMBLY(S) SHALL BE INSTALLED PER THE UDACS PLATE NO. 8. NO WATER SHALL BE TAKEN FROM A SERVICE REQUIRING BACKFLOW PREVENTION UNTIL THE REDUCED PRESSURE PRINCIPLE ASSEMBLY HAS BEEN SUCCESSFULLY TESTED BY LVVWD. ANY BLOCK WALL OR OTHER FENCE MATERIAL SHALL BE DESIGNED AND CONSTRUCTED AROUND THE OUTSIDE OF THE EASEMENT(S) TO ALLOW THE DISTRICT DIRECT ACCESS FROM THE ADJACENT RIGHT-OF-WAY. EASEMENTS SHALL BE CLEARLY MARKED OR STAKED PRIOR TO THE START OF CONSTRUCTION.

REDUCED PRESSURE DETECTOR ASSEMBLY (RPDA) (1) 8"

THE REDUCED PRESSURE DETECTOR ASSEMBLIES SHALL BE INSTALLED IN ACCORDANCE WITH THE UDACS PLATE NO. 59. NO WATER SHALL BE TAKEN FROM A SERVICE REQUIRING BACKFLOW PREVENTION UNTIL THE ASSEMBLY HAS BEEN SUCCESSFULLY TESTED BY LVVWD. ANY BLOCK WALL OR OTHER FENCE MATERIAL SHALL BE DESIGNED AND CONSTRUCTED AROUND THE OUTSIDE OF THE EASEMENT(S) SO AS TO ALLOW LVVWD DIRECT ACCESS FROM THE ADJACENT RIGHT-OF-WAY. EASEMENTS SHALL BE CLEARLY MARKED OR STAKED PRIOR TO THE START OF CONSTRUCTION.

WATER CONSTRUCTION NOTES:

- ALL WATER CONSTRUCTION TO BE DONE IN ACCORDANCE WITH "UNIFORM DESIGN AND CONSTRUCTION STANDARDS FOR WATER DISTRIBUTION SYSTEMS (UDACS)" LATEST EDITION.
- NOT ALL NOTES USED ON THIS SHEET –

1. INSTALL 8" RPDA PER UDACS PLT 56, LOW LOSS UNIT
2. INSTALL FIRE HYDRANT W/GATE VALVE PER UDACS PLATE NO. 40.
3. INSTALL 45° BEND W/THRUST BLOCK (SAME SIZE AS PIPE) PER UDACS PLATE NO. 31.
4. INSTALL 90° BEND W/THRUST BLOCK (SAME SIZE AS PIPE) PER UDACS PLATE NO. 31.
5. INSTALL TEE (SAME SIZE AS PIPES) W/ THRUST BLOCK PER UDACS NO. 31.
6. INSTALL TAPPING VALVE & TAPPING SLEEVE (SAME SIZE AS PIPE) PER UDACS sect. 2.24.01A.
7. INSTALL 2" SERVICE SADDLE CONNECTION WITH CORP. STOP PER UDACS PLATE NO. 4.
8. STUB & CAP WATER SERVICE. REFER TO PLUMBING PLANS FOR CONTINUATION.
9. INSTALL REDUCER W/ ANCHOR BLOCK (SAME SIZE AS PIPES) PER UDACS PLATE NO. 30.
10. INSTALL 2" RPPA WITH ENCLOSURE PER UDACS PLATE NO. 8.
11. INSTALL 2" WATER SERVICE & METER PER UDACS PLATE No. 4.
12. SAWCUT, TRENCH AND BACKFILL PER UDACS PLATE NO. 17. REPLACE CURB, GUTTER AND SIDEWALK AS NECESSARY.
13. INSTALL PROTECTIVE BOLLARDS, 3' ON CENTER, PER UDACS PLATE NO. 75.
14. INSTALL 45° BEND (SAME SIZE AS PIPE)
15. INSTALL 90° BEND (SAME SIZE AS PIPE)
16. IRRIGATION TO BE REMOVED, ABANDONED, AND/OR RELOCATED PER LANDSCAPE PLANS.
17. INSTALL TEE (SAME SIZE AS PIPES).
18. INSTALL 11.25° BEND W/THRUST BLOCK (SAME SIZE AS PIPE) PER UDACS PLATE NO. 31.
19. INSTALL 22.5° BEND W/THRUST BLOCK (SAME SIZE AS PIPE) PER UDACS PLATE NO. 31.
20. INSTALL 11.25° BEND (SAME SIZE AS PIPE).
21. INSTALL GATE VALVE PER UDACS PLATE NO. 39 AND 30 (SAME SIZE AS PIPE).
22. INSTALL 2" BALL VALVE IN *IRR. VALVE BOX*
23. INSTALL A 6" CAP PER UDACS PLATE NO. 31

SOUTHWEST GAS CORPORATION

SOUTHWEST GAS CORPORATION [signature] DATE 11/15/18

NOTE:

CONTRACTOR TO INCLUDE THE COST OF ANY VERTICAL CHANGE IN PIPE DUE TO GRADE CHANGES OR UTILITY CONFLICTS.

FIRE LANE NOTES:

1. PAINT ENTIRE FACE OF CURB RED PER STANDARDS.
2. INSTALL FIRE SIGN @ A MAXIMUM DISTANCE OF EVERY 100' ALONG THE FIRE LANE PER DETAIL ON C5.01
3. ENTRANCE WARNING SIGN PER DETAIL ON C5.01

FIRE ACCESS LEGEND:

24' WIDE FIRE TRUCK ACCESSIBLE ROUTE MIN TURNING RADIUS IS 28'/52'

NOTE:

CONTRACTOR TO INCLUDE COST OF UNDERGROUND UTILITY DETECTION COMPANY TO LOCATE AND MARK ALL EXISTING UTILITIES PRIOR TO ANY DEMOLITION OR EXCAVATION. ENGINEER TO BE PROVIDED WITH AS-BUILT SKETCH OF EXISTING UTILITIES, AND IS TO BE NOTIFIED IMMEDIATELY OF ANY POTENTIAL CONFLICTS WITH PROPOSED UTILITIES AND/OR FINISHED GRADES.

CITY OF LAS VEGAS FIRE DEPARTMENT APPROVAL

BY: [signature] DATE: 11/28/18

APPROVAL OF THESE PLANS SHALL NOT BE CONSTRUED TO BE A PERMIT FOR, OR AN APPROVAL OF, ANY VIOLATION OF ANY OF THE PROVISIONS OF THE STATE OR COUNTY LAWS. FIRE FLOW 2500 GPM AT 20 P.S.I. RESIDUAL.

FIRE DEPARTMENT APPROVAL

APPROVAL BY THE FIRE DEPARTMENT HAVING JURISDICTION IS REQUIRED PRIOR TO OBTAINING FINAL APPROVAL FROM THE LAS VEGAS VALLEY WATER DISTRICT.

APPROVED FOR CONSTRUCTION

[signature]
LAS VEGAS VALLEY WATER DISTRICT ENGINEERING SERVICES
PROJECT No. 125851 FIRST APPROVED DATE: 12-17-18
LVVWD APPROVED FIRE FLOW 2500 GPM AT 20 PSI RESIDUAL

FIRE HYDRANT RELOCATION & LATERAL ABANDONMENT: (EXISTING LATERAL TO BE ABANDONED)

WHERE SHOWN ON THE DRAWING(S), THE CONTRACTOR SHALL ABANDON THE EXISTING FIRE HYDRANT(S) BY REMOVING BOTH THE UPPER AND LOWER BARRELS OF THE FIRE HYDRANT SO THAT NO PORTION OF THE REMAINING FIRE HYDRANT ASSEMBLY IS CLOSER THAN TWO (2) FEET TO THE EXISTING GRADE. FIRE HYDRANTS SHALL BE TESTED PRIOR TO AND AFTER RELOCATION UNDER THE DIRECTION OF THE DISTRICT TO ENSURE QUALITY OF THE FIRE HYDRANT(S). THE EXISTING HYDRANT SHALL BE INSTALLED AT THE NEW LOCATION AS INDICATED ON THE DRAWINGS, IN ACCORDANCE WITH UDACS PLATE 40. THE EXISTING VALVE SHALL BE ABANDONED IN A CLOSED POSITION, UNLESS SHOWN OTHERWISE, BY REMOVING A MINIMUM OF THE TOP TWENTY-FOUR (24)INCHES OF THE VALVE BOX, AND THEN FILLING THE BOTTOM OF THE BOX WITH A MINIMUM OF EIGHT (8) INCHES OF SAND OR TYPE II AGGREGATE BASE, THE REMAINING PORTION OF THE VALVE BOX SHALL BE FILLED WITH CONCRETE HAVING A COMPRESSIVE STRENGTH OF THE AT LEAST TWO-THOUSAND (2,000) PSI. THE LATERAL SHALL BE CUT WITHIN ONE (1) FOOT OF THE ABANDONED VALVE, OR AS SHOWN ON PLANS, AND CAPPED. WHERE A JOINT OR COUPLING IN THE EXISTING PIPE IS UNCOVERED AT THE CUT AND CAP LOCATION, THE INSTALLATION OF A PLUG MAY BE PERMITTED, WITH DISTRICT APPROVAL. A CONCRETE THRUST BLOCK SHALL BE INSTALLED AT ALL CUT AND CAP LOCATION IN ACCORDANCE WITH THE PROVISIONS OF UDACS PLATE 31

WARNING FIRE LINE (NON-POTABLE WATER) ALL EXISTING, RELOCATED OR PROPOSED DCDA/RPDA INSTALLATIONS:

"TO COMPLY WITH THE FEDERAL SAFE DRINKING WATER ACT, THE FIRE LINE, OR ANY OF ITS COMPONENTS, SHALL NOT BE USED FOR POTABLE WATER AT ANY TIME."

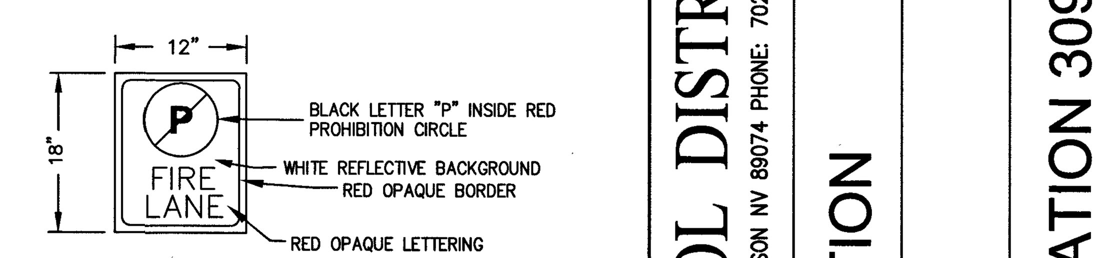

"FIRE LANE" SIGN N.T.S.

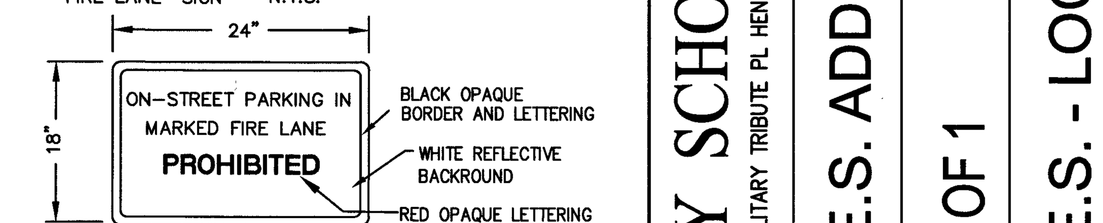

ENTRANCE WARNING SIGN N.T.S.

NOTE:

LOCHSA ENGINEERING ASSUMES NO RESPONSIBILITY FOR EXISTING UTILITY LOCATIONS AND ELEVATIONS. THE UTILITIES SHOWN ON THIS PLAN ARE FROM THE BEST AVAILABLE INFORMATION. IT IS THE CONTRACTOR'S RESPONSIBILITY TO FIELD VERIFY THE LOCATION AND ELEVATION OF ALL UTILITIES, INCLUDING BUT NOT LIMITED TO, THE WATER, FIRE, SANITARY SEWER, STORM SEWER, TELEPHONE, POWER, GAS, AND IRRIGATION LINES PRIOR TO THE COMMENCEMENT OF CONSTRUCTION. IF CONFLICT EXISTS IN THE FIELD, THE CONTRACTOR IS TO NOTIFY THE PROJECT ARCHITECT, OWNER'S REPRESENTATIVE AND THE PROJECT ENGINEER IMMEDIATELY.

A.P.N.:

137-25-310-002

BASIS OF BEARINGS:

SEE COVER SHEET

BENCHMARK:

CITY OF LAS VEGAS BENCHMARK
1LV0925C4 RIVET AND PLATE
IN TOP OF CURB AT SOUTHWEST CORNER OF CRESTDALE LANE AND RED FALLS LANES ELEVATION= 2941.51 FEET / 896.573 METERS

SAFETY ALERT
Call Before You Overhead 1-702-227-2929
AVOID HITTING UNDERGROUND TRAFFIC SIGNAL AND STREET LIGHT SYSTEM CONDUITS IT'S COSTLY
Call before you UnderGround 1-702-432-5300
FREEWAY AND ARTERIAL SYSTEM OF TRANSPORTATION 1-800-227-2600
Call before you dig. Avoid cutting underground utility lines. It's costly.
Call 811

LEGEND

CL OR SURVEY LINE	EASEMENT LINE	
PROPERTY LINE	SAWCUT LINE	
ROW LINE	SCARP LINE	

DESCRIPTION:	CONTOUR LINES	EDGE OF PAVEMENT	"A" TYPE CURBS	"L" TYPE CURBS	WALLS	FENCES	AC PAVEMENT	CONCRETE	SPOT ELEVATIONS	SIGNS	MANHOLE W/ DESCRIPTION	MANHOLE DESCRIPTIONS	FIRE HYDRANTS	GATE VALVES	REDUCERS	CLEAN OUTS	UTILITY BOX OR VAULT	BACKWATER VALVES	100w HPS STREETLIGHTS	150w HPS STREETLIGHTS
EXISTING:	(2210)								(12.34) BC		Ⓢ	Ⓢ = SANITARY SEWER; Ⓓ = STORM DRAIN		⊗	▷	○		BWV		
PROPOSED:	2122								12.34 BC		Ⓢ	Ⓔ = ELECTRICAL; Ⓣ = TELEPHONE			▶	●		BWV		

REVISIONS:

REV.	DESCRIPTION:	DATE:

SEAL: GUY M. MORRIS, PROFESSIONAL ENGINEER, STATE OF NEVADA, CIVIL, No. 14526, EXP. 12-31-19, 11/13/18

DATE: 11/13/18 | DRAWN BY: NMG | SUBMITTAL: MYLAR | A/E PROJECT NO. 171058

Gensler
3883 Howard Hughes Pkwy
Suite 650
Las Vegas NV 89169
Tel: 702.893.2800
Fax: 702.893.2805

Lochsa engineering
6345 South Jones Blvd.
Suite 100
Las Vegas, NV 89118
Phone (702) 365-9312
Fax (702) 365-9317
www.lochsa.com

A/E: | CONSULTANT:

CONSTRUCTION MGMT:	DATE:
PROJECT MANAGER:	
COORDINATOR:	
BUILDING DEPARTMENT:	
CODE COMPLIANCE:	
AHERA REVIEW:	

ASBESTOS WORK IS: REQUIRED ☐ NOT REQUIRED ☐

MPID: 0013529

CLARK COUNTY SCHOOL DISTRICT

CONSTRUCTION MANAGEMENT DEPARTMENT 1180 MILITARY TRIBUTE PL HENDERSON NV 89074 PHONE: 702-799-8710

PROJECT: JOHN W. BONNER E.S. ADDITION

DRAWING TITLE: UTILITY PLANS SHEET 1 OF 1

FACILITY: JOHN W. BONNER E.S. - LOCATION 309

SHEET NO: C5.01 715-210

PROJ#:125851 AGREE#:116476 QS:137-25-SW

11/14/2018 10:30 AM
T:\CAD\171058\Drawings\Plot Drawings\C-171058-UT.dwg

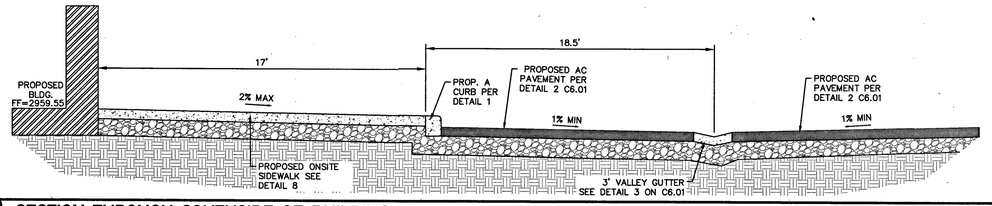

15 SECTION THROUGH SOUTHSIDE OF BUILDING — NOT TO SCALE

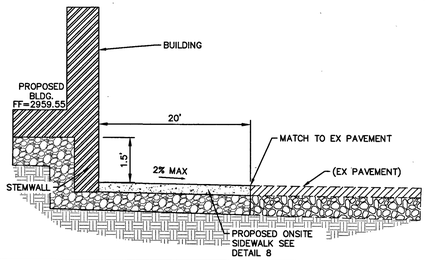

14 SECTION THROUGH EAST SIDE OF BUILDING — NOT TO SCALE

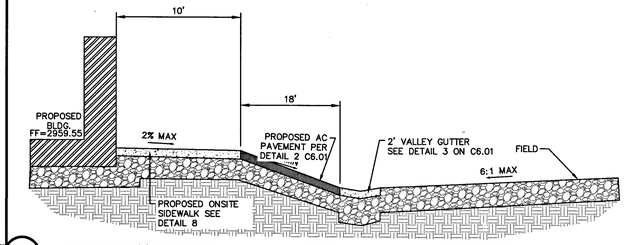

13 SECTION THROUGH NORTHSIDE OF BUILDING — NOT TO SCALE

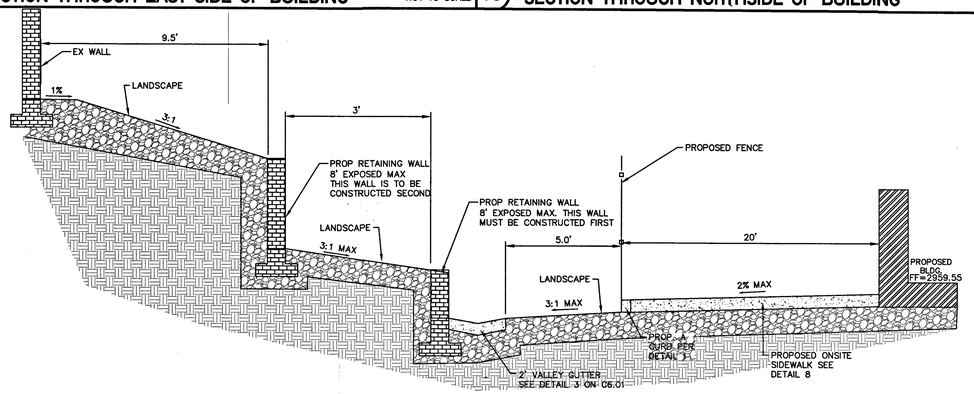

12 SECTION THROUGH WESTSIDE OF BUILDING. — NOT TO SCALE

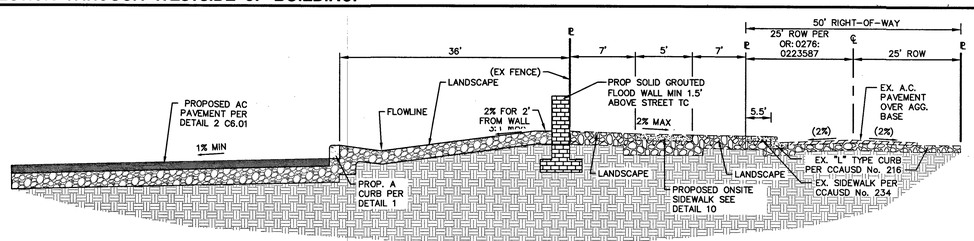

11 SECTION THROUGH PROPERTY LINE ON THE SOUTHSIDE — NOT TO SCALE

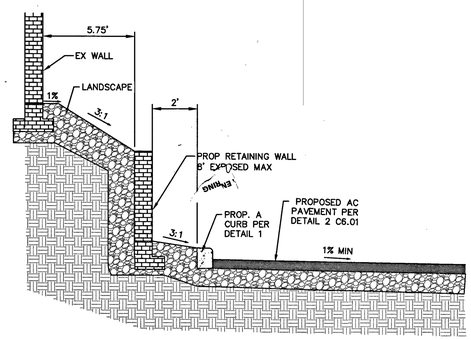

16 SECTION THROUGH WESTSIDE PARKING — NOT TO SCALE

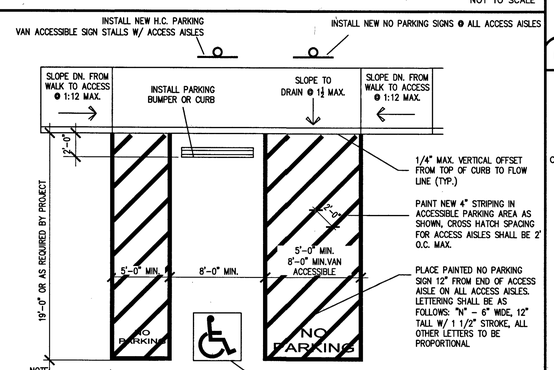

NOTE:
ALL AREAS WITHIN AN ACCESSIBLE ROUTE SHALL HAVE A CROSS SLOPE OF 1½ MAX. THE ACCESSIBLE ROUTE SHALL INCLUDE, BUT NOT BE LIMITED TO, ACCESSIBLE PARKING SPACES, ACCESS AISLES, & SIDEWALKS.

9 ACCESSIBLE PARKING DETAIL — NOT TO SCALE

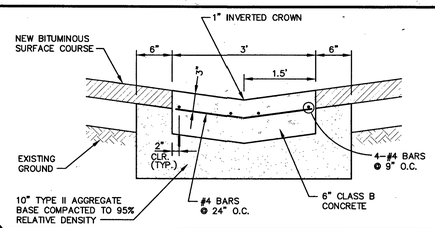

10 3' VALLEY GUTTER — NOT TO SCALE

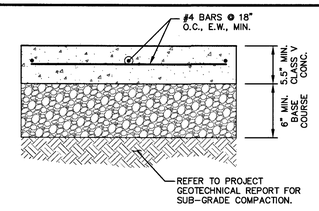

8 CONCRETE PAVEMENT SECTION (ON-SITE) — NOT TO SCALE

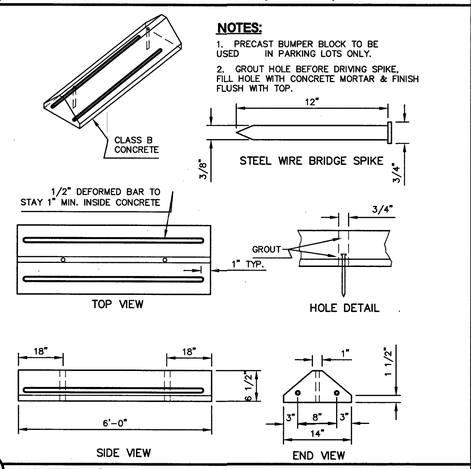

NOTES:
1. PRECAST BUMPER BLOCK TO BE USED IN PARKING LOTS ONLY.
2. GROUT HOLE BEFORE DRIVING SPIKE, FILL HOLE WITH CONCRETE MORTAR & FINISH FLUSH WITH TOP.

7 WHEEL STOP — NOT TO SCALE

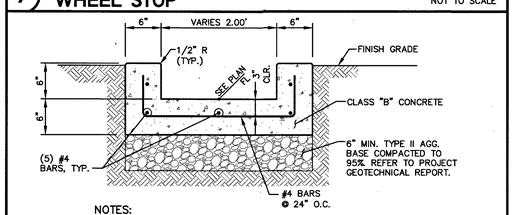

NOTES:
1. EXPANSION JOINTS REQUIRED AT ALL LOCATIONS WHERE CHANNEL MEETS CURB.
2. WEAKENED PLANE JOINTS REQUIRED AT 10' MAX. SPACING.
3. REFER TO PROJECT GEOTECHNICAL REPORT FOR TYPE II AGGREGATE OR SELECTED MATERIAL DEPTH AND COMPACTION, SUB-GRADE PREPARATION, MEMBRANES AND OTHER PLACEMENT RECOMMENDATIONS.

6 "U" CHANNEL — NOT TO SCALE

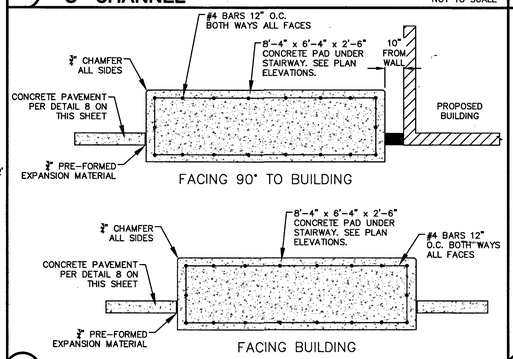

5 PROP. CONCRETE PAD UNDER STAIRWAY — NOT TO SCALE

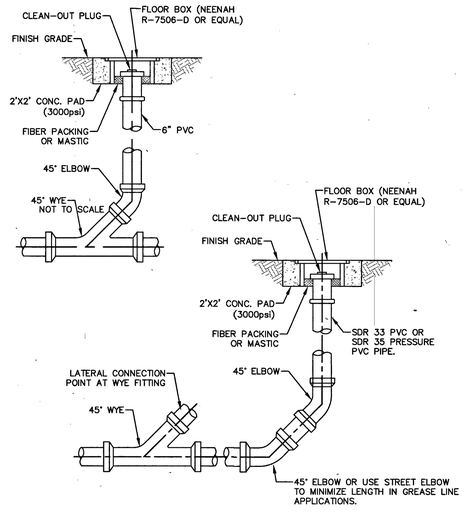

4 SEWER CLEAN-OUT — NOT TO SCALE

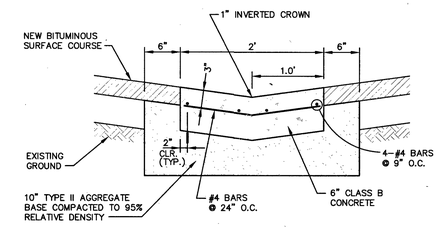

3 2' VALLEY GUTTER — NOT TO SCALE

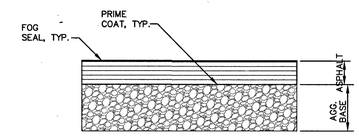

TYPE OF TRAFFIC	ASPHALT (inches)	TYPE II BASE COURSE (inches)
AUTOMOBILE PARKING	2.5	4
DELIVERY TRUCK	2.5	4
HEAVY DUTY TRUCK	3	4

1. REFER TO PROJECT GEOTECHNICAL REPORT FOR ALL SUB-GRADE PREPARATION AND COMPACTION.

PAVEMENT SECTION AS PROPOSED IN GEOTECHNICAL REPORT PREPARED BY: NINYO & MOORE PROJ. NO.: 304190001 DATED: SEPTEMBER 11, 2017

2 AC PAVEMENT SECTION — NOT TO SCALE

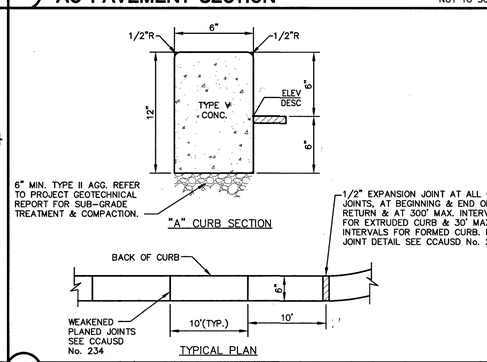

1 ON-SITE "A" TYPE CURB — NOT TO SCALE

REVISIONS:

REV.	DESCRIPTION:	DATE:

SEAL: PROFESSIONAL ENGINEER - STATE OF NEVADA — GUY M. MORRIS — EXP. 12-31-19 — CIVIL — No. 14526 — 11/13/18

DATE: 11/13/18
DRAWN BY: NMG
SUBMITTAL: MYLAR
A/E PROJECT NO. 171058

A/E: Gensler
3883 Howard Hughes Pkwy
Suite 650
Las Vegas, NV 89169
Tel: 702.893.2800
Fax: 702.893.2805

CONSULTANT: Lochsa engineering
6345 South Jones Blvd.
Suite 100
Las Vegas, NV 89118
Phone (702) 365-9317
Fax (702) 365-9317
www.lochsa.com

CONSTRUCTION MGMT:	DATE:
PROJECT MANAGER:	
COORDINATOR:	
BUILDING DEPARTMENT:	
CODE COMPLIANCE:	
AHERA REVIEW:	

ASBESTOS WORK IS:
REQUIRED ☐ NOT REQUIRED ☐

MPID: 0013529

CLARK COUNTY SCHOOL DISTRICT
CONSTRUCTION MANAGEMENT DEPARTMENT 1180 MILITARY TRIBUTE PL HENDERSON NV 89074 PHONE: 702-799-8710

PROJECT: JOHN W. BONNER E.S. ADDITION
DRAWING TITLE: DETAIL SHEETS SHEET 1 OF 3
FACILITY: JOHN W. BONNER E.S. - LOCATION 309

SHEET NO: C6.01 — 715-210
SHEET 8 OF 15 L18-02468

11/14/2018 10:33 AM
T:\CAD\171058\Drawings\Plot Drawings\C-171058-601-D7.dwg

General

1. The Contractor shall verify all dimensions prior to starting construction. The Architect shall be notified of any discrepancies or inconsistencies.
2. Notes and details on the drawings shall take precedence over these general notes, typical details, and the project specifications.
3. All work shall conform to the minimum standards of following codes:

   The 2012 edition of the International Building Code (IBC), and other regulating agencies which have authority over any portion of the work, and those codes and standard listed in these notes.
4. The contract Structural drawings and specifications represent the finished structure. They do not indicate the method of construction.
5. All specifications and codes noted shall be the latest approved editions and revisions by the governmental agency having jurisdiction over this project.
6. Contractor shall investigate the site during clearing and earth work operations for filled excavations or buried structures such as cesspools, cisterns, foundations, utilities, etc. If any such structures are found, the Structural Engineer shall be notified immediately.
7. IBC Lateral Loads:

Earthquake Design Data:			
Spectral Response Coefficients			
Sds	0.424g	Sd1	0.229g
Mapped Spectral Response Acceleration			
Ss	0.438g	S1	0.159g
Soil Factor Coefficients			
Fa	1.449	Fv	2.164

8. ACI 318–11 table 4.3.1 Sulfate Exposure (See General Notes – Concrete Item #3 for concrete water cement ratio limits): S1 (MODERATE)

Foundation

1. The design of the foundation system is based on the geotechnical report (and any addenda) prepared by the following company:

Company:	Ninyo & Moore
Report no:	304190001
Dated:	09–11–2017

   Copies are available for review at the Architect's office and Contractor shall have a copy at the jobsite.
2. The foundation system is designed based on the following:

Allowable Soil Bearing Pressure Continuous Footings	2800 psf *
Active Earth Pressure	36 PCF
Passive Pressure	375 PCF
Friction Coefficient	0.64

   a ⅓ increase is allowed for Seismic or Wind Loading where asterisk (*) is indicated.
3. The Contractor shall provide for proper dewatering of excavations from surface water, ground water, seepage, etc.
4. The Contractor shall provide for the installation and design of all cribbing, sheathing and shoring required to safely and adequately retain the earth banks and support any existing structures in accordance with all national, state and local safety ordinances.
5. All abandoned utilities, footings, etc., that interfere with the new construction shall be removed. Notify the Civil Engineer should any foundations for existing structures be encountered that are not shown on the structural drawings.
6. Footings shall be placed and estimated according to depths shown on the drawings. Excavations for footings shall be approved by the Geotechnical Engineer prior to placing the concrete and reinforcing. The Contractor shall notify the Geotechnical Engineer when the excavations are ready for inspection. The Geotechnical Engineer shall submit a letter of compliance to the Owner. Should soil encountered at these depths not be approved by the Geotechnical Engineer, footing elevations or footing designs will be altered by change order.
7. All excavations shall be properly backfilled. Footing backfill and utility trench backfill within the building perimeter shall be mechanically compacted in layers, to the approval of the Geotechnical Engineer. See geotechnical report for requirements. Flooding will not be permitted.
8. The Contractor shall not backfill behind retaining walls before the concrete or masonry walls have reached full design strength. The Contractor shall brace or protect all building and pit walls below grade from lateral loads until attaching floors are completely in place and have reached full design strength. The Contractor shall provide for the design, any required permits and the installation of such bracing and protection with the requirements of IBC section 1704.

Reinforcing Steel (for Concrete and Masonry)

1. All reinforcing steel shall be detailed and placed in accordance with the 'Building Code Requirements for Reinforced Concrete' and the 'Manual of Standard Practice for Reinforced Concrete Construction' by CRSI and WCRSI as modified by the project drawings and specifications.
2. Deformed reinforcing bars shall conform to the requirements of ASTM A615 grade 60 and ASTM A706 grade 60 for deformed weldable bars.
3. All reinforcing bar bends shall be made cold.
4. Lap splices shall be made only where shown on the structural drawings.
5. Reinforcing dowels between footings and walls or columns shall be the same number, size, spacing and grade as the specified vertical reinforcing, u.n.o.
6. All reinforcing bars shall be marked so their identification can be made when the final in–place inspection occurs.

Concrete

1. All aspects of work pertaining to the concrete construction shall be in accordance with ACI 318–11, 'Building Code Requirements for Structural Concrete' and the latest edition of 'Specifications for Structural Concrete for Buildings', ACI 301, with modifications as noted on the project drawings and\or specifications.
2. Concrete mix designs shall be submitted to the Structural Engineer for review. All mix designs shall be designed by a qualified testing laboratory and shall be wet stamped by a Civil Engineer licensed in the State of NEVADA. Base design mix on field experience or trial mixtures as stipulated in ACI 318 Section 5.3
3. Portland cement shall conform to ASTM C150 Type V where the concrete is in contact with soil. Concrete that will be exposed to sulfate–containing solutions shall comply with ACI 318 chapter 4. Severe and Very Severe sulfate exposures as identified in the project geotechnical report, the water cement ratio shall not exceed 0.45 and shall not exceed 0.50 for Moderate sulfate exposure. Type II cement shall be used at all other locations in the structure.
4. Fly ash may be used in concrete mixes. The fly ash shall conform to ASTM C618 Class F. The loss of ignition shall be limited to 2%. The addition rate for fly ash shall be limited to 15% of the cement weight. The Contractor shall submit all certificates showing the fly ash is in accordance with the above criteria.
5. All concrete exposed to freeze – thaw cycles shall contain 6% +/– 1% of entrained air.
6. Hard rock concrete – aggregate shall conform to all requirements and tests of ASTM C33 and project specifications. Exceptions may be used only with approval of the Structural Engineer. Provide concrete mix design with proven shrinkage characteristics of less than 0.0005 inches/inch.
7. Structural concrete 28–day strengths & types are as follows:

Location of Concrete	Strength, psi	Type
Retaining walls	4500	Hard Rock
Footings	4500	Hard Rock

8. Concrete mixing operations, etc., shall be in accordance with ASTM C94.
9. Concrete placement shall be in accordance with ACI standard 304 and project specifications. Provide keys in construction joints unless detailed otherwise. Thoroughly clean, remove laitance and thoroughly wet and remove standing water in construction joints before placing new concrete. At vertical joints, slush with a coat of neat cement before placing new concrete.
10. Roughen concrete surface to a full amplitude of 1/4 inch where masonry walls intersect concrete or where new concrete interfaces with existing concrete.
11. Clear coverage of concrete over reinforcing bars shall be as follows:

Location of Concrete	Minimum Concrete Cover
Concrete cast against and permanently exposed to earth	3"
Concrete exposed to earth or weather: #6 through #18 bar / #5 bar and smaller	2" / 1 1/2"
Concrete not exposed to weather or in contact with ground, UNO: Slabs, walls, joists: #14 and #18 bar. / #11 bar and smaller.	1 1/2" / 3/4"
Beams, columns: Primary reinforcing, ties stirrups, spirals.	1 1/2"
Slab on grade:	2" clear from top

12. Prior to concrete placement, all reinforcing bars, anchor bolts and other concrete inserts shall be well secured in position.

Masonry

1. The masonry units shall conform to ASTM C90 grade N–1 and ASTM Standard C90–09.
2. Mortar and grout shall comply with the provisions of Section 2103 of the IBC
3. Mortar mix shall conform to requirements for ACI 530.1–11 Table SC–1, Type S, and project specifications.
4. Grout shall be coarse grout and shall comply with ACI 530.1–11 and ASTM C476–10. Use sufficient water for grout to flow into all joints of the masonry without segregation.
5. Cement – see notes under 'CONCRETE' for requirements and type of cement.
6. The design strength f'm shall be 1500 psi unless noted otherwise in the drawings. The f'm shall be verified by the prism method (IBC Section 2105.3).

   The minimum required 28–day compressive strengths for grout, mortar, and block shall be as follows:

Masonry Design Strength						
f'm =	1500 psi	2000 psi	2500 psi	3000 psi	3500 psi	4000 psi
Grout	2000 psi	2500 psi	3125 psi	3750 psi	4375 psi	5000 psi
Mortar	1800 psi Type S	1800 psi Type S	2500 psi Type M	2500 psi Type M	2500 psi Type M	2500 psi Type M
Block(*)	2000 psi	2500 psi	3125 psi	3750 psi	4375 psi	5000 psi

   * Minimum compressive strength at 28–days on the net area.
   Note: These strengths are minimum requirements only. If greater strengths are required to reach the required f'm for the combined system, these greater strengths shall be used.
7. Mortar and grout mix designs shall be submitted to the Structural Engineer for review. All mix designs shall be designed by a qualified testing laboratory and be wet stamped by a Civil Engineer licensed in the State of Nevada.
8. Testing data by a qualified testing laboratory for the masonry block shall be submitted to the Structural Engineer for review.
9. All masonry shall be solid grouted unless noted otherwise on the drawings.
10. Refer to architectural drawings for surface and height of units, laying pattern and joint type.
11. Grout lift provisions shall be in accordance with ACI 530.1–11 Masonry Standards S–66 Section 3.5.
12. Reinforcing bars shall be ASTM A615, Grade 60, unless noted otherwise. See notes under 'reinforcing steel' for additional requirements.
13. Placement of reinforcing bars shall conform to ACI 530.1–11 Masonry standards S–58 Section 3.4. A minimum of 1/2 inch grout between the main reinforcing and masonry units shall be provided.
14. Minimum dimensions of grout spaces and cells shall be in accordance with ACI 530.1–11, S–66, Table 7. All cells shall be in vertical alignment and footing dowels shall align with cells containing vertical reinforcing steel.
15. For reinforcing bar tension development and lap splice lengths in CMU see typical detail 7/–. For reinforcing bar placement in CMU cells see typical detail 8.
16. Coring openings in grouted masonry is not permitted.
17. No pipes or electrical conduit shall pass through masonry lintels unless specifically detailed.
18. Mechanical pipes and electrical conduits which pass through masonry walls do not require sleeves, unless otherwise indicated in the project specifications, mechanical and/or electrical drawings. If sleeves are required, install sleeves before grouting. Do not cut any reinforcing which may interfere with sleeve placement. Notify the Structural Engineer in advance of conditions not shown on the structural drawings.

3 TENSION LAP SPLICE (IN CONCRETE) — NOT TO SCALE

BAR SIZE	LAP CLASS	f'c = 4500 psi TOP BARS CASE 1	TOP BARS CASE 2	OTHER BARS CASE 1	OTHER BARS CASE 2
#3	A	18	27	14	21
	B	23	34	18	27
#4	A	24	35	18	27
	B	31	46	24	35
#5	A	29	44	23	34
	B	38	57	29	44
#6	A	35	53	27	41
	B	46	68	35	53
#7	A	51	77	40	59
	B	67	100	51	77
#8	A	59	88	45	68
	B	76	114	59	88
#9	A	66	99	51	76
	B	85	128	66	99
#10	A	73	109	56	84
	B	95	142	73	109
#11	A	80	120	62	93
	B	104	156	80	120

NOTES:
1. Table for use with normal weight hardrock concrete and grade 60 uncoated reinforcing bars. For lightweight aggregate use 1.3ℓ
2. Class A – Half or less of the bars are spliced within a required lap length. Class B – More than half of the bars are spliced within a required lap length.
3. Top bars are horizontal bars with 12" or more of concrete cast in the member below the bar.
4. For bars enclosed in standard column spirals, use 0.75ℓ or 12" min.
5. Lap splices of individual bars with a bundle shall be 1.2ℓ for that bar in a 3–bar bundle and 1.33ℓ for a 4–bar bundle. Entire bundles shall not be lap spliced at the same location. Splices for individual bars within a bundle shall be staggered such that they do not overlap.
6. ℓ – Basic lap length, shown at left.
7. Case Selection
   –For foundation reinforcement use Case1 uno.
   –For column reinforcement and dowels use case 1 uno.
   –For beam reinforcement use Case1 uno.
   –For structural slab reinforcement use Case2 uno.
   –For slab on grade reinforcement use Case1 uno.
   –For wall reinforcement and dowels use Case1 (Except as noted below) uno.
   –For walls with a single mat of steel centered in the wall, use Case1 for wall reinforcement and dowels uno.
   –For chord steel reinforcement use Case2 uno.

NOTES:
1. CONCRETE ONLY (IN INCHES) FOR GRADE 60 UNCOATED BARS

2 BAR BENDS — NOT TO SCALE

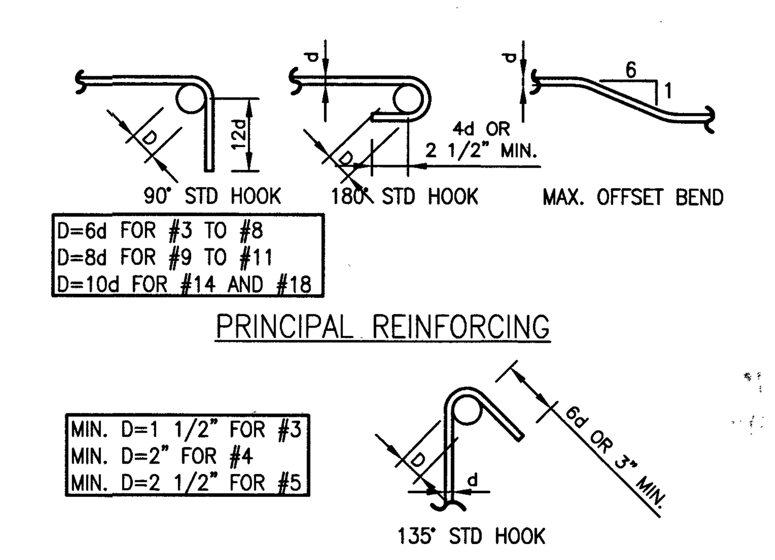

NOTES:
1. All bends shall be made cold.
2. #14 and #18 bars shall be bend tested and lab approved prior to bending.

1 CMU WALL INTERSECTIONS — NOT TO SCALE

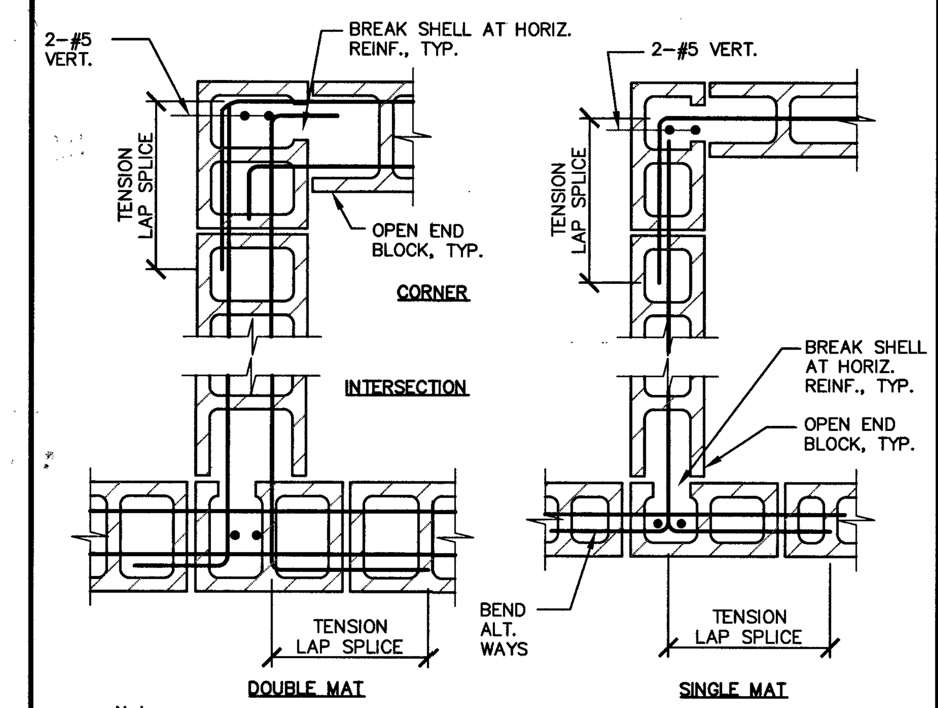

Notes:
1. Tension lap splice per schedule 7/–.

6 STEPPED FOOTING (IN CONCRETE) — NOT TO SCALE

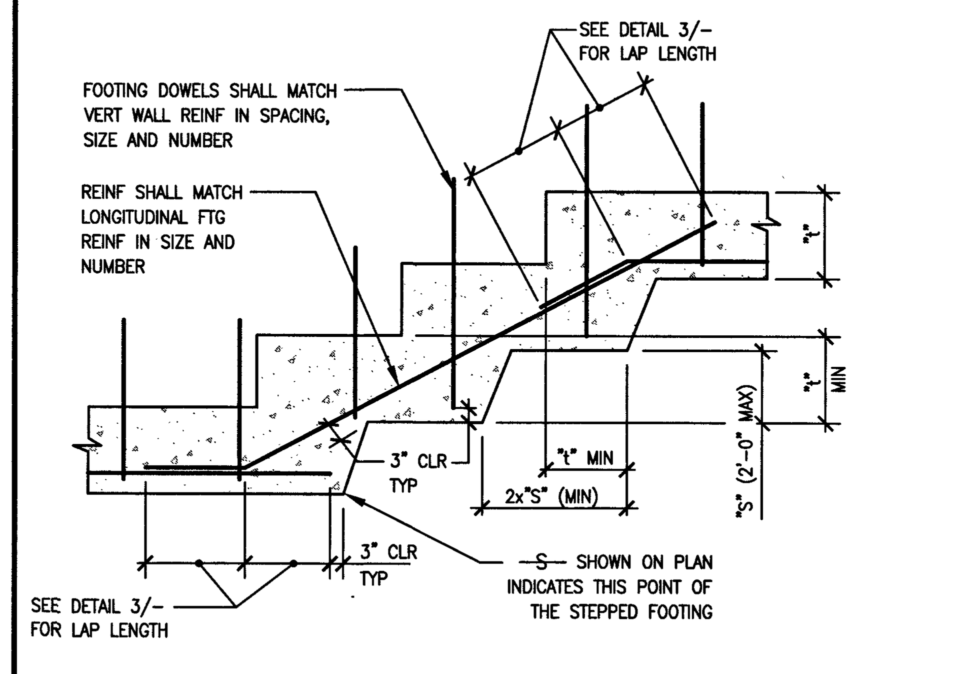

5 CONCRETE STAIR ON GRADE — NOT TO SCALE

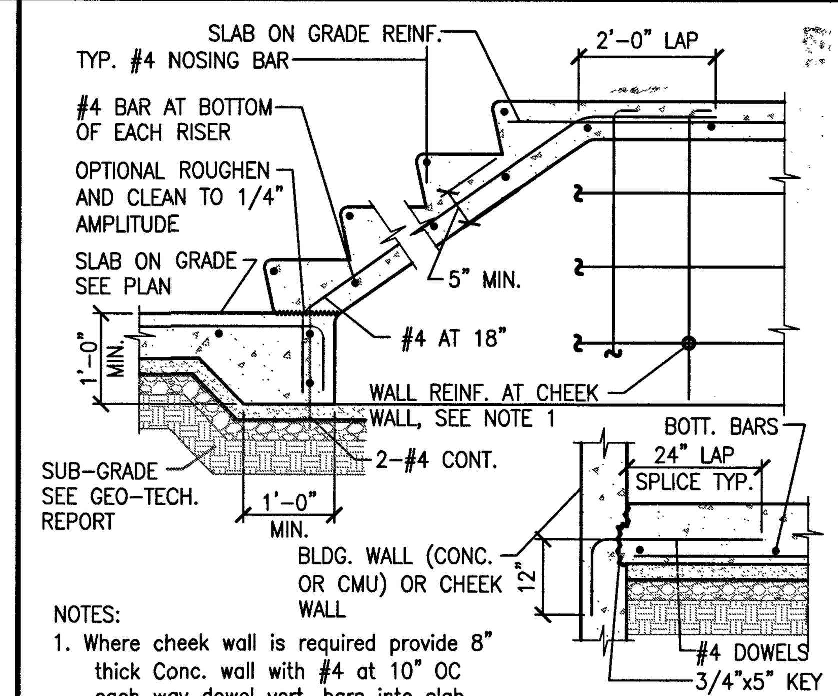

NOTES:
1. Where cheek wall is required provide 8" thick Conc. wall with #4 at 10" OC each way dowel vert. bars into slab.

4 CMU VERTICAL WALL JOINTS — NOT TO SCALE

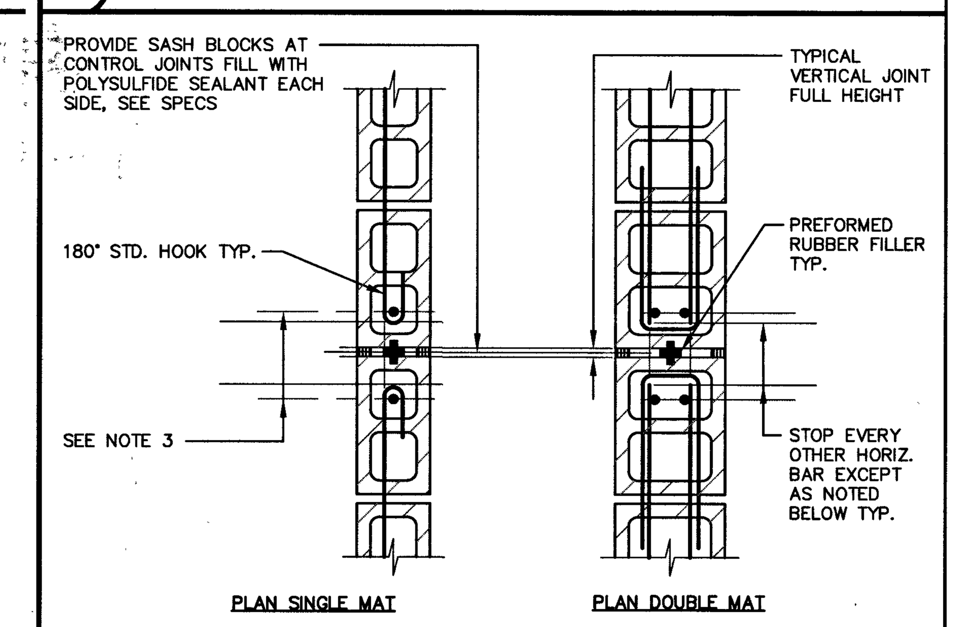

NOTES:
1. Contractor shall obtain architect's approval of joint locations, which shall not exceed 24'–0" oc.
2. Horizontal reinf. at floor lines, roof lines, lintel reinf. and every other horiz. bar (or bar set) shall be continuous through joint.
3. Provide vertical wall reinf. each side of joint, #5 bars min.

WALL NOTES

1. SEE DETAIL 4/– FOR WALL JOINT.
2. STRUCTURAL FILL, SEE GEOTECHNICAL REPORT FOR REQUIREMENTS.
3. APPLY ECOBASE II OR APPROVED EQUIVALENT FOR BASE PROTECTION AND PROTECT WITH DELTA MS DRAIN FABRIC OR APPROVAL EQUIVALENT. EXTEND WEEP HOLES THROUGH DELTA MS DRAIN FABRIC INTO FREE DRAINING BACKFILL. SEAL ALL CRACK CONTROL/EXPANSION JOINTS WITH A BACKER ROD AND FLEXIBLE JOINT SEALANT ON FRONT AND BACK OF WALL.
4. PROVIDE DOWELS TO MATCH SIZE AND SPACING OF VERTICAL WALL REINFORCEMENT, FOR LAP LENGTH IN CMU SEE 7/–. FOR LAP LENGTH IN CONCRETE SEE DETAIL 3/–.
5. CONTRACTOR TO PROVIDE SHORING FOR WALL PRIOR TO BACKFILLING UNTIL WALL HAS REACHED DESIGN STRENGTH.

NOTE: APPROVAL OF L–18–02468 DOES NOT CONSTITUTE APPROVAL OF STRUCTURAL DESIGN

7 TENSION DEVELOPMENT AND LAP SPLICE LENGTH (FOR MASONRY ONLY) — NOT TO SCALE

Tension Development and Lap Splice Length (for Masonry only)

CMU Thickness	Masonry Design Strength / BAR SIZE (Placement of Bar)	f'm = 1500 psi Center	Edge
8"	#3	12	13
	#4	14	24
	#5	22	38
	#6	43	74
	#7	59	92
	#8	91	121
	#9	118	NP

NOTES:
1. All lengths are in inches.
2. For bar placement, edge distance (d Dim.) see detail 8/–.
3. Where 2 bars per cell occur they shall be placed per edge condition see note 2.
4. 6" CMU 2 bars per cell is not permited. 8" CMU 2 bars per cell up to #5 are permitted. 10" CMU 2 bars per cell up to #7 are permitted.
5. NP indicates Not Permitted.
6. #10 and #11 bars where shown on plans or details require a mechanical splice.

8 PLAN DETAIL FOR REBAR PLACEMENT IN CMU — NOT TO SCALE

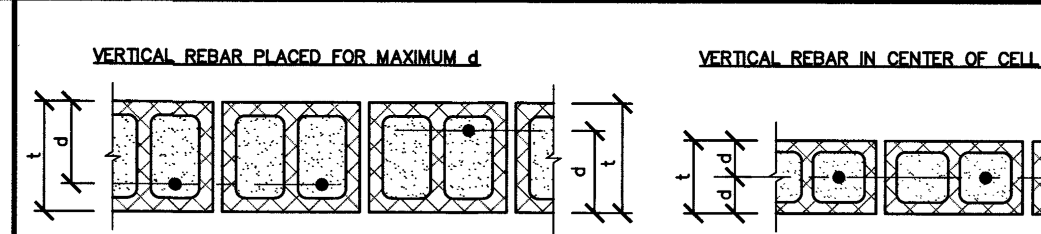

CMU (Concrete Masonry Units)

NOMINAL THICKNESS	ACTUAL THICKNESS (t)	d (inches) #3–#6	#7	#8	#9
6" CMU	5 5/8"	3.25	NP	NP	NP
8" CMU	7 5/8"	5.25	5	4.625	NP
10" CMU	9 5/8"	7.25	7	6.625	6.25
12" CMU	11 5/8"	9.25	9	8.625	8.25
16" CMU	15 5/8"	13.25	13	12.625	12.25

Concrete Masonry Unit

NOMINAL THICKNESS	ACTUAL THICKNESS (t)	d (inches)
6" CMU	5 5/8"	2.8
8" CMU	7 5/8"	3.8
10" CMU	9 5/8"	4.8
12" CMU	11 5/8"	5.8
16" CMU	15 5/8"	7.8

NOTE:
1. Where vertical reinforcing bars occur in a cell, bars shall be secured in place by a bar positioner at the top and bottom, and at the intervals not exceeding 200 diameters.

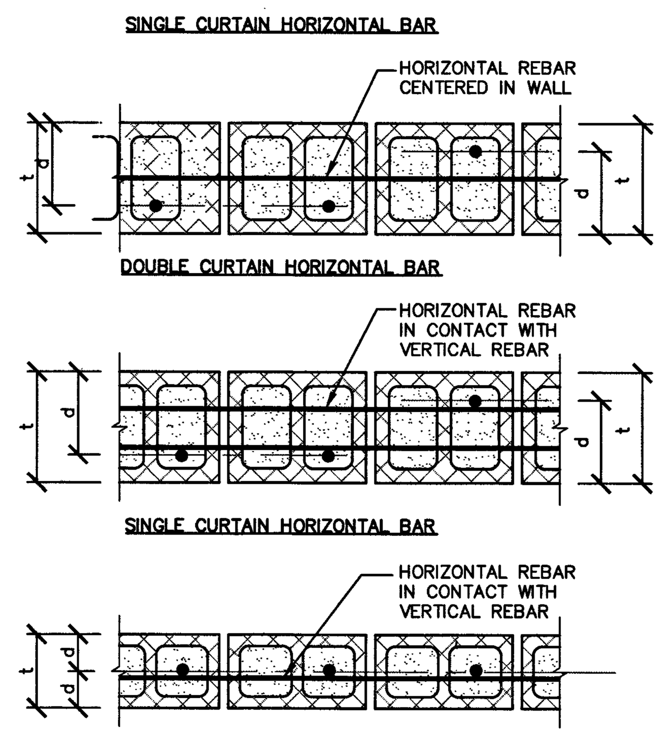

6' 5'–0" MAX. CMU REATINGING WALL SECTION — NOT TO SCALE

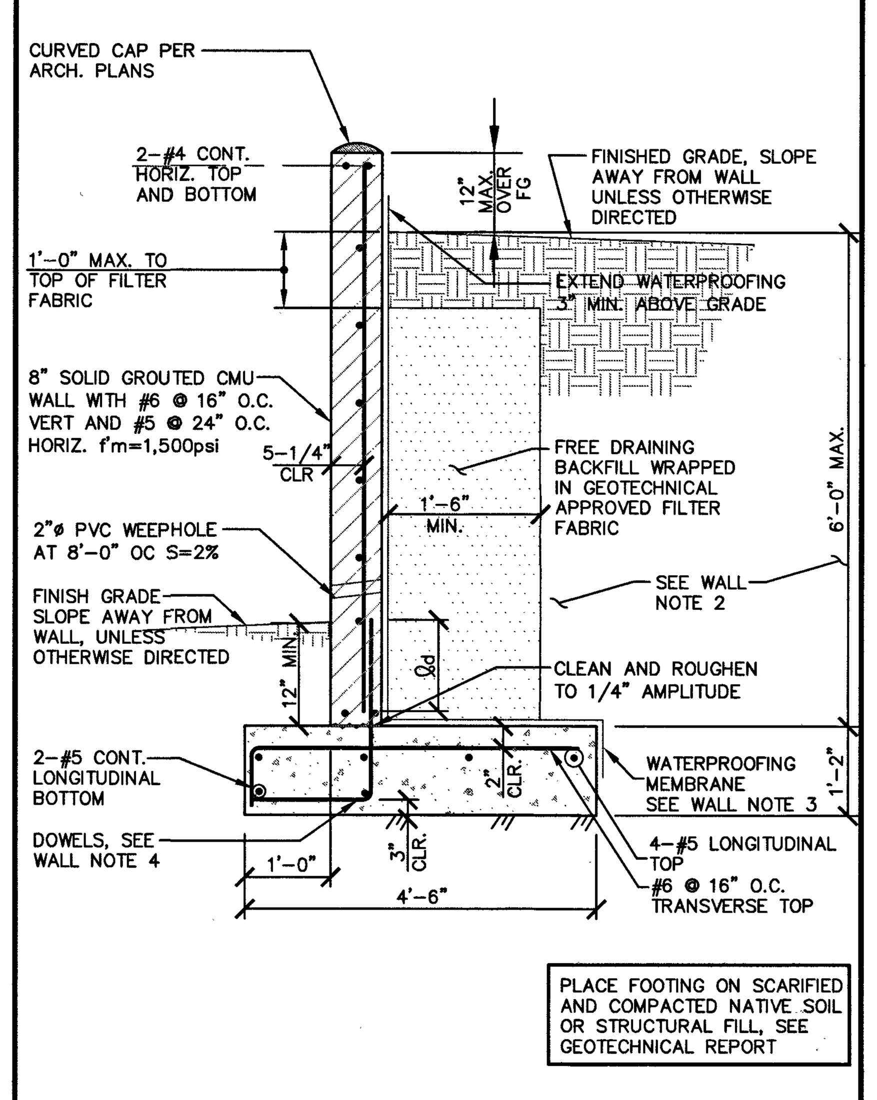

10 5' MAX. CMU RETAINING + 6'–0" SCREEN WALL — NOT TO SCALE

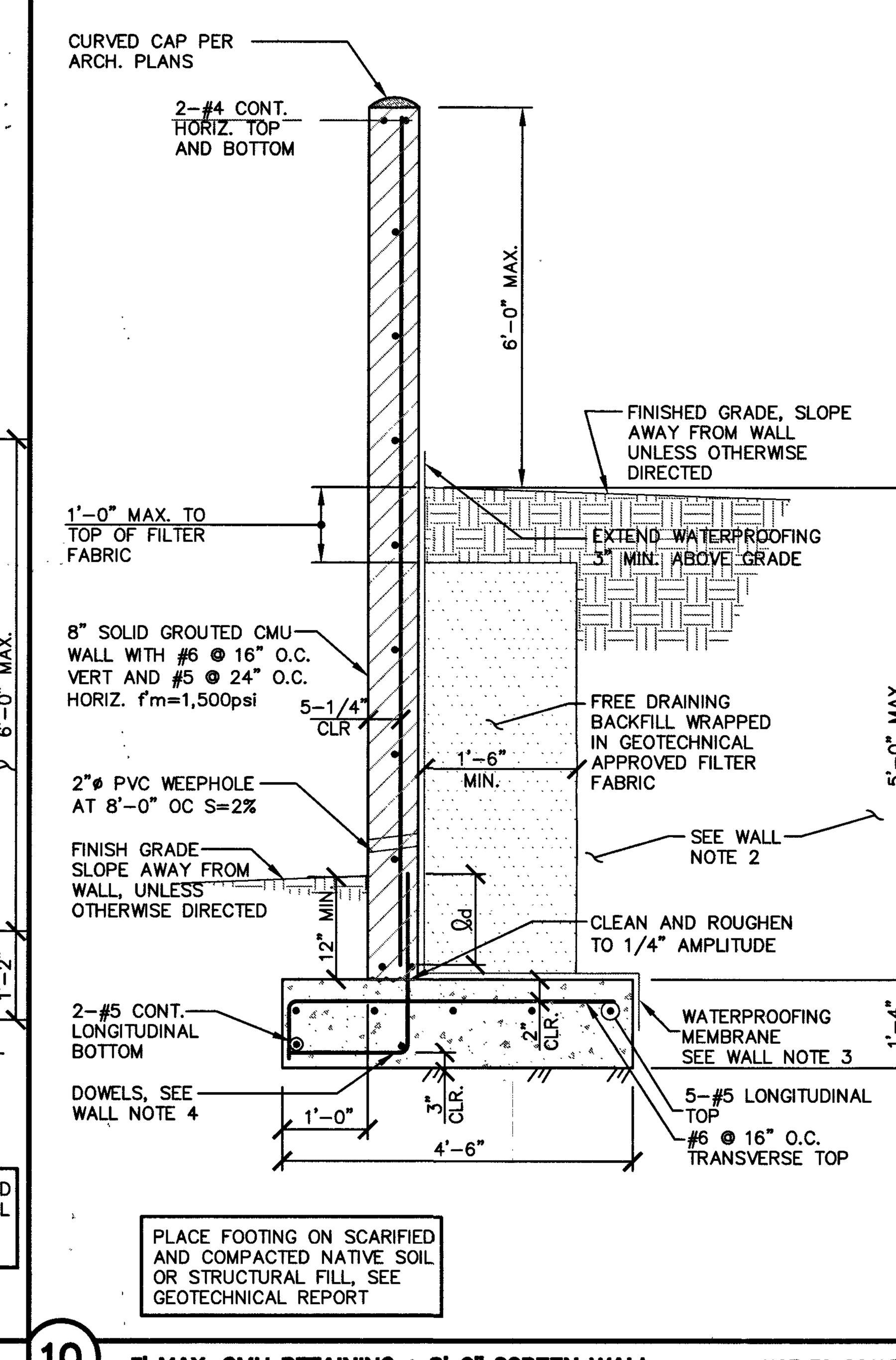

Quality Assurance and Special Inspection

Testing Laboratory: Retained by owner and satisfactory to Architect/Structural Engineer and governing code authority to perform required tests and inspections of this contract and applicable code.

Material Certification: Submit laboratory test reports certifying materials are of identifiable tested stock to owner, testing laboratory, Architect/Structural Engineer and, upon request, to governing code authority. If laboratory test reports cannot be made available, testing laboratory will perform tests as directed by Architect/Structural Engineer. Contractor shall pay testing laboratory for costs related to tests and inspections of unidentifiable materials or materials furnished without laboratory test reports, materials found deficient after initial tests and inspections, or materials replacing deficient materials.

Concrete.

1. Testing laboratory will review concrete mix design data and will perform the following concrete tests at frequency indicated in IBC section 1905.6:
   (a) Slump tests in compliance with ASTM C143.
   (b) Prepare four test cylinders for compressive strength testing in compliance with ASTM C39, ACI 318 and IBC section 1905.6. Test one cylinder at 7 days, two cylinders at 28 days and retain remaining cylinder for tests until completion of project. Determine concrete compressive strength at 28 days based on average of two cylinders tested.
   (c) Entrained air content in compliance with ASTM C231 for air entrained concrete.
2. Reinforcing:
   (a) During placement
3. Structural masonry.
4. Ten percent of drilled–in, epoxy, or grout set anchors shall be proof tested to 2 times allowable tension. Notify Architect/Structural Engineer of any failures so additional testing of adjacent anchors can be directed.
5. Excavation and back–filling.

All special inspection shall be performed in accordance with the requirements of IBC section 1704.

REVISIONS:

REV.	DESCRIPTION:	DATE:

SEAL: PROFESSIONAL ENGINEER – STATE OF NEVADA – GUY M. MORRIS – EXP. 12–31–19 – CIVIL – No. 14526 – 11/13/18

DATE: 11/13/18 | DRAWN BY: NMG | SUBMITTAL: MYLAR | A/E PROJECT NO. 171058

A/E: Gensler – 3883 Howard Hughes Pkwy, Suite 650, Las Vegas NV 89169, Tel: 702.893.2800, Fax: 702.893.2805

CONSULTANT: Lochsa engineering – 6345 South Jones Blvd. Suite 100, Las Vegas, NV 89118 – Phone (702) 365-9312, Fax (702) 365-9317, www.lochsa.com

CONSTRUCTION MGMT:	DATE:
PROJECT MANAGER:	
COORDINATOR:	
BUILDING DEPARTMENT:	
CODE COMPLIANCE:	
AHERA REVIEW:	

ASBESTOS WORK IS: REQUIRED ☐ NOT REQUIRED ☐

MPID: **0013529**

CLARK COUNTY SCHOOL DISTRICT
CONSTRUCTION MANAGEMENT DEPARTMENT 1180 MILITARY TRIBUTE PL HENDERSON NV 89074 PHONE: 702–799–8710

PROJECT: JOHN W. BONNER E.S. ADDITION

DRAWING TITLE: DETAIL SHEETS SHEET 2 OF 3

FACILITY: JOHN W. BONNER E.S. - LOCATION 309

SHEET NO: C6.02 — 715-210

SHEET 9 OF 15 L18–02468

11/14/2018 10:30 AM
T:\CAD\171058\Drawings\Plot Drawings\C–171058–602–DT2.dwg

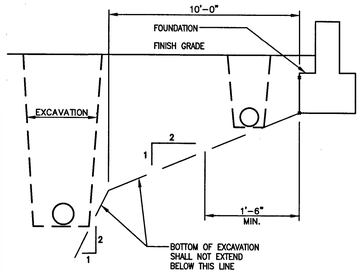

FOUNDATION PARALLEL TO EXCAVATION

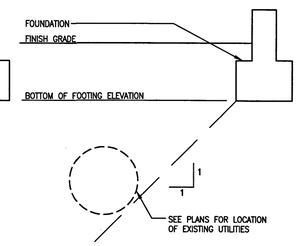

EXISTING UTILITY PARALLEL TO FOUNDATION

NOTES:
1. Contractor shall locate bottom of excavation to avoid surcharge on utilities and other foundations.
2. Contractor shall coordinate all excavations with foundation requirements.
3. Step foundation as required per detail 6/C6.02.
4. Contractor shall adhere to the recommendations in the Geotechnical Report and the General Notes, for all excavations, backfill requirements etc.
5. Pipes passing through footings: Less than 3'-0" below foundation, provide sleeve and concrete. More than 3'-0" below foundation, step foundation per detail 6/C6.02 to maintain 3'-0" Maximum.
6. Sleeves shall be minimum 1" clear all around pipes, conduit etc.
7. For pipes etc. within the footing thickness, step footing as required to pass pipes through stem wall.

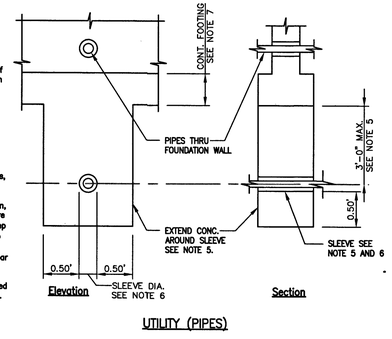

UTILITY (PIPES)

1 FOUNDATION ADJACENT TO EXCAVATIONS AND UTILITIES NOT TO SCALE

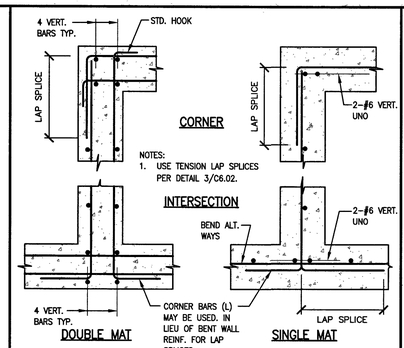

2 CONCRETE WALL INTERSECTIONS NOT TO SCALE

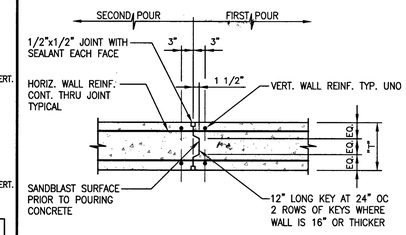

PLAN VIEW OF CONSTRUCTION JOINT

NOTES:
1. Provide construction joints at 40'-0" OC maximum.
2. Location of joints shall be approved by the Architect prior to constructing forms or placing concrete.

3 VERTICAL WALL CONSTRUCTION JOINT NOT TO SCALE

WALL NOTES

1. SEE DETAIL 3/— FOR WALL JOINT.
2. STRUCTURAL FILL, SEE GEOTECHNICAL REPORT FOR REQUIREMENTS.
3. APPLY ECOBASE II OR APPROVED EQUIVALENT FOR BASE PROTECTION AND PROTECT WITH DELTA MS DRAIN FABRIC OR APPROVAL EQUIVALENT. EXTEND WEEP HOLES THROUGH DELTA MS DRAIN FABRIC INTO FREE DRAINING BACKFILL. SEAL ALL CRACK CONTROL/EXPANSION JOINTS WITH A BACKER ROD AND FLEXIBLE JOINT SEALANT ON FRONT AND BACK OF WALL.
4. PROVIDE DOWELS TO MATCH SIZE AND SPACING OF VERTICAL WALL REINF. FOR LAP LENGTH IN CONCRETE SEE DETAIL 3/C6.02.

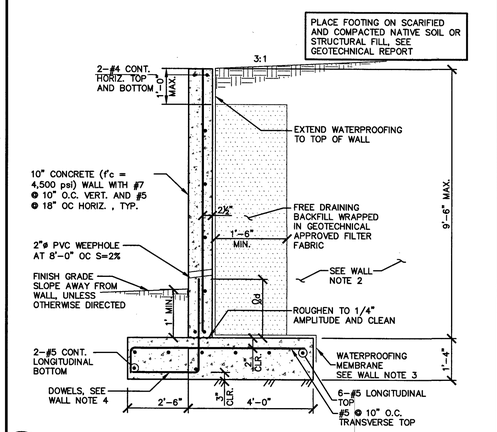

4 RETAINING WALL SECTION AT MIDDLE WALL NOT TO SCALE

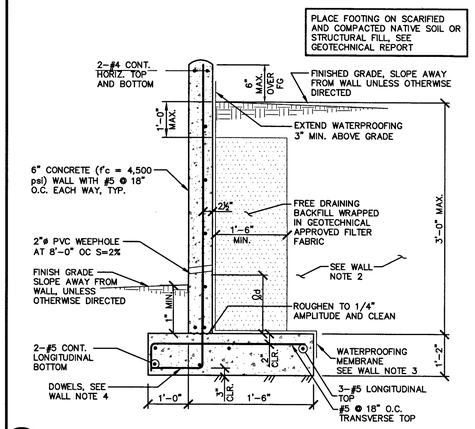

5 RETAINING WALL SECTION AT STAIR/RAMP NOT TO SCALE

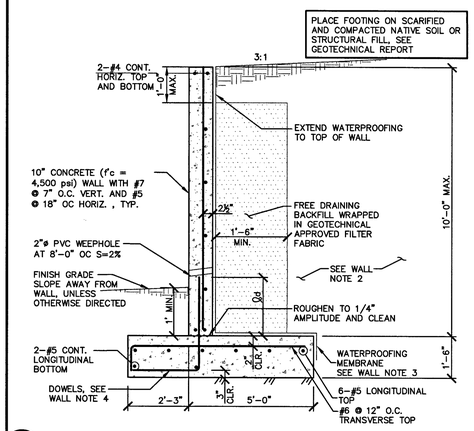

6 RETAINING WALL SECTION LOWER WALL NOT TO SCALE

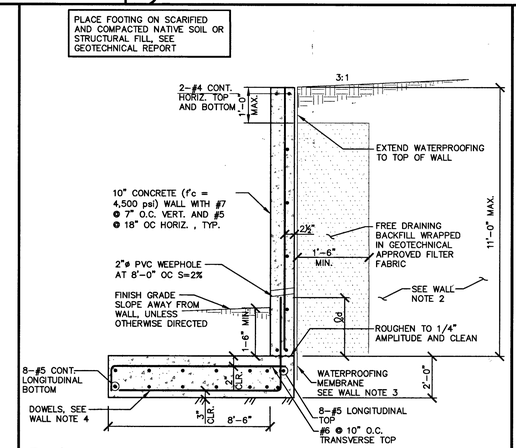

7 RETAINING WALL SECTION ALONG PARKING NOT TO SCALE

NOTE: APPROVAL OF L-18-02468 DOES NOT CONSTITUTE APPROVAL OF STRUCTURAL DESIGN

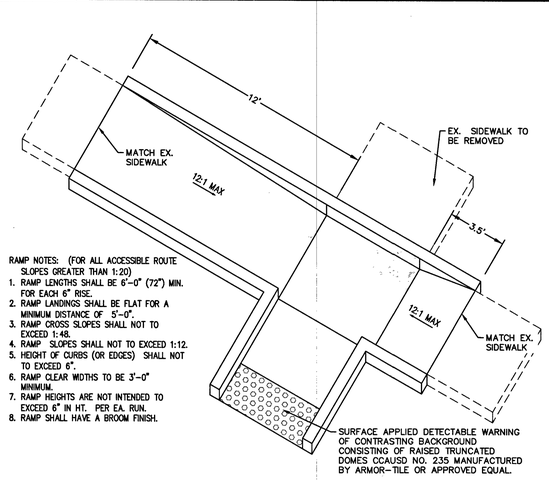

RAMP NOTES: (FOR ALL ACCESSIBLE ROUTE SLOPES GREATER THAN 1:20)
1. RAMP LENGTHS SHALL BE 6'-0" (72") MIN. FOR EACH 6" RISE.
2. RAMP LANDINGS SHALL BE FLAT FOR A MINIMUM DISTANCE OF 5'-0".
3. RAMP CROSS SLOPES SHALL NOT TO EXCEED 1:48.
4. RAMP SLOPES SHALL NOT TO EXCEED 1:12.
5. HEIGHT OF CURBS (OR EDGES) SHALL NOT TO EXCEED 6".
6. RAMP CLEAR WIDTHS TO BE 3'-0" MINIMUM.
7. RAMP HEIGHTS ARE NOT INTENDED TO EXCEED 6" IN HT. PER EA. RUN.
8. RAMP SHALL HAVE A BROOM FINISH.

8 ADA RAMP NOT TO SCALE

REVISIONS:

REV.	DESCRIPTION:	DATE:

SEAL: PROFESSIONAL ENGINEER STATE OF NEVADA GUY M. MORRIS EXP. 12-31-19 CIVIL No. 14526 11/13/18

DATE: 11/13/18
DRAWN BY: NMG
SUBMITTAL: MYLAR
A/E PROJECT NO.: 171058

A/E: Gensler
3883 Howard Hughes Pkwy
Suite 650
Las Vegas NV 89169
Tel: 702.893.2800
Fax: 702.893.2805

CONSULTANT: Lochsa engineering
6345 South Jones Blvd.
Suite 100
Las Vegas, NV 89118
Phone (702) 365-9312
Fax (702) 365-9317
www.lochsa.com

CONSTRUCTION MGMT:	DATE:
PROJECT MANAGER:	
COORDINATOR:	
BUILDING DEPARTMENT:	
CODE COMPLIANCE:	
AHERA REVIEW:	

ASBESTOS WORK IS:
REQUIRED ☐ NOT REQUIRED ☐

MPID: 0013529

CLARK COUNTY SCHOOL DISTRICT
CONSTRUCTION MANAGEMENT DEPARTMENT 1180 MILITARY TRIBUTE PL HENDERSON NV 89074 PHONE: 702-799-8710

PROJECT: JOHN W. BONNER E.S. ADDITION

DRAWING TITLE: DETAIL SHEETS SHEET 3 OF 3

FACILITY: JOHN W. BONNER E.S. - LOCATION 309

SHEET NO: 715-210
C6.03
SHEET 10 OF 15 L18-02468

11/14/2018 10:30 AM
T:\CAD\171058\Drawings\Plot Drawings\C-171058-803-0713.dwg

SOUTHWEST GAS CORPORATION

BONNER ES ADDITION
CITY OF LAS VEGAS
WR #3486151

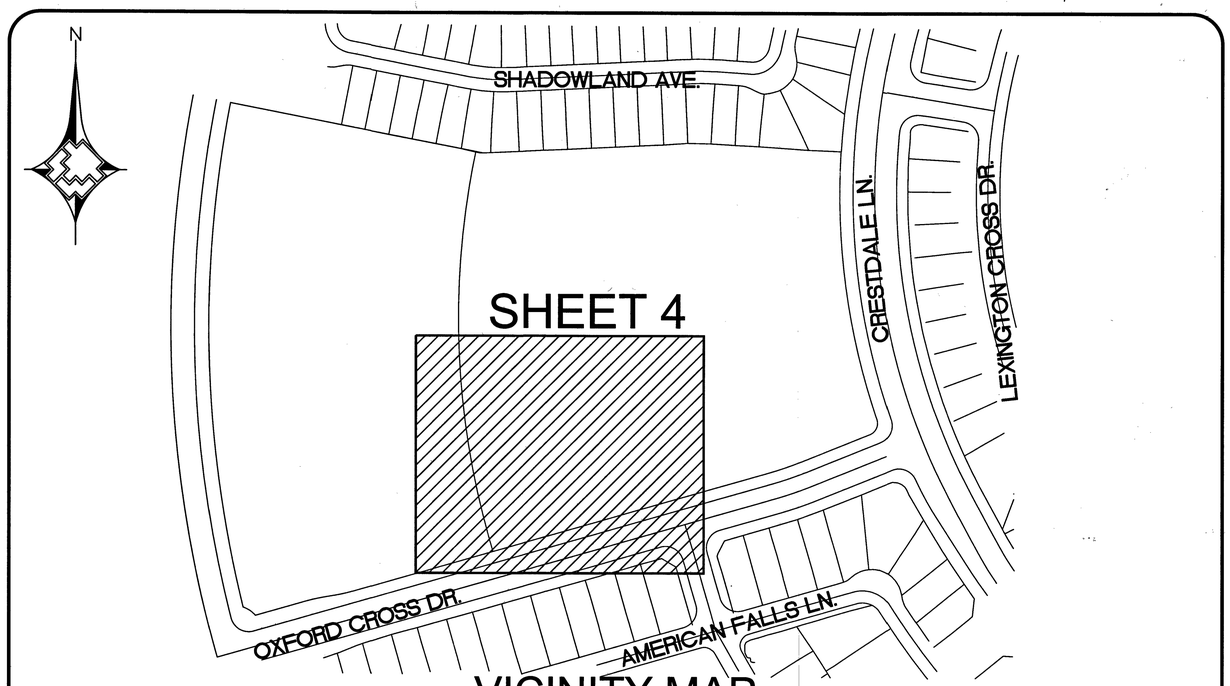

VICINITY MAP

NOT TO SCALE

LEGEND

- EXISTING GAS LINE
- GAS LINE TO BE ABANDONED
- EXISTING GAS SERVICE
- PROPOSED MAIN GAS LINE (NEW)
- PROPOSED SERVICE LATERAL (NEW)
- PROPOSED SERVICE LINE (NEW)
- RIGHT OF WAY LINE
- STREET CENTERLINE
- PROPERTY LINE
- BACK OF CURB
- MATCHLINE
- PAVEMENT CUT AND REPAIR
- EXISTING ANODELESS RISER
- EXISTING ANODE RISER
- EXISTING GAS LIGHT
- EXISTING GAS VALVE
- STL (1) PE (1) PROPOSED MAIN CALL OUT
- [1] ABANDONED FACILITIES CALL OUT
- (12") GAS DIMENSIONS
- EXCESS FLOW VALVE

SHEET INDEX

1. COVER SHEET
2. ABBREVIATIONS & NOTES
3. MATERIALS & SIGNATURES
4. DESIGN PLAN
5. TYPICAL SWPPP BMP DETAILS

811 Know what's **below.** **Call** before you dig.

CUSTOMERS 1

NO.	DESCRIPTION	BY	DATE	APPVD.
1.				
2.				
3.				
4.				

REVISIONS

SOUTHWEST GAS CORPORATION

TAX CODES	UNIT NO.	UNIT TYPE	INSTL. (PROPOSED)	RETIRED (PROPOSED)	INSTL. (COMPLETED)	RETIRED (COMPLETED)

PROPERTY UNITS

SEE SHEET 3

AS-BUILT DRAWING-PRESSURE TEST DATA

PIPE DIA. ____
PIPE LENGTH ____
PIPE TYPE ____
MIN. DURATION ____

TEST MEDIUM: ☐ AIR ☐ NITROGEN ☐ WATER ☐ SOAP
TEST METHOD: ☐ GAUGE ☐ CHART
GAUGE/ PRESS REC SN#
START ____ END ____

TEST PRES. (PSIG) ____
TIME ____
DATE ____
PERFORMED BY ____

VISUAL INSPECTION CERTIFICATION

I HAVE VISUALLY INSPECTED ALL HEATED FUSIONS, SOLVENT CEMENT, MECHANICAL JOINTS, AND WELDS THAT I HAVE PERFORMED

NAME ____ DATE ____

AS-BUILTS ACCEPTED BY ____ DATE ____
POSTED BY ____ DATE ____
POSTING QC'D BY ____ DATE ____

CONSTRUCTION

INSPECTOR ____
FOREMAN ____
REVIEWED BY ____

PERMIT INFORMATION

CITY OF LAS VEGAS
02-0200

ISOLATION AREA	W.R. NO.
ISO_21 DIST_299	3486151
LOCATION	**ATLAS #/TILE #**
SEC 25 T20S R59E M.D.M.	x576y520

ENGINEER/TECHNICIAN	DAVID FRIEDLANDER	PHONE	702-365-2203
ACCOUNT REP.	MICHAEL COOPER	PHONE	702-365-2580
PROJECT CONTACT	CHRIS FENTON		702-893-2868
SHEET NO. 1 OF 5	SCALE: N.T.S	DATE	12/01/2017
DWN. BY SEI	CHKD. BY	APPVD. BY	

TITLE

BONNER ES ADDITION
COVER SHEET

715-210
418-02468

SHEET 1 OF 5

DOC_3486151

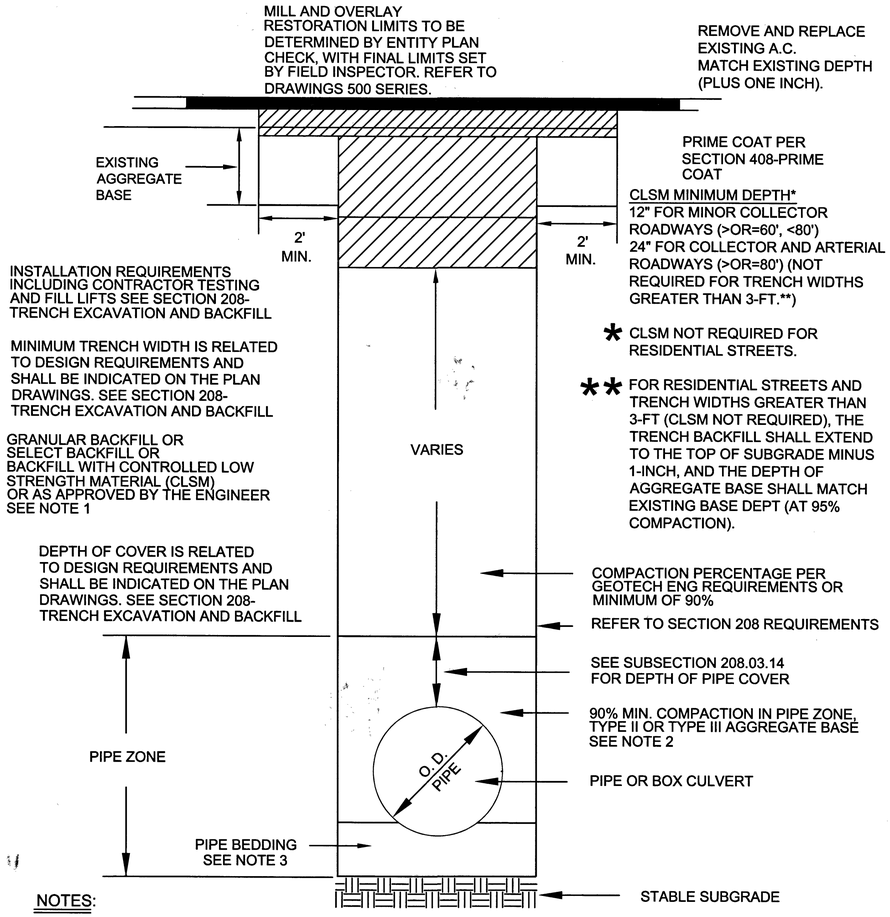

NOTES:

1. NO STONES OR LUMPS GREATER THAN 3" PERMITTED IN TRENCH 2' OR LESS IN WIDTH.
2. TRENCH WIDTH, BEDDING, SUBGRADE AND PIPE ZONE REQUIREMENTS FOR UTILITY INSTALLATIONS SHALL CONFORM TO THE RESPECTIVE ENTITY REQUIREMENTS.
3. CRUSHED ROCK MAY BE USED FOR PIPE BEDDING ONLY IF MATERIAL USE HAS BEEN SPECIFICALLY APPROVED BY THE GOVERNING AGENCY. SEE STANDARD DRAWING NO. 505 FOR PIPE BEDDING METHODS.
4. LAS VEGAS VALLEY WATER DISTRICT REQUIRES PIPE BEDDING AND BACKFILL WITHIN THE PIPE ZONE TO BE OF THE SAME MATERIAL.

RTC STD DWG 503

811 Know what's **below.** **Call** before you dig.

ABBREVIATIONS

AB	ABANDONED
AC	ASPHALTIC CONCRETE
ACP	ASBESTOS CEMENT PIPE
AIM	AREA ISOLATION MODULE
BLVD	BOULEVARD
BM	BENCHMARK
BMI	BLACK MOUNTAIN INDUSTRIAL
BO	BLOW OFF
BTU	BRITISH THERMAL UNIT
BWC	BASIC WATER COMPANY
COBC	CITY OF BOULDER CITY
CC	CLARK COUNTY
CCAUSD	CLARK COUNTY AREA UNIFORM STANDARD DRAWING
CCRFCD	CLARK COUNTY REGIONAL FLOOD CONTROL DISTRICT
CCWRD	CLARK COUNTY WATER RECLAMATION DISTRICT
CIP	CAST IRON PIPE
CL	CENTERLINE
CLV	CITY OF LAS VEGAS
CNLV	CITY OF NORTH LAS VEGAS
COH	CITY OF HENDERSON
CP	CATHODIC PROTECTION
DET	DETAIL
DI	DUCTILE IRON
DIA	DIAMETER
DIMP	DISTRIBUTION INTEGRITY MANAGEMENT PROGRAM
DNR	DOES NOT REGISTER
DWG	DRAWING
EFV	EXCESS FLOW VALVE
EG	EXISTING GROUND
EHDD	EFFECTIVE HEATING DEGREE DAY
ELEC	ELECTRICAL
ELEV	ELEVATION
EMRS	ELECTRONIC MAPPING RECORDS SYSTEM
EPR	ELECTRONIC PRESSURE RECORDERS
ESMT	EASEMENT
EX	EXISTING
FERC	FEDERAL ENERGY REGULATORY COMMISSION
FOS	FACILITY OUT OF SERVICE
FH	FIRE HYDRANT
GIR	GAS INFRASTRUCTRE REPLACEMENT
GPR	GAS PRESSURE REGULATOR
HCA	HIGH CONSEQUENCE AREA
HDD	HEATING DEGREE DAY
HDPE	HIGH DENSITY POLYETHYLENE PIPE
HP	HIGH PRESSURE
HERS	HOME ENERGY RATING SYSTEM
HOP	HISTORIC OPERATING PROCEDURE
HVTT	HIGH VOLUME TAPPING TEE
ID	INSIDE DIAMETER
IN	INCH(ES)
IPS	IRON PIPE SIZE
IS	IDENTIFIED SITE
JT	JOINT TRENCH
KRG	KERN RIVER GAS COMPANY
LDCPE	LARGE DIAMETER COILED POLYETHYLENE PIPE
LVVWD	LAS VEGAS VALLEY WATER DISTRICT
MAOP	MAXIMUM ALLOWABLE OPERATING PRESSURE
MCFH	THOUSAND CUBIC FEET PER HOUR
MH	MANHOLE
MOP	MAXIMUM OPERATING PRESSURE
MSA	METER SET ASSEMBLY
MVP	MAPPING VERIFICATION PROCEDURE
NAP	NOT A PART
NDOT	NEVADA DEPARTMENT OF TRANSPORTATION
NTSB	NATIONAL TRANSPORTATION SAFETY BOARD
NTS	NOT TO SCALE
OC	ON CENTER
OD	OUTSIDE DIAMETER
OH	OVERHEAD
OHP	OVERHEAD POWER
P	POWER
PAOP	POTENTIAL ALLOWABLE OPERATING PRESSURE
PCC	PORTLAND CEMENT CONCRETE
PE	POLYETHYLENE PIPE
PH	POT HOLE
PHMSA	PIPELINE & HAZARDOUS MATERIALS SAFETY ADMINISTRATION
PL	PROPERTY LINE
PIC	POTENTIAL IMPACT CIRCLE
PLS	PRESSURE LIMITING STATION
PP	POWER POLE
PQF	PREQUALIFIED FITTING
PVC	POLYVINYL CHLORIDE
RAM	RISK ASSESSMENT MODEL
RC	REINFORCED CONCRETE
RCP	REINFORCED CONCRETE PIPE
SD	STORM DRAIN
SDMH	STORM DRAIN MANHOLE
SDR	STANDARD DIMENSION RATIO
SF	SQUARE FOOT
SHT	SHEET
SHP	STEEL HIGH PRESSURE PIPE
SMYS	SPECIFIED MAXIMUM YIELD STRENGTH
SNWA	SOUTHERN NEVADA WATER AUTHORITY
SS	SANITARY SEWER
SST	STAINLESS STEEL
ST	STREET
STA	STATION
STD	STRENGTH TEST DRAWING
STL	STEEL
SWG	SOUTHWEST GAS
TEL	TELEPHONE
TB	THRUST BLOCK
TOP	TOP OF PIPE
TP	TEST POINT
TRIMP	TRANSMISSION INTEGRITY MANAGEMENT PROGRAM
UDACS	UNIFORM DESIGN AND CONSTRUCTION STANDARDS
UOC	UNUSUAL OPERATING CONDITIONS
UOP	UNIT OF PROPERTY
UPRR	UNION PACIFIC RAILROAD
USD	UNIFORM STANDARD DRAWING
VCP	VITRIFIED CLAY PIPE
VERT	VERTICAL
VG	VALLEY GUTTER
VSP	VINTAGE STEEL PIPE
W	WATER
WMS	WORK MANAGEMENT SYSTEM
WR	WORK REQUEST
WT	WALL THICKNESS
WV	WATER VALVE
YD	YARD(S)

CONSTRUCTION NOTES

1. SUGGESTED GAS LOCATIONS ARE TO CLEAR SUBSTRUCTURES LOCATED IN FIELD.
2. ALL PIPELINE CONSTRUCTION SHALL CONFORM TO APPLICABLE JURISDICTION SPECIFICATIONS.
3. DO NOT SCALE THIS DRAWING.
4. SEE AC'S FOR SERVICE REPLACEMENT.
5. CHANGE IN PROPOSED MAIN LOCATION MUST BE AUTHORIZED BY SWG ENGINEER PRIOR TO INSTALLATION.
6. GAS MAINS SHALL BE PURGED PER OPERATIONS MANUAL.
7. ABANDONED SERVICE NO ACTION REQUIRED.
8. REPLACE ALL ACTIVE SERVICES INCLUDING AA, PVC, M7000 PE, M8000 PE, EXCEPT WHERE EXISTING M8100 PE SERVICES ARE VERIFIED, INSPECTED, AND APPROVED FOR TIE-OVER BY SWG INSPECTOR.
9. EXISTING SERVICES, VERIFICATION, AND INSPECTION REQUIRED FROM MAIN TO RISER. TIE INTO NEW MAIN IF APPROVED BY SWG INSPECTOR. REPLACE ALL AA, PVC, M7000 PE, AND M8000 PE SERVICES. M8100 PE SERVICES TO BE VERIFIED, INSPECTED AND APPROVED BY SWG INSPECTOR.
10. EXISTING SERVICE, UNKNOWN TYPE, SIZE, AND LOCATION TO BE VERIFIED.
11. REPLACEMENT SERVICES TO BE SINGLE OR BRANCHED. NO CROSS-LOT REPLACEMENT SERVICES PERMITTED.
12. REPLACE ALL ANODE RISERS WITH ANODELESS RISERS.
13. ALL EXISTING UTILITY LOCATION TO BE VERIFIED PRIOR TO START OF CONSTRUCTION.
14. CONTACT ENGINEERING FOR BYPASS INFORMATION.
15. ALL MAIN TIE-INS REQUIRING TEES ARE TO BE FULL-FLOW TEES UNLESS OTHERWISE STATED.
16. ALL SHORING REQUIREMENTS SHALL CONFORM TO APPLICABLE PORTIONS OF THE OPERATIONS MANUAL.
17. REQUEST FOR SURVEYING AND/OR STAKING WILL BE SUBMITTED TO ENGINEERING 72 HOURS IN ADVANCE, MINIMUM.
18. TRENCHING AND PAVEMENT REPLACEMENT SHALL CONFORM WITH RTC STANDARD 503 AND 500.4. AND UNIFORM STANDARD SPEC SECTION 208.

RTC NOTES:

PAVEMENT REPAIR SHALL CONFORM TO RTC:

A1 500.4

A2 503

NO.	DESCRIPTION	BY	DATE	APPVD.
1.				
2.				
3.				
4.				

REVISIONS

SOUTHWEST GAS CORPORATION

TAX CODES	UNIT NO.	UNIT TYPE	INSTL.	RETIRED	INSTL.	RETIRED
			PROPOSED		COMPLETED	

PROPERTY UNITS

AS-BUILT DRAWING-PRESSURE TEST DATA

SEE SHEET 3

PIPE DIA. ____ TEST MEDIUM: ☐ AIR ☐ NITROGEN ☐ WATER ☐ SOAP — TEST METHOD: ☐ GAUGE ☐ CHART
PIPE LENGTH ____
PIPE TYPE ____ GAUGE/ PRESS REC SN# ____
MIN. DURATION ____ START ____ END ____
TEST PRES. (PSIG) ____ ____
TIME ____ ____
DATE ____ ____
PERFORMED BY ____ ____

VISUAL INSPECTION CERTIFICATION

I HAVE VISUALLY INSPECTED ALL HEATED FUSIONS, SOLVENT CEMENT, MECHANICAL JOINTS, AND WELDS THAT I HAVE PERFORMED

SEE SHEET 3

NAME ____ DATE ____

AS-BUILTS ACCEPTED BY ____ DATE ____
POSTED BY ____ DATE ____
POSTING QC'D BY ____ DATE ____

CONSTRUCTION

SEE SHEET 3

INSPECTOR ____
FOREMAN ____
REVIEWED BY ____

PERMIT INFORMATION

CITY OF LAS VEGAS
02-0200

ISOLATION AREA	W.R. NO.
ISO_21 DIST_299	3486151
LOCATION	ATLAS #/TILE #
SEC 25 T20S R59E M.D.M.	x576y520

ENGINEER/TECHNICIAN	DAVID FRIEDLANDER	PHONE	702-365-2203
ACCOUNT REP.	MICHAEL COOPER	PHONE	702-365-2580
PROJECT CONTACT	CHRIS FENTON		702-893-2868
SHEET NO. 2 OF 5	SCALE: N.T.S	DATE	12/01/2017
DWN. BY SEI	CHKD. BY	APPVD. BY	

TITLE

BONNER ES ADDITION
ABBREVIATIONS & NOTES

715-210
L18-02468

SHEET 2 OF 5

DOC_3486151

MATERIAL LIST FOR PROPOSED DISTRIBUTION FACILITIES

ITEM#	QTY. (DESIGN)	QTY. (AS-BUILT)	STOCK ID#	DESCRIPTION
1	355'		100-5101	PROPOSED 2" PE SERVICE
2	1		160-8174	PROPOSED 4"X2" PE TAPPING TEE
3	1		161-7661	PROPOSED 2" PE RISER
4	1		140-3067	PROPOSED 2" PE ELBOW 90°
5	1		160-8403	PROPOSED 2" PE EFV COUPLING (5500)

VISUAL INSPECTION (OQ/PJQ)

SIGNATURE _____

DATE _____

SYSTEM D_W_VALLEY

DR. NO. 21DR10002567

SEGMENT M.A.O.P. N/A

SYSTEM M.A.O.P. 60_PSIG

SYSTEM M.O.P. 55_PSIG

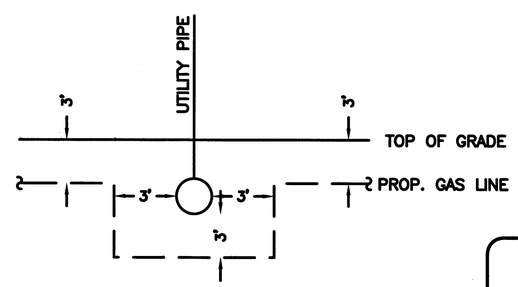

TYPICAL UTILITY CROSSING DETAIL
NOT TO SCALE

PURGE PLAN WAS COMPLETED IN ACCORDANCE WITH THE OPERATIONS MANUAL GUIDELINES BY:

PRINT: _____ DATE: _____

SIGNATURE: _____

Know what's **below.** **Call** before you dig.

NO.	DESCRIPTION	BY	DATE	APPVD.
1.				
2.				
3.				
4.				

REVISIONS

SOUTHWEST GAS CORPORATION

TAX CODES	UNIT NO.	UNIT TYPE	INSTL. (PROPOSED)	RETIRED (PROPOSED)	INSTL. (COMPLETED)	RETIRED (COMPLETED)
	3800102	2" PE	355'			

PROPERTY UNITS

AS-BUILT DRAWING-PRESSURE TEST DATA

PIPE DIA. _____
PIPE LENGTH _____
PIPE TYPE _____
MIN. DURATION _____

TEST MEDIUM: ☐ AIR ☐ NITROGEN ☐ WATER ☐ SOAP
TEST METHOD: ☐ GAUGE ☐ CHART
GAUGE/ PRESS REC SN#

	START	END
TEST PRES. (PSIG)		
TIME		
DATE		
PERFORMED BY		

VISUAL INSPECTION CERTIFICATION

I HAVE VISUALLY INSPECTED ALL HEATED FUSIONS, SOLVENT CEMENT, MECHANICAL JOINTS, AND WELDS THAT I HAVE PERFORMED

NAME _____ DATE _____

AS-BUILTS ACCEPTED BY _____ DATE _____
POSTED BY _____ DATE _____
POSTING QC'D BY _____ DATE _____

CONSTRUCTION

INSPECTOR _____
FOREMAN _____
REVIEWED BY _____

PERMIT INFORMATION

CITY OF LAS VEGAS
02–0200

ISOLATION AREA	W.R. NO.
ISO_21 DIST_299	3486151
LOCATION	**ATLAS #/TILE #**
SEC 25 T20S R59E M.D.M.	x576y520

ENGINEER/TECHNICIAN	DAVID FRIEDLANDER	PHONE	702-365-2203
ACCOUNT REP.	MICHAEL COOPER	PHONE	702-365-2580
PROJECT CONTACT	CHRIS FENTON		702-893-2868
SHEET NO. 3 OF 5	SCALE: N.T.S	DATE	12/01/2017
DWN. BY SEI	CHKD. BY	APPVD. BY	

TITLE

BONNER ES ADDITION
MATERIALS & SIGNATURES

715-210
L18-02468

SHEET 3 OF 5

DOC_3486151

N

0 40
1" = 40'

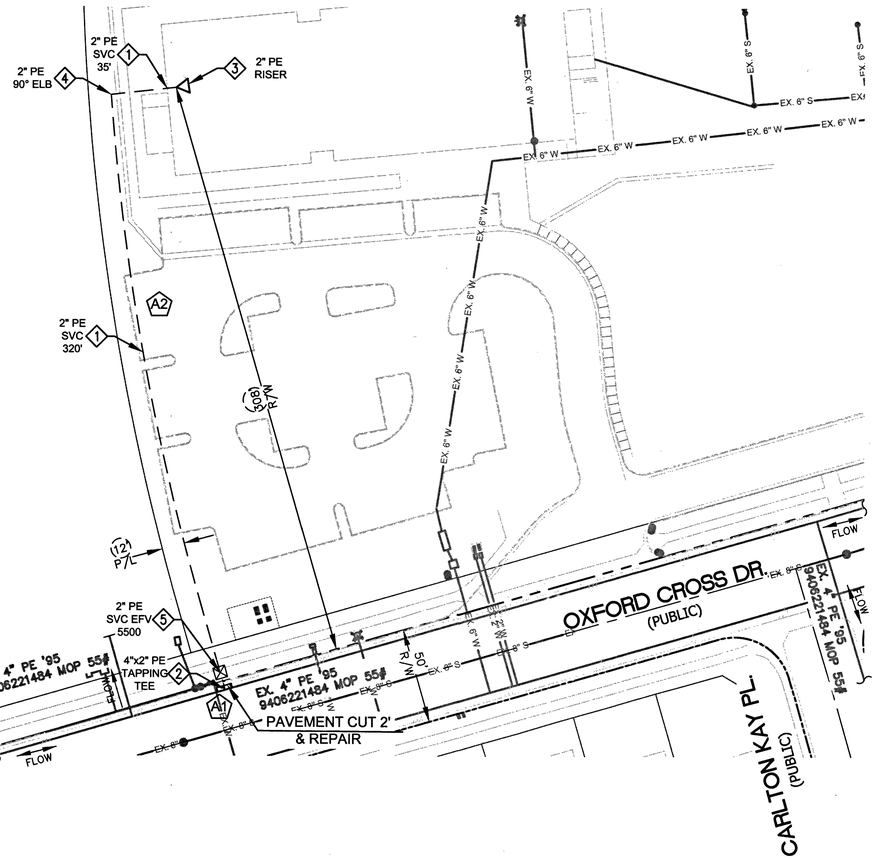

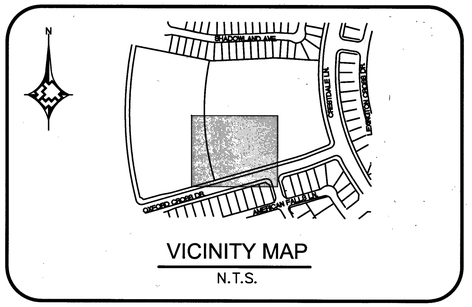

VICINITY MAP
N.T.S.

MATERIAL LIST FOR PROPOSED DISTRIBUTION FACILITIES

ITEM#	STOCK ID#	DESCRIPTION
1	100-5101	PROPOSED 2" PE SERVICE
2	160-8174	PROPOSED 4"X2" PE TAPPING TEE
3	161-7661	PROPOSED 2" PE RISER
4	140-3067	PROPOSED 2" PE ELBOW 90°
5	160-8403	PROPOSED 2" PE EFV COUPLING (5500)

Know what's **below.**
Call before you dig.

RTC NOTES:

PAVEMENT REPAIR SHALL CONFORM TO RTC:

A1 500.4

A2 503

NO.	DESCRIPTION	BY	DATE	APPVD.
1.				
2.				
3.				
4.				

REVISIONS

SOUTHWEST GAS CORPORATION

TAX CODES	UNIT NO.	UNIT TYPE	INSTL.	RETIRED	INSTL.	RETIRED
			PROPOSED		COMPLETED	

PROPERTY UNITS

SEE SHEET 3

AS-BUILT DRAWING-PRESSURE TEST DATA

PIPE DIA. ____
PIPE LENGTH ____
PIPE TYPE ____
MIN. DURATION ____
TEST PRES. (PSIG) ____
TIME ____
DATE ____
PERFORMED BY ____

TEST MEDIUM: ☐ AIR ☐ NITROGEN ☐ WATER ☐ SOAP
TEST METHOD: ☐ GAUGE ☐ CHART
GAUGE/ PRESS REC SN#
START ____ END ____

VISUAL INSPECTION CERTIFICATION

I HAVE VISUALLY INSPECTED ALL HEATED FUSIONS, SOLVENT CEMENT, MECHANICAL JOINTS, AND WELDS THAT I HAVE PERFORMED

NAME ____ DATE ____

AS-BUILTS ACCEPTED BY ____ DATE ____
POSTED BY ____ DATE ____
POSTING QC'D BY ____ DATE ____

CONSTRUCTION

INSPECTOR ____
FOREMAN ____
REVIEWED BY ____

PERMIT INFORMATION

CITY OF LAS VEGAS
02-0200

ISOLATION AREA	W.R. NO.
ISO_21 DIST_299	3486151
LOCATION	ATLAS #/TILE #
SEC 25 T20S R59E M.D.M.	x576y520

ENGINEER/TECHNICIAN	DAVID FRIEDLANDER	PHONE	702-365-2203
ACCOUNT REP.	MICHAEL COOPER	PHONE	702-365-2580
PROJECT CONTACT	CHRIS FENTON		702-893-2868
SHEET NO. 4 OF 5	SCALE: 1"=40'	DATE	12/01/2017
DWN. BY SEI	CHKD. BY	APPVD. BY	

TITLE

BONNER ES ADDITION
DESIGN PLAN

715-210
L18-02468

SHEET 4 OF 5

DOC_3486151

TYPICAL SWPPP BMP DETAILS

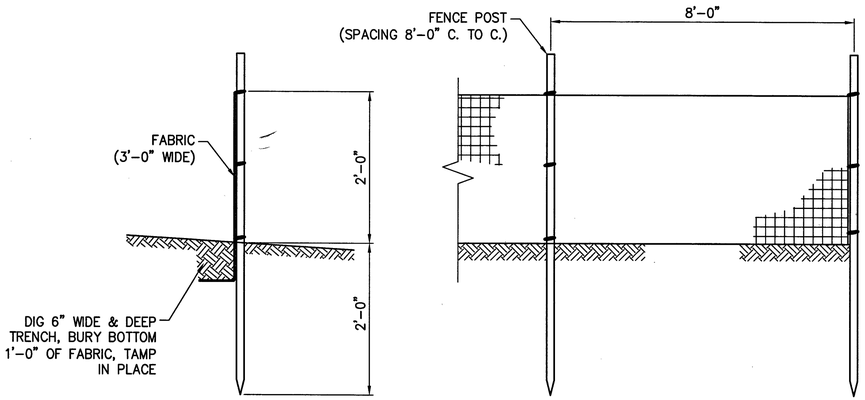

1 - **SILT FENCE**
N.T.S.

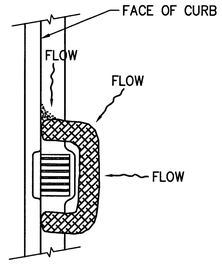

2 - **FIBER ROLL**
N.T.S.

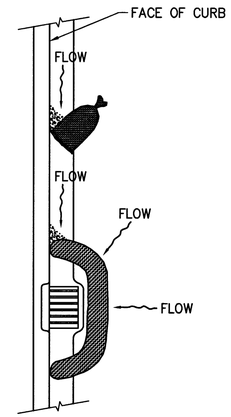

3 - **SAND BAG/ ROLL**
N.T.S.

SWPPP NOTES

1. SOUTHWEST GAS CORPORATION. IT'S CONTRACTOR, AND/OR THEIR AUTHORIZED AGENTS SHALL INSTALL ONE OF THE APPROPRIATE BMP'S FOR THE PROTECTION OF EXISTING STORM DRAIN INLETS, WITHIN OR SIGNIFICANTLY NEAR ANY IMPROVED RIGHT-OF-WAY, FROM DEBRIS AND SEDIMENT RESULTING FROM CONSTRUCTION OF NATURAL GAS FACILITIES.
2. SOUTHWEST GAS CORPORATION, ITS CONTRACTOR, AND/OR THEIR AUTHORIZED AGENTS SHALL EACH DAY REMOVE ALL SEDIMENT, MUD CONSTRUCTION DEBRIS, OR OTHER POTENTIAL POLLUTANTS THAT MAY HAVE BEEN DISCHARGED TO, OR ACCUMULATED IN, THE PUBLIC RIGHTS OF WAY OF CLARK COUNTY AS A RESULT OF CONSTRUCTION ACTIVITIES ASSOCIATED WITH THIS SITE DEVELOPMENT OR CONSTRUCTION PROJECT. SUCH MATERIALS SHALL BE PREVENTED FROM ENTERING THE STORM SEWER SYSTEM, USING BEST MANAGEMENT PRACTICES DETAIL ON THIS SHEET.
3. ADDITIONAL CONSTRUCTION SITE DISCHARGE BEST MANAGEMENT PRACTICES MAY BE REQUIRED OF SOUTHWEST GAS CORPORATION, IT'S CONTRACTOR, AND/OR THEIR AUTHORIZED AGENTS DUE TO UNFORESEEN EROSION PROBLEMS OR IF THE LISTED BMP'S ON THIS SHEET DO NOT MEET THE PERFORMANCE STANDARDS SPECIFIED IN THE CLARK COUNTY CODE - CHAPTER 24.0/STORM SEWER SYSTEM DISCHARGE AND THE LAS VEGAS VALLEY CONSTRUCTION SITE BMP GUIDANCE MANUAL.
4. ACCUMULATED SEDIMENT IN BMP'S SHALL BE REMOVED WITH SEVEN DAYS AFTER A STORM WATER RUNOFF EVENT OR PRIOR TO THE NEXT ANTICIPATED STORM EVENT, WHICHEVER IS EARLIER. SEDIMENT MUST BE REMOVED WHEN BMP DESIGN CAPACITY HAS BEEN REDUCED BY 50 PERCENT OR MORE.

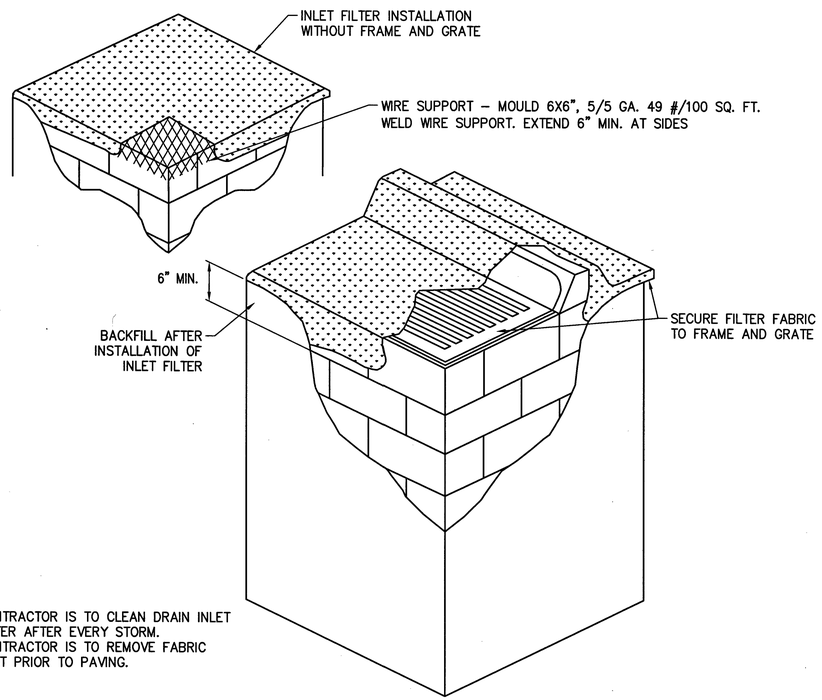

NOTE:
1. CONTRACTOR IS TO CLEAN DRAIN INLET FILTER AFTER EVERY STORM.
2. CONTRACTOR IS TO REMOVE FABRIC JUST PRIOR TO PAVING.

4 - **DRAIN INLET FILTER**
N.T.S.

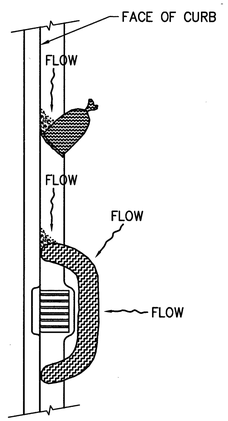

5 - **GRAVEL BAG/ ROLL**
N.T.S.

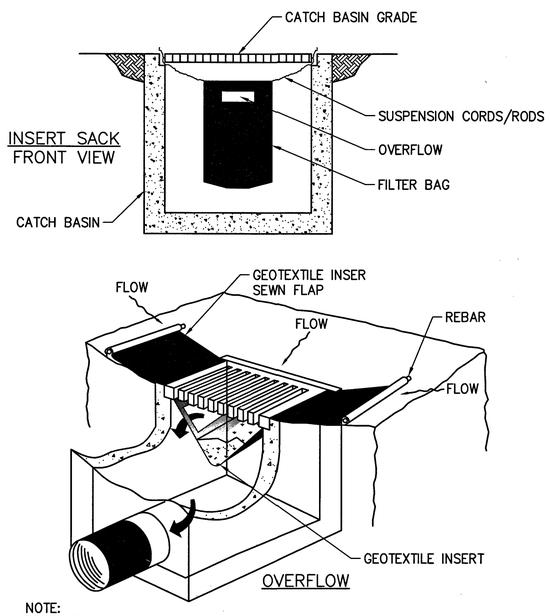

NOTE:
RECESSED CURB INLET MUST BE BLOCKED WHEN USING FILTER FABRIC INLET SACKS. SIZE OF FILTER FABRIC INLET SACK TO BE DETERMINED BY MANUFACTURER.

6 - **SEDIMENT FILTER BAG**
N.T.S.

Know what's **below.** **Call** before you dig.

NO.	DESCRIPTION	BY	DATE	APPVD.
1.				
2.				
3.				
4.				

REVISIONS

SOUTHWEST GAS CORPORATION

TAX CODES	UNIT NO.	UNIT TYPE	INSTL.	RETIRED	INSTL.	RETIRED
			PROPOSED		COMPLETED	

PROPERTY UNITS

SEE SHEET 3

AS-BUILT DRAWING-PRESSURE TEST DATA

PIPE DIA. ____ TEST MEDIUM: ☐ AIR ☐ NITROGEN ☐ WATER ☐ SOAP — TEST METHOD: ☐ GAUGE ☐ CHART
PIPE LENGTH ____
PIPE TYPE ____
MIN. DURATION ____ GAUGE/ PRESS REC SN#
START ____ END ____
TEST PRES. (PSIG) ____ ____
TIME ____ ____
DATE ____ ____
PERFORMED BY ____

VISUAL INSPECTION CERTIFICATION

I HAVE VISUALLY INSPECTED ALL HEATED FUSIONS, SOLVENT CEMENT, MECHANICAL JOINTS, AND WELDS THAT I HAVE PERFORMED

NAME ____ DATE ____

AS-BUILTS ACCEPTED BY ____ DATE ____
POSTED BY ____ DATE ____
POSTING QC'D BY ____ DATE ____

CONSTRUCTION

INSPECTOR ____
FOREMAN ____
REVIEWED BY ____

PERMIT INFORMATION

CITY OF LAS VEGAS
02–0200

ISOLATION AREA	W.R. NO.
ISO_21 DIST_299	3486151
LOCATION	**ATLAS #/TILE #**
SEC 25 T20S R59E M.D.M.	x576y520

ENGINEER/TECHNICIAN	DAVID FRIEDLANDER	PHONE	702-365-2203
ACCOUNT REP.	MICHAEL COOPER	PHONE	702-365-2580
PROJECT CONTACT	CHRIS FENTON		702-893-2868
SHEET NO. 5 OF 5	SCALE: N.T.S	DATE	12/01/2017
DWN. BY SEI	CHKD. BY	APPVD. BY	

TITLE

715-210
L18-02468

BONNER ES ADDITION
TYPICAL SWPPP BMP DETAILS

SHEET 5 OF 5

DOC_3486151