Plotted By: Plenert, Griffin Sheet Set: Kha Layout: C0.2 January 31, 2019 09:47:56am K:\LAV_Civil\092954000-Kite Centennial Center\CAD\Plansheets\Panera – Landlord\092954000-GN.dwg
This document, together with the concepts and designs presented herein, as an instrument of service, is intended only for the specific purpose and client for which it was prepared. Reuse of and improper reliance on this document without written authorization and adaptation by Kimley-Horn and Associates, Inc. shall be without liability to Kimley-Horn and Associates, Inc.

CITY OF LAS VEGAS GENERAL NOTES

1. ALL CONSTRUCTION AND MATERIALS SHALL BE IN ACCORDANCE WITH THE "UNIFORM STANDARD SPECIFICATIONS FOR PUBLIC WORKS CONSTRUCTION OFF-SITE IMPROVEMENTS, CLARK COUNTY AREA NEVADA", LATEST ISSUE; THE "UNIFORM STANDARD DRAWINGS FOR PUBLIC WORKS CONSTRUCTION, CLARK COUNTY AREA NEVADA", LATEST REVISED EDITION; THE "SUMMERLIN IMPROVEMENT STANDARDS" FOR WORK IN THE SUMMERLIN AREA; AND OTHER APPLICABLE APPROVED STANDARDS ISSUED BY THE CONTROLLING AGENCY; THE UNIFORM BUILDING CODE; AND ALL LOCAL CITY CODES AND ORDINANCES APPLICABLE, EXCEPT AS NOTED ON THIS SHEET AS "DEVIATIONS FROM STANDARDS".
2. THE EXISTENCE AND LOCATION OF ANY OVERHEAD OR UNDERGROUND UTILITY LINES, PIPES, OR STRUCTURES SHOWN ON THESE PLANS ARE OBTAINED BY A RESEARCH OF THE AVAILABLE RECORDS. EXISTING UTILITIES AS SHOWN FROM CLV PLANS LIBRARY ARE APPROXIMATE AND FOR RECORD PURPOSES. EXISTING UTILITIES ARE LOCATED ON PLANS ONLY FOR THE CONVENIENCE OF THE CONTRACTOR. EXISTING UTILITY SERVICE LATERALS MAY NOT BE SHOWN ON THE PLANS. THE CONTRACTOR SHALL, AT HIS OWN EXPENSE, LOCATE ALL UNDERGROUND AND OVERHEAD INTERFERENCE'S WHICH MAY AFFECT HIS OPERATION DURING CONSTRUCTION AND SHALL TAKE ALL NECESSARY PRECAUTIONS TO AVOID DAMAGE TO SAME. THE CONTRACTOR SHALL USE EXTREME CAUTION WHEN WORKING NEAR OVERHEAD UTILITIES SO AS TO SAFELY PROTECT ALL PERSONNEL AND EQUIPMENT, AND SHALL BE RESPONSIBLE FOR ALL COST AND LIABILITY IN CONNECTION THEREWITH.
3. THE CONTRACTOR SHALL TAKE ALL PRECAUTIONARY MEASURES NECESSARY TO PROTECT EXISTING UTILITY LINES, STRUCTURES AND STREET IMPROVEMENTS WHICH ARE TO REMAIN IN PLACE, FROM DAMAGE, AND ALL SUCH IMPROVEMENTS OR STRUCTURES DAMAGED BY THE CONTRACTOR'S OPERATIONS SHALL BE REPAIRED OR REPLACED SATISFACTORY TO THE CITY ENGINEER AND OWNING UTILITY COMPANY AT THE EXPENSE OF THE CONTRACTOR.
4. ALL CONSTRUCTION SHALL BE AS SHOWN ON THESE PLANS, ANY REVISIONS SHALL HAVE THE PRIOR WRITTEN APPROVAL OF THE CITY ENGINEER.
5. TYPE V CEMENT SHALL BE USED IN ALL OFF-SITE CONCRETE WORK. CONCRETE TO BE 3000 P.S.I. MINIMUM @ 28 DAYS. MIX DESIGNS TO BE APPROVED BY THE CITY, PRIOR TO THE USE ON THE PROJECT.
6. PERMITS ARE REQUIRED FOR ANY WORK IN THE PUBLIC RIGHT-OF-WAY. THE CONTRACTOR SHALL SECURE ALL PERMITS AND INSPECTIONS REQUIRED FOR THIS CONSTRUCTION.
7. EXPANSION JOINTS REQUIRED, MAXIMUM EVERY 300'IN EXTRUDED-TYPE CURB.
8. AC PAVEMENT TO BE ONE-HALF INCH (½") ABOVE LIP OF ALL GUTTERS AFTER COMPACTION, EXCEPT AT SIDEWALK RAMPS AND CROSS GUTTERS.
9. CURB AND GUTTER FOUND TO BE UNACCEPTABLE TO THE CITY OF LAS VEGAS SHALL BE REMOVED AND REPLACED PER STANDARD DRAWING 216.
10. SIDEWALK RAMPS SHALL BE CONSTRUCTED IN EACH QUADRANT OF AN INTERSECTION PER STANDARD DRAWING 235. EXACT LOCATION OF RAMPS MAY BE ADJUSTED IN THE FIELD BY A CITY INSPECTOR.
11. CONTRACTOR SHALL PROVIDE ALL NECESSARY HORIZONTAL AND VERTICAL TRANSITIONS BETWEEN NEW CONSTRUCTION AND EXISTING SURFACES TO PROVIDE FOR PROPER DRAINAGE AND FOR INGRESS AND EGRESS TO NEW CONSTRUCTION. THE EXTENT OF THE TRANSITIONS TO BE AS SHOWN ON PLANS.
12. ALL GRADING WORK SHALL CONFORM TO THE SOILS REPORT AS PREPARED BY PROFFESSIONAL SERVICES INDUSTRIES, INC. (PROJECT #05591450, DATED: JUNE 1, 2015), APPROVED BY THE CITY ENGINEER, AND AS SHOWN ON THESE PLANS.
13. EXACT LOCATION OF ALL SAWCUT LINES MAY BE ADJUSTED OR DETERMINED IN THE FIELD BY A CITY OF LAS VEGAS ENGINEER IF LOCATION ON PLANS IS NOT CLEARLY SHOWN, OR EXISTING PAVEMENT CONDITION REQUIRES RELOCATIONS.
14. THE CONTRACTOR SHALL TAKE ALL PRECAUTIONS NECESSARY TO PROTECT EXISTING PERMANENT SURVEY MONUMENTS. ANY MONUMENTS DISTURBED SHALL BE REPLACED AND ADJUSTED PER AVAILABLE RECORDS IN ACCORDANCE WITH N.R.S. STATUTE NO. 625.380 & CITY OF LAS VEGAS TITLE 18, APPENDIX D.
15. UTILITY COMPANY METER BOXES, MANHOLE LIDS, VALVE COVERS, ETC., SHALL BE LOCATED OUT OF DRIVEWAYS, DRIVEWAY APRONS, FLOWLINES, AND CROSS GUTTERS UNLESS WRITTEN APPROVAL IS GRANTED BY THE UTILITY COMPANY AND THE CITY ENGINEER.

WALL NOTES:

16. ALL WALLS, NEW OR EXISTING, ARE ONLY SHOWN ON CIVIL PLANS FOR THE PURPOSE OF REVIEWING GRADING RELATIONSHIPS; FLOOD CONTROL AND SIGHT DISTANCE AT INTERSECTIONS. NEW WALLS REQUIRE A SEPARATE PERMIT AND INSPECTION BY THE BUILDING DEPARTMENT.
17. ASPHALT MIX DESIGN MUST BE SUBMITTED AND APPROVED BY THE CITY ENGINEER PRIOR TO THE PLACEMENT OF ASPHALT WITHIN CITY RIGHT OF WAY.
18. CONTRACTOR SHALL ADJUST ALL NEW AND EXISTING INLETS, VALVE BOXES, MANHOLE RIMS, AND SEWER CLEAN OUTS, ETC. TO FINISH GRADE AS APPLICABLE WHETHER OR NOT THEY ARE SHOWN ON THE PLANS.
19. MATERIALS, HANDLING AND PLACEMENT OF PORTLAND CEMENT CONCRETE SHALL BE IN ACCORDANCE WITH APPLICABLE SECTIONS OF NDOT OR THE CLARK COUNTY AREA SPECIFICATIONS (AS APPLICABLE) AND THE PLANS AND DETAILS SHOWN HEREON.
20. WHEN INSTALLING UNDERGROUND FACILITIES THAT REQUIRE UNDERGROUND LOCATING DEVICES SUCH AS MARKER BALLS, LOCATING RIBBON, ETC, THE CONTRACTOR SHALL PROVIDE WRITTEN DOCUMENTATION TO OFFSITE INSPECTION AND TESTING CERTIFYING THAT ALL DEVICES HAVE BEEN PLACED AND VERIFIED TO BE IN GOOD WORKING CONDITION PRIOR TO THE CONSTRUCTION OF ANY ROAD BASE.
21. AFTER HAUNCHING AND PRIOR TO BACKFILL OPERATIONS WHICH WOULD COVER SANITARY SEWER AND STORM DRAIN FACILITIES, CONTRACTOR IS REQUIRED TO SCHEDULE CLV OPEN-TRENCH UTILITY SURVEY INSPECTION FOR DETERMINATION OF FINAL LOCATION COORDINATES. FACILITIES TO BE LOCATED BY CLV SHALL INCLUDE AT A MINIMUM THE HORIZONTAL AND VERTICAL (INVERT) LOCATION OF PUBLIC SEWER MANHOLES, STORM DRAIN MANHOLES AND TRANSITION STRUCTURES, STORM DRAIN LATERALS AT THE CONNECTION TO THE STORM DRAIN MAIN AND AT THE CONNECTION TO A DROP INLET, THE CONNECTION OF SEWER SERVICE LATERALS TO THE SEWER MAIN AND WHERE THE SEWER SERVICE LATERALS EXIT THE PUBLIC RIGHT-OF-WAY, SEWER AND STORM DRAIN MAIN ALIGNMENT, INCLUDING DEFLECTION POINTS.

    OR

    SANITARY SEWER AND STORM DRAIN FINAL LOCATION MAP(S) SHALL BE PROVIDED TO THE CITY AND APPROVED PRIOR TO ACCEPTANCE OF FACILITY VIDEO INSPECTION. THE MAP(S) SHALL INCLUDE THE HORIZONTAL AND VERTICAL (INVERT) LOCATION OF PUBLIC SEWER MANHOLES, STORM DRAIN MANHOLES, STORM DRAIN LATERALS AT THE CONNECTION TO THE STORM DRAIN MAIN AND AT THE CONNECTION TO A DROP INLET, AND THE CONNECTION OF SEWER SERVICE LATERALS TO THE SEWER MAIN AND WHERE THE SEWER SERVICE LATERALS EXITS THE PUBLIC RIGHT-OF-WAY. THE LOCATION SHALL BE DESCRIBED BY STATE PLANE COORDINATES WHICH SHALL BE BASED ON THE OFFICIAL HORIZONTAL AND VERTICAL CONTROL NETWORKS OF THE CITY OF LAS VEGAS. FINAL LOCATION MAPS MUST BE SEALED AND CERTIFIED BY A NEVADA PROFESSIONAL LAND SURVEYOR TO HAVE POSITIONAL CERTAINTIES OF +/- 0.09 METERS (+/- 0.3 FEET) HORIZONTALLY AND VERTICALLY. A SEPARATE ELECTRONIC COMMA DELIMITED FILE FOR THE SANITARY SEWER AND STORM DRAIN COORDINATES SHALL ALSO ACCOMPANY THE SANITARY SEWER AND STORM DRAIN FINAL LOCATION MAP(S).
22. CCTV VIDEO INSPECTION IS REQUIRED FOR ALL SEWER AND STORM DRAINS. THE CCTV VIDEO INSPECTIONS NEED TO BE PERFORMED PER THE DESIGN AND CONSTRUCTION STANDARDS FOR WASTEWATER COLLECTION SYSTEMS LATEST ADDITION.
23. A SEPARATE BORING PERMIT IS REQUIRED FOR ALL BORING ACTIVITIES.

REVISED 06/04/18

CITY OF LAS VEGAS GRADING NOTES

1. IN THE EVENT THAT ANY UNFORESEEN CONDITIONS NOT COVERED BY THESE NOTES ARE ENCOUNTERED DURING GRADING OPERATIONS, THE OWNER/ENGINEER SHALL BE IMMEDIATELY NOTIFIED FOR DIRECTION.
2. IT SHALL BE THE RESPONSIBILITY OF THE CONTRACTOR TO PERFORM ALL NECESSARY CUTS AND FILLS WITHIN THE LIMITS OF THIS PROJECT AND THE RELATED OFF-SITE WORK, SO AS TO GENERATE THE DESIRED SUBGRADE, FINISH GRADES AND SLOPES SHOWN.
3. CONTRACTOR SHALL TAKE FULL RESPONSIBILITY FOR ALL EXCAVATION. ADEQUATE SHORING SHALL BE DESIGNED AND PROVIDED BY THE CONTRACTOR TO PREVENT UNDERMINING OF ANY ADJACENT FEATURES OR FACILITIES AND/OR CAVING OF THE EXCAVATION.
4. THE CONTRACTOR IS WARNED THAT AN EARTHWORK BALANCE WAS NOT NECESSARILY THE INTENT OF THIS PROJECT. ANY ADDITIONAL MATERIAL REQUIRED OR LEFTOVER MATERIAL FOLLOWING EARTHWORK OPERATIONS BECOMES THE RESPONSIBILITY OF THE CONTRACTOR.
5. THE GRADING CONTRACTOR IS RESPONSIBLE TO COORDINATE WITH THE OWNER TO PROVIDE FOR THE REQUIREMENTS OF THE PROJECT STORM WATER POLLUTION PREVENTION PLAN (SWPPP) AND ASSOCIATED PERMIT.
6. CONTRACTOR SHALL GRADE TO THE LINES AND ELEVATIONS SHOWN ON THE PLANS WITHIN THE FOLLOWING HORIZONTAL AND VERTICAL TOLERANCES AND DEGREES OF COMPACTION, IN THE AREAS INDICATED:
   HORIZONTAL VERTICAL COMPACTION
   A. PAVEMENT AREA SUBGRADE 0.1'+ +0.0'TO -0.1' SEE SOILS REPORT
   B. ENGINEERED FILL 0.5'+ +0.1'TO -0.1' SEE SOILS REPORT COMPACTION TESTING WILL BE PERFORMED BY THE OWNER OR HIS REPRESENTATIVE.
7. ALL CUT AND FILL SLOPES SHALL BE PROTECTED UNTIL EFFECTIVE EROSION CONTROL HAS BEEN ESTABLISHED.
8. THE USE OF POTABLE WATER WITHOUT A SPECIAL PERMIT FOR BUILDING OR CONSTRUCTION PURPOSES INCLUDING CONSOLIDATION OF BACKFILL OR DUST CONTROL IS PROHIBITED. THE CONTRACTOR SHALL OBTAIN ALL NECESSARY PERMITS FOR CONSTRUCTION WATER.
9. THE CONTRACTOR SHALL MAINTAIN THE STREETS, SIDEWALKS AND ALL OTHER PUBLIC RIGHT-OF-WAY IN A CLEAN, SAFE AND USABLE CONDITION. ALL SPILLS OF SOIL, ROCK OR CONSTRUCTION DEBRIS SHALL BE PROMPTLY REMOVED FROM THE PUBLICLY OWNED PROPERTY DURING CONSTRUCTION AND UPON COMPLETION OF THE PROJECT. ALL ADJACENT PROPERTY, PRIVATE OR PUBLIC SHALL BE MAINTAINED IN A CLEAN, SAFE AND USABLE CONDITION.
10. IN THE EVENT THAT ANY TEMPORARY CONSTRUCTION ITEM IS REQUIRED THAT IS NOT SHOWN ON THESE DRAWINGS, THE OWNER AGREES TO PROVIDE AND INSTALL SUCH ITEM AT HIS OWN EXPENSE AND AT THE DIRECTION OF THE CITY ENGINEER. TEMPORARY CONSTRUCTION INCLUDES DITCHES, BERMS, ROAD SIGNS AND BARRICADES, ETC.

CITY OF LAS VEGAS STREETLIGHT NOTES

REVISED 04/15/10

1. ALL STREET LIGHTING INSTALLATIONS SHALL BE IN ACCORDANCE WITH THE STREET LIGHTING PLANS, THE "UNIFORM STANDARD SPECIFICATIONS FOR PUBLIC WORKS CONSTRUCTION OFF-SITE IMPROVEMENTS, CLARK COUNTY AREA, NEVADA", LATEST REVISION, AND THE "UNIFORM STANDARD DRAWINGS FOR PUBLIC WORKS CONSTRUCTION OFF-SITE IMPROVEMENTS, CLARK COUNTY AREA, NEVADA", LATEST REVISION, AND ANY ADOPTED SPECIAL AREA STANDARDS.
2. NO DEVIATION OF STREET LIGHT, PULL BOX, CONDUITS (ETC.) LOCATIONS SHALL BE PERMITTED WITHOUT WRITTEN APPROVAL OF TRAFFIC ENGINEERING AND THE CITY ENGINEER.
3. ALL EXISTING STREET LIGHTING SHALL REMAIN OPERATIONAL DURING CONSTRUCTION.
4. ALL STREET LIGHTING CONDUITS STUB SHALL HAVE AT LEAST ONE GREEN #8 THW WIRE INSTALLED, AS TRACER WIRE. WHEN "EMPTY" CONDUIT IS COMPLETELY INSTALLED FROM PB TO PB, IT SHALL HAVE MINIMUM OF 2 #4 AND 1 #8 THW WIRE WITH THE ENDS TAPED OR "SAFE OFF" PRIOR TO FINAL INSPECTION.
5. ANY STRUCTURE SUCH AS BLOCK WALLS, CHAIN LINK FENCES, RETAINING WALLS, ETC., SHALL LEAVE A MINIMUM CLEARANCE IN ACCORDANCE WITH THE USD NO. 320A.
6. AS-BUILT DRAWINGS SHALL BE SUPPLIED TO THE TEFO PRIOR TO ANY PRE-FINAL INSPECTION. THE AS-BUILT DRAWING NEEDS TO BE STAMPED AS-BUILT AND SIGNED BY THE PREPARER.
7. SERVICE POINT SHALL BE COORDINATED WITH NV ENERGY COMPANY, AND WHEREVER POSSIBLE, BE LOCATED NEAR THE CENTER OF THE CIRCUIT. SERVICE POINTS SHALL BE SHOWN ON THE CIVIL PLANS.
8. IT SHALL BE ASSUMED THAT IN THE ABSENCE OF AN EXISTING, WORKABLE CIRCUIT TO ATTACH TO, ALL INSTALLATIONS SHALL REQUIRE A NEW SERVICE FOR OPERATION OF THE CIRCUIT.
9. WHEREVER THERE IS AN OVERHEAD UTILITY THAT MAY CONFLICT WITH THE INSTALLATION OF STREET LIGHTING CIRCUITS AND/OR POLES, THESE CONFLICTS MUST BE RESOLVED BETWEEN THE DEVELOPER AND THE UTILITIES INVOLVED, AT NO EXPENSE TO THE CITY OF LAS VEGAS, BEFORE STREETLIGHT BASES ARE INSTALLED.
10. THE CONTRACTOR SHALL FURNISH COMPLETE SERVICE TO TRANSFORMERS AND CONTROL SYSTEMS IF REQUIRED ON PLANS.
11. THE DEVELOPER/OWNER WILL BE REQUIRED TO SUPPLY POWER TO ALL NEW PUBLIC STREET LIGHTS INSTALLED UNDER THIS DESIGN PRIOR TO BOND RELEASE OR PROJECT COMPLETION. THE DEVELOPER/OWNER WILL BE RESPONSIBLE FOR ALL ITEMS ASSOCIATED WITH THE INSTALLATION, CONSTRUCTION, ENERGIZING, MAINTENANCE AND OPERATIONAL COST OF SAID STREET LIGHTS PRIOR TO PROJECT COMPLETION. REFER TO THE PLAN FOR ANY NEW SERVICE REQUIREMENTS. THE TRANSFER OF OWNERSHIP FROM THE DEVELOPER/OWNER TO THE CITY OF LAS VEGAS FOR ALL NEW PUBLIC STREET LIGHT/S AND/OR SERVICE/S INSTALLED UNDER THIS PLAN DESIGN WILL BE IN CONJUNCTION WITH THIS PROJECT COMPLETION. COORDINATE ALL MAINTENANCE AND OPERATIONAL TRANSFERS WITH THE CITY OF LAS VEGAS TRAFFIC ENGINEERING DEPARTMENT (TEFO) AT (702) 229-6331.

REVISED 04/15/10

CITY OF LAS VEGAS TRAFFIC NOTES

1. ALL CONSTRUCTION SIGNING, BARRICADING, AND TRAFFIC DELINEATION SHALL CONFORM TO THE "MANUAL ON UNIFORM TRAFFIC CONTROL DEVICES", LATEST EDITION.
2. THE STREET SIGN CONTRACTOR SHALL OBTAIN STREET NAMES AND BLOCK NUMBERING FROM THE PLANNING DEPARTMENT PRIOR TO CONSTRUCTION.
3. BEFORE ANY WORK IS STARTED IN THE RIGHT-OF-WAY, THE CONTRACTOR SHALL INSTALL ALL ADVANCE WARNING SIGNS FOR THE CONSTRUCTION ZONE. THE CONTRACTOR SHALL INSTALL TEMPORARY STOP SIGNS AT ALL NEW STREET ENCROACHMENTS INTO EXISTING CITY STREETS WHERE WARRANTED IMMEDIATELY AFTER FIRST GRADING WORK IS ACCOMPLISHED, AND SHALL MAINTAIN SAID SIGNS UNTIL PERMANENT SIGNS ARE INSTALLED.
4. WHEN A DESIGNATED "SAFE ROUTE TO SCHOOL" IS ENCROACHED UPON BY A CONSTRUCTION WORK ZONE AND PUBLIC WORKS STAFF IDENTIFIES A NEED FOR STUDENTS TO BE ASSISTED IN THE SAFE CROSSING THROUGH THAT WORK ZONE, THE CONTRACTOR SHALL BE REQUIRED TO PROVIDE A QUALIFIED "CROSSING GUARD". THE GUARD SHALL BE PRESENT FOR THE FULL DURATION OF TIME THAT CHILDREN ARE LIKELY TO BE PRESENT.
5. IF THE IMPROVEMENTS NECESSITATE THE OBLITERATION, TEMPORARY OBSTRUCTION, TEMPORARY REMOVAL OR RELOCATION OF ANY EXISTING TRAFFIC PAVEMENT MARKING, SUCH PAVEMENT MARKING SHALL BE RESTORED OR REPLACED WITH LIKE MATERIALS TO THE SATISFACTION OF THE CITY TRAFFIC ENGINEER.
6. THE CONTRACTOR SHALL BE RESPONSIBLE FOR PROVIDING AND INSTALLING ALL PERMANENT SIGNS SHOWN ON THE PLANS. ALL NEW TRAFFIC SIGNS SHALL BE FABRICATED WITH DIAMOND GRADE VIP CLASS 6 REFLECTIVE SHEETING OR APPROVED EQUAL. ALL NEW TRAFFIC SIGNS, EXCEPT STREETNAME AND SCHOOL SPEED LIMIT SIGNS, SHALL HAVE 3M SERIES 1160 OR APPROVED EQUIVALENT ANTI-GRAFFITI PROTECTIVE OVERLAY FILM; SCHOOL ZONE SIGNS SHALL HAVE 3M SERIES 1150 ANTI-GRAFFITI PROTECTIVE OVERLAY FILM. STREET NAME SIGNS SHALL CONFORM IN THEIR ENTIRETY TO CURRENT CITY STANDARDS. ALL OTHER SIGNS SHALL BE STANDARD SIZE UNLESS OTHERWISE SPECIFIED ON THE PLANS. ALL SIGN POSTS SHALL BE INSTALLED IN ACCORDANCE WITH THE CURRENT CITY STANDARDS.
7. WHEN A PROPOSED STREET LIGHT STANDARD IS LOCATED WITHIN FIVE (5') FEET OF ANY PROPOSED SIGN SHOWN ON THE PLANS TO BE MOUNTED ON A SIGNPOST, THE SIGN SHALL BE MOUNTED ON THE STREET LIGHT STANDARD AND THE SIGNPOST SHALL BE ELIMINATED.
8. ALL PERMANENT TRAFFIC CONTROL DEVICES CALLED FOR HEREON SHALL BE IN PLACE AND IN FINAL POSITION PRIOR TO ALLOWING ANY PUBLIC TRAFFIC ONTO THE PORTIONS OF THE ROAD(S) BEING IMPROVED HERE UNDER, REGARDLESS OF THE STATUS OF COMPLETION OF PAVING OR OTHER OFF-SITE IMPROVEMENTS CALLED FOR BY THESE PLANS.
9. STREET SIGNS AND STOPS SIGNS SHALL BE INSTALLED PER CITY STANDARD SPECIFICATIONS FOR PLACEMENT OF STREET NAME SIGNS.
10. THE CONTRACTOR SHALL PROVIDE ALL NECESSARY TRAFFIC CONTROL DEVICES AND FLAGGERS TO INSURE THE SAFETY OF THE PUBLIC IN OR AROUND THE WORK AREA. THE CONTRACTOR SHALL HAVE A CERTIFIED ATSSA TRAFFIC CONTROL TECHNICIAN OR IMSA WORK ZONE SAFETY SPECIALIST SET UP, MAINTAIN AND/OR REMOVE ALL TRAFFIC CONTROL DEVICES IN THE CITY OF LAS VEGAS RIGHT OF WAY.
11. WORK IN PUBLIC STREETS, ONCE BEGUN, SHALL BE EXPEDITED TO COMPLETION SO AS TO PROVIDE MINIMUM INCONVENIENCE TO ADJACENT PROPERTY OWNERS AND TO THE TRAVELING PUBLIC.
12. THE CONTRACTOR SHALL BE RESPONSIBLE FOR NOTIFYING CITIZENS AREA TRANSIT (C.A.T.) IF THE CONSTRUCTION INTERRUPTS OR RELOCATES A BUS STOP OR HAS AN ADVERSE EFFECT ON BUS SERVICE ON THAT STREET TO ARRANGE FOR TEMPORARY RELOCATION OF STOP.
13. GUARDS SHALL BE OBTAINED BY CONTACTING THE METROPOLITAN POLICE DEPARTMENT SPECIAL EVENTS UNIT (PHONE # 828-3442) WHO WILL PROVIDE OFFICERS PROPERLY TRAINED IN TRAFFIC CONTROL. FEES FOR THE USE OF THESE OFFICERS SHALL BE SET BY METRO AND WILL BE PAID BY THE CONTRACTOR. THE CONTRACTOR IS RESPONSIBLE FOR ALL ARRANGEMENTS WITH METRO.
14. ANY WORK WITHIN 300' OF A SIGNALIZED INTERSECTION WILL BE NIGHT WORK, UNLESS OTHERWISE DIRECTED BY THE CITY OF LAS VEGAS TRAFFIC ENGINEER.
15. THE CONTRACTOR SHALL CONTACT THE TRAFFIC ENGINEERING DIVISION (TRANSPORTATION SECTION) THROUGH THE PROJECT'S OFFSITE INSPECTOR PRIOR TO INITIATING PAVING TO RECEIVE DIRECTION FOR ANY PERMANENT OR TEMPORARY MODIFICATIONS TO THE APPROVED DRAWINGS REGARDING FINAL PAVEMENT TRANSITIONS, MARKINGS AND SIGNING THAT ARE REQUIRED TO MATCH ADJACENT ROADWAY SEGMENTS. THE CONTRACTOR SHALL PROVIDE A DRAWING FOR APPROVAL BY THE TRAFFIC ENGINEERING DIVISION DEPICTING ANY ADJUSTMENTS TO THE FINAL PAVEMENT MARKINGS AND SIGNAGE, WHICH MAY INCLUDE OMITTING, ADDING OR MODIFYING PAVEMENT MARKINGS AND TRAFFIC CONTROL SIGNS SUCH THAT ADEQUATE TRANSITIONS AND LANE TERMINATIONS BETWEEN ADJACENT ROADWAY SEGMENTS ARE CONSTRUCTED.

REVISED 04/15/10

LAS VEGAS FIRE & RESCUE - GENERAL NOTES

1. ALL WORK SHALL BE DONE IN STRICT ACCORDANCE WITH THE LAS VEGAS FIRE AND RESCUE ADOPTED FIRE ORDINANCE #6325 FOR HYDRANT SPECIFICATIONS AND HYDRANT INSTALLATION SPECIFICATIONS.
2. ONLY FIRE HYDRANTS THAT ARE ON THE LAS VEGAS VALLEY WATER DISTRICT'S – APPROVED PRODUCTS LIST ARE ALLOWED TO BE INSTALLED.
3. A PERMIT IS REQUIRED FROM LAS VEGAS FIRE AND RESCUE FOR THE INSTALLATION OF ON-SITE WATER LINES AND FIRE HYDRANTS. THE PERMIT AND CONTRACTORS MATERIAL TEST CERTIFICATE FOR UNDERGROUND PIPING FORM SHALL BE OBTAINED FROM THE FIRE PROTECTION ENGINEER BEFORE COMMENCEMENT OF WORK. [IFC 105.7.12]
4. ON ANY RESIDENTIAL OR COMMERCIAL INSTALLATIONS, FIRE HYDRANTS SHALL BE INSTALLED AND FIRE APPARATUS ACCESS ROADS SHALL BE MAINTAINED BEFORE COMMENCEMENT OF ANY COMBUSTIBLE CONSTRUCTION. ALL FIRE HYDRANTS SHALL BE IN GOOD WORKING ORDER AND SHALL BE CAPABLE OF DELIVERING THE REQUIRED FIRE FLOW. [IFC 3310, 3312]
5. TO IDENTIFY THE FIRE HYDRANT LOCATIONS, THE CONTRACTOR SHALL PLACE A BLUE REFLECTIVE MARKER AT THE CENTER LINE OF STREET ADJACENT TO THE FIRE HYDRANTS. [IFC 507.5.7.3]
6. ALL UNDERGROUND INSPECTIONS, PRESSURE AND FLUSH VERIFICATIONS OF ALL FIRE HYDRANTS AND FIRE LINES, SHALL BE CONDUCTED BEFORE COVERING THE LINES. CENTER LOADING IS ACCEPTABLE FOR THE HYDRO TESTS WILL PRIOR FIRE PREVENTION APPROVAL. [IFC 106.3]
7. ALL ON-SITE UNDERGROUND WATER MAINS AND MATERIALS SHALL BE U.L. LISTED, A.W.W.A. APPROVED AND SHALL BE RATED FOR THE APPROPRIATE WORKING PRESSURE. [IFC 507.2.1, NFPA 24]
8. PAINTING OF CURBS, FIRE HYDRANTS, PADS, PROTECTION OF FIRE HYDRANTS FROM PHYSICAL DAMAGE, AND ALL OTHER WORK NECESSARY PER PLANS SHALL BE COMPLETED BEFORE APPROVAL BY LAS VEGAS FIRE AND RESCUE, FIRE PREVENTION DIVISION. [IFC 507]
9. PRIVATE FIRE HYDRANTS SHALL BE PAINTED RED. [IFC 507.5.7.1]

LAS VEGAS FIRE AND RESCUE - GENERAL NOTES (CONT.)

10. PRIOR TO THE FINAL OCCUPANCY, A FLOW TEST MUST BE WITNESSED BY LAS VEGAS FIRE AND RESCUE, FIRE PREVENTION DIVISION TO VERIFY AVAILABILITY OF THE REQUIRED FIRE FLOW. [IFC 507]
11. FIRE HYDRANTS SPACING SHALL BE AS FOLLOWS: [IFC 102]
    RESIDENTIAL – 500 FEET UNSPRINKLERED; 600 FEET SPRINKLERED.
    COMMERCIAL – 300 FEET UNSPRINKLERED; 400 FEET SPRINKLERED.
12. WHERE NEW WATER MAINS ARE EXTENDED ALONG STREETS OR NEW STREETS ARE INSTALLED WHERE FIRE HYDRANTS ARE NOT NEEDED FOR PROTECTION OF THE STRUCTURES, FIRE HYDRANTS SHALL BE INSTALLED AT MAXIMUM 1,000 FOOT SPACING, TO PROVIDE FOR TRANSPORTATION HAZARDS. WHERE STREETS ARE PROVIDED WITH MEDIAN DIVIDERS OR HAVE FOUR OR MORE TRAFFIC LANES AND HAVE A TRAFFIC COUNT OF MORE THAN 30,000 PER DAY, HYDRANTS ARE REQUIRED ON EACH SIDE OF THE STREET SPACED AT 500 FEET ON AN ALTERNATING BASIS. [IFC C102.8]
13. NO FIRE HYDRANTS SHALL BE LOCATED WITHIN THE REQUIRED RADIUS OF A CUL-DE-SAC OR WITHIN 20 FEET OF THE PERIMETER OF THE RADIUS OF THE CUL-DE-SAC.
14. NO FIRE HYDRANTS SHALL BE LOCATED WITHIN 6 FEET OF ANY CURB RETURN, DRIVEWAY, POWER POLE, STREETLIGHT OR ANY OTHER OBSTRUCTION. [IFC C102.12]
15. THE MAXIMUM DISTANCE FROM A FIRE HYDRANT TO A ONE-TWO FAMILY DWELLING SHALL NOT EXCEED 300 FEET, AS MEASURED BY AN APPROVED ROUTE. [IFC C102.4]
16. THE MAXIMUM DISTANCE FROM A FIRE HYDRANT TO A FIRE DEPARTMENT CONNECTION (FDC) SHALL NOT EXCEED 100 FEET, AS MEASURED BY AN APPROVED ROUTE. [IFC C102.7]
17. THE MAXIMUM DISTANCE FROM A FIRE HYDRANT TO THE END OF A DEAD-END STREET SHALL NOT EXCEED 200 FEET. [IFC C102.6]
18. TWO (2) SOURCES OF SUPPLY ARE REQUIRED WHENEVER THERE ARE 4 OR MORE FIRE HYDRANTS/SPRINKLER LEAD-INS ARE INSTALLED ON A SINGLE SYSTEM. SECTIONAL CONTROL VALVES SHALL BE INSTALLED SO THAT NO MORE THAN 2 FIRE HYDRANTS CAN BE OUT OF SERVICE DUE TO A BREAK IN A WATER MAIN. [IFC C104]
19. ALL FIRE APPARATUS ACCESS ROADS SHALL BE PAVED TO PROVIDE ALL-WEATHER DRIVING CAPABILITIES, AND SHALL BE DESIGNED AND MAINTAINED TO SUPPORT THE IMPOSED LOADS OF THE FIRE APPARATUS. [IFC 503.2.3]
20. THE GRADIENT FOR THE FIRE APPARATUS ACCESS ROADS SHALL NOT EXCEED 12%. ANGLES OF APPROACH AND ANGLES OF DEPARTURE SHALL NOT EXCEED 6% FOR 25 FEET PRIOR TO OR AFTER THE GRADE CHANGE. ADJACENT TO THE STRUCTURES GRADIENT SHALL NOT EXCEED 6%. [IFC 503.2.7, 503.2.8]
21. THE TURNING RADIUS OF THE FIRE APPARATUS ACCESS ROADS SHALL BE NO LESS THAN 52 FEET OUTSIDE AND 28 FEET INSIDE TURNING RADIUS. [IFC 503.2.4]
22. VERTICAL CLEARANCE OF ALL FIRE APPARATUS ACCESS ROADS SHALL BE NOT LESS THAN 13 FEET 6 INCHES. [IFC 503.2.1]
23. FIRE DEPARTMENT ACCESS SHALL HAVE A MINIMUM UNOBSTRUCTED WIDTH OF NOT LESS THAN 40 FEET FLOW LINE TO FLOW LINE WITH PARALLEL PARKING PERMITTED ON BOTH SIDES. NOT LESS THAT 32 FEET WIDE, FLOW LINE TO FLOW LINE, WHERE PARKING IS PERMITTED ONLY ON ONE SIDE OF THE FIRE APPARATUS ACCESS ROAD. NOT LESS THAT 24 FEET WIDE, FLOW LINE TO FLOW LINE, WHERE NO PARKING IS PERMITTED ON EITHER SIDE. FIRE LANES THROUGH PARKING LOTS SHALL NOT BE LESS THAN 24 FEET. [IFC 503.2.1.1]
24. A FIRE APPARATUS ACCESS ROAD SHALL BE REQUIRED WHAN ANY PORTION OF AN EXTERIOR WALL OF THE FIRST STORY IS LOCATED MORE THAN 150 FEET FROM A FIRE DEPARTMENT VEHICLE ACCESS. THIS DISTANCE COULD BE INCREASED TO 250 FEET IF THE BUILDING IS SPRINKLERED. [IFC 503.1.1]
25. APPROVED SECONDARY FIRE APPARATUS ACCESS SHALL BE PROVIDED FOR 100 OR MORE DWELLING UNITS, ROAD(S) WITH DEAD-ENDS OR WITH A SINGLE POINT OF ACCESS IN EXCESS OF 600 FEET. COMMERCIAL AND INDUSTRIAL DEVELOPMENTS WHERE BUILDINGS EXCEED 2 STORIES OR 30 FEET IN HEIGHT, OR EXCEEDING 62,000 SQUARE FEET IN AREA. [IFC 503.1.2]
26. ALL DEAD-END FIRE APPARATUS ACCESS ROADS AND/OR FIRE LANES, PUBLIC OR PRIVATE, IN EXCESS OF 150 FEET IN LENGTH SHALL BE PROVIDED WITH AN APPROVED TURN AROUND AREA HAVING A MINIMUM DIAMETER OF 81 FEET. [IFC 503.2.5]
27. ALL FIRE APPARATUS ACCESS ROADS SHALL BE MARKED BY PLACING APPROVED SIGNS AT THE START OF THE DESIGNATED FIRE LANE, ONE SIGN AT THE END OF THE FIRE LANE AND WITH SIGNS AT INTERVALS 100 FEET ALONG THE DESIGNATED FIRE LANES. SIGNS TO BE PLACED ON BOTH SIDES OF AN ACCESS ROADWAY IF NEEDED TO PREVENT PARKING ON EITHER SIDE. SIGNS TO BE INSTALLED NO HIGHER THAN 10 FEET OR LESS THAN 6 FEET FROM ROADWAY LEVEL. THE CURB ALONG OR ON THE PAVEMENT OR CEMENT (IF NO CURB IS NOT PROVIDED) SHALL BE PAINTED WITH A RED WEATHER RESISTANT PAINT IN ADDITION TO THE SIGNS. [IFC 503.3]
28. ELECTRICALLY CONTROLLED ACCESS GATES SHALL BE PROVIDED WITH AN APPROVED EMERGENCY VEHICLE DETECTOR/RECEIVER SYSTEM. SAID SYSTEM SHALL BE INSTALLED IN ACCORDANCE WITH THE IFC SECTION 503.6 AND IFC APPENDIX M.

EFFECTIVE MARCH 1, 2016

CITY OF LAS VEGAS SEWER NOTES

1. ALL CONSTRUCTION AND MATERIALS SHALL BE IN ACCORDANCE WITH THE LATEST EDITION OF THE DESIGN AND CONSTRUCTION STANDARDS FOR WASTEWATER COLLECTION SYSTEMS AND THE UNIFORM STANDARD SPECIFICATIONS FOR PUBLIC WORKS' CONSTRUCTION OFF-SITE IMPROVEMENTS, CLARK COUNTY AREA, NEVADA, AS AMENDED. IT WILL BE THE RESPONSIBILITY OF THE CONTRACTOR TO BE AWARE OF THE CONTENTS OF THE ABOVE SPECIFICATIONS.
2. IT SHALL BE THE CONTRACTOR'S RESPONSIBILITY TO PERFORM CONSTRUCTION AS PER PLANS. ANY ADDITIONS, DELETIONS, OR CHANGES SHALL FIRST MEET WITH THE APPROVAL OF THE CITY ENGINEER.
3. CHISEL "S" OR "G" IN CURBS WHERE SEWER OR GAS LATERALS PASS UNDER THE CURB.
4. POLYVINYL (PVC) SEWER PIPE SHALL MEET ASTM D-3034 SDR 35 SPECIFICATIONS, INSTALLED WITH SAND BEDDING AND BACKFILL OF TYPE II AGGREGATE BASE.
5. ALL MANHOLES PAVED IN STREETS EIGHTY (80') FOOT R/W AND LARGER SHALL HAVE CONCRETE COLLARS. STREETS LESS THAN EIGHTY (80') FOOT R/W WILL REQUIRE RETROFIT IF PAVING DOES NOT CONFORM TO CITY STANDARDS AT THE MANHOLE.
6. TEE SADDLES SHALL BE USED TO CONNECT SEWER LATERALS TO EXISTING MAIN LINES UP TO TWELVE INCH (12") DIAMETER. CONNECTIONS TO FIFTEEN INCH (15") OR LARGER MAINS SHALL REQUIRE SPECIAL PROCEDURES. IN LINE "Y"S SHALL BE USED ON LINES TWELVE INCHES (12") OR ABOVE.
7. WATER MAINS SHALL BE PROTECTED IN ACCORDANCE WITH LVVWD STANDARDS WHENEVER A SEWER MAIN CROSSES OVER A WATER MAIN OR THE SEWER IS LESS THAN EIGHTEEN INCH (18") UNDER A WATER MAIN.
8. ALL CONTRACTORS INSTALLING SEWER MAINS THAT WILL BE UNDER THE JURISDICTION OF THE CITY OF LAS VEGAS MUST BE STATE OF NEVADA CLASS "A" CONTRACTORS.
9. THE CITY OF LAS VEGAS WILL NOT ACCEPT ANY SEWER MAINS WHICH HAVE A VERTICAL DEFLECTION OF MORE THAN ONE TENTH (0.1) OF A FOOT FROM THE APPROVED CONSTRUCTION PLANS AT ANY LOCATION. SEWER MAINS FOUND TO EXCEED THIS TOLERANCE WILL HAVE TO BE REPAIRED OR REMOVED OR REPLACED TO THE SATISFACTION OF THE CITY ENGINEER PRIOR TO ACCEPTANCE BY THE CITY OF LAS VEGAS.
10. INSTALLATION OF CURVED SEWER REQUIRES THE USE OF C-900 PIPE WHICH ALLOWS FOR PIPE DEFLECTION AT THE JOINTS.

REVISED 04/15/10

SOUTHERN NEVADA - SOUTHWEST GAS CORPORATION GENERAL NOTES

1. IN THE EVENT OF NATURAL GAS EMERGENCIES CALL 911 AND 1-877-860-6020
2. THERE SHALL BE A MINIMUM HORIZONTAL AND VERTICAL CLEARANCE OF 12-INCHES BETWEEN NATURAL GAS FACILITIES AND ANY UNDERGROUND FACILITIES AND/OR STRUCTURES, INCLUDING BUT NOT LIMITED TO WATER, SEWER, STORM DRAIN, COMMUNICATIONS, AND ELECTRIC
3. FOR VALVE ADJUSTMENT CONTACT 702-668-6107 48 HOURS PRIOR TO CONSTRUCTION
4. IN THE EVENT OF A NATURAL GAS CONFLICT WITH PROPOSED UTILITIES AND/OR STRUCTURES CONTACT 702-365-2099

[signature] 2/14/19
LAS VEGAS FIRE AND RESCUE DATE

LAS VEGAS VALLEY WATER DISTRICT STANDARD NOTES

LVVWD PROJECT # 136266

1. NO WORK SHALL BEGIN UNTIL THE WATER PLANS HAVE BEEN APPROVED FOR CONSTRUCTION BY THE LVVWD. FOLLOWING WATER PLAN APPROVAL, NOTICE SHALL BE GIVEN TO THE LVVWD COMMUNICATION SUPPORT CENTER (258-7171) TWO (2) WORKING DAYS PRIOR TO THE START OF CONSTRUCTION. FOR FUTURE INSPECTIONS, NOTICE MUST BE GIVEN BY 2:00 P.M. THE BUSINESS DAY PRIOR TO THE REQUESTED LVVWD INSPECTION. WHEN REQUESTING INSPECTIONS, PLEASE REFER TO THE PROJECT# IDENTIFIED ABOVE.
2. ALL WORK SHALL CONFORM TO LVVWD STANDARD PLATES, DRAWINGS, AND SPECIFICATIONS, AND TO THE 2010 EDITION OF THE UNIFORM DESIGN AND CONSTRUCTION STANDARDS FOR POTABLE WATER SYSTEMS (UDACS). THE LATEST EDITION OF UDACS SHALL SUPERSEDE ANY CONFLICTS CONTAINED IN THE APPROVED DRAWINGS AND/OR SPECIFICATIONS.
3. ALL WORK, EXCEPT AS MODIFIED BY THESE PLANS OR BY NOTE 2 ABOVE, SHALL BE DONE IN ACCORDANCE WITH THE MOST RECENT DRAFT OR EDITION OF THE UNIFORM STANDARD SPECIFICATIONS FOR PUBLIC WORKS CONSTRUCTION OFFSITE IMPROVEMENT, CLARK COUNTY AREA.
4. A SINGLE PIPE MATERIAL SHALL BE USED THROUGHOUT THE PROJECT UNLESS OTHERWISE APPROVED BY THE LVVWD.
5. ALL SERVICE LATERALS TWO (2) INCHES IN DIAMETER AND SMALLER SHALL BE TYPE K COPPER TUBING WITH LVVWD APPROVED SERVICE SADDLES.
6. ALL WATER METER BOXES SHALL BE LOCATED OUTSIDE OF DRIVEWAY AREAS.
7. ALL VALVES SHALL BE LOCATED OUTSIDE OF DRIVEWAYS, VALLEY AND CURB GUTTERS.
8. ALL WATER AND STORM DRAIN OR SANITARY SEWER CROSSINGS SHALL CONFORM TO SECTION 2.22 OF THE 2010 EDITION OF THE UDACS.
9. ALL WATER FACILITIES SHALL BE FILLED, DISINFECTED, PRESSURE TESTED, FLUSHED, FILLED AND AN ACCEPTABLE WATER SAMPLE OBTAINED, PRIOR TO CONNECTION TO THE LVVWD DISTRIBUTION SYSTEM.
10. THE CONTRACTOR MUST OBTAIN ALL METERS TWO (2) INCHES AND SMALLER FROM LVVWD CENTRAL STORES. TELEPHONE 258-3152 OR 258-3802, TWO (2) WORKING DAYS PRIOR TO METER PICKUP.
11. ANY INTERRUPTION OF SERVICE MUST BE PERFORMED IN ACCORDANCE WITH UDACS SECTION 3.14.01, AND APPROVED BY THE LVVWD INSPECTION DIVISION PRIOR TO SHUTDOWN. PROPER WRITTEN NOTIFICATION MUST BE GIVEN TO ALL AFFECTED CUSTOMERS.
12. ALL WATER FACILITY CONSTRUCTION MATERIALS USED MUST BE AS LISTED ON THE LVVWD PRE-APPROVED MATERIALS AND MANUFACTURER'S LISTING FOR NEW FACILITIES, LATEST REVISION, OR SPECIFICALLY APPROVED ON THESE PLANS.
13. TELEPHONE "CALL BEFORE YOU DIG" AT "811" OR 1-800-227-2600
14. THE INSTALLATION OF LAS VEGAS VALLEY WATER DISTRICT (LVVWD) MUNICIPAL WATER FACILITIES WITHIN ALL STREETS IS ASSUMED TO BE IN COMPLIANCE WITH THE UNIFORM STANDARDS, INCLUDING THE PLACEMENT OF ASPHALT PAVING STREET SURFACES. ANY REPAIR WORK DONE BY THE LVVWD TO THE MUNICIPAL FACILITIES WILL INCLUDE THE PLACEMENT OF ANY APPROPRIATELY SIZED ASPHALT REPAIR PATCH ON THE STREET SURFACE.

    ANY DECORATIVE PAVING SURFACE WITHIN THE STREET IS THE RESPONSIBILITY OF THE OWNER'S ASSOCIATION, OR THE INDIVIDUAL PROPERTY OWNERS IF NO OWNER'S ASSOCIATION IS IN EXISTENCE, OR THE AGENCY HAVING JURISDICTION. DECORATIVE SURFACE MATERIALS PLACED WITHIN THE TEN FOOT EASEMENT ABUTTING A PUBLIC OR PRIVATE STREET, IF DISTURBED BY THE LVVWD DURING THE REPAIR OR OPERATION OF ITS FACILITIES, WILL BE REPLACED BY LVVWD WITH AN APPROPRIATELY SIZED PLAIN FINISH CONCRETE PATCH. THE LVVWD WILL NOT RESTORE, AND WILL NOT BE RESPONSIBLE FOR THE RESTORATION OF, ANY DECORATIVE PAVING SURFACE WITHIN THE STREET. THE LVVWD WILL NOT ATTEMPT TO MATCH COLOR OR FINISH OF ANY ADJACENT MATERIALS.

APPROVED FOR CONSTRUCTION
[signature]
LAS VEGAS VALLEY WATER DISTRICT ENGINEERING SERVICES
PROJECT No. 136266 FIRST APPROVED DATE: 2-4-19

ABBREVIATIONS

@	AT	MH	MANHOLE
AC	ASPHALTIC CONCRETE	MLCP	MULTI-LAYER COMPOSITE PIPE
ACP	ASBESTOS CEMENT PIPE	NTS	NOT TO SCALE
AEP	AUTHORIZATION TO ENTER PROPERTY	NVE	NV ENERGY
APPROX.	APPROXIMATE	OHP	OVERHEAD POWER LINE
B/C, BC	BACK OF CURB	PC	POINT OF CURVE
BCR	BACK OF CURB RADIUS	P.I.P.	PROTECT IN PLACE
BM	BENCHMARK	PP	POWER POLE
BOT	BOTTOM	PT	POINT OF TANGENCY
C	CONCRETE	PROP./PR.	PROPOSED
B.R.	BACK OF RAMP	PRC	POINT OF REVERSE CURVE
℄, CL	CENTERLINE	PB	PULLBOX
CATV	CABLE T.V.	⅊, PL	PROPERTY LINE
CIPP	CURED-IN-PLACE PIPE	R	RADIUS
CLV	CITY OF LAS VEGAS	RT	RIGHT
CONC.	CONCRETE	R/W, R.O.W.	RIGHT OF WAY
COND.	CONDUCTOR	SCCP	STEEL CYLINDER CONCRETE PIPE
CLSM	CONTROLLED LOW STRENGTH MATERIAL	SD	STORM DRAIN
C & G	CURB AND GUTTER	SF	SQUARE FOOT
D/W	DRIVEWAY	SS	SANITARY SEWER
DWG.	DRAWING	STA.	STATION
ECR	END OF CURB RETURN (AT B/C)	STD	STANDARD
ELEC.	ELECTRIC	SY	SQUARE YARD
EOP, EP	EDGE OF PAVEMENT	S/W	SIDEWALK
ELEV.	ELEVATION	T	TELEPHONE LINE
EXIST., EX.	EXISTING	TC	TOP OF CURB
EXOH	EXISTING OVERHEAD UTILITY	TEL	TELEPHONE
FD	FOUND	TRANS.	TRANSITION
FL	FLOWLINE	T.R.C.	TOP OF RAMP CURB
FG	FINISHED GRADE	TS	TRAFFIC SIGNAL
FH	FIRE HYDRANT	TYP.	TYPICAL
FT.	FOOT/FEET	USD	UNIFORM STD DRAWING
FC	FACE OF CURB	USS	UNIFORM STD SPECIFICATIONS
G	GAS	W	WATER LINE
GV	GAS VALVE	WC	WHEEL CHAIR
GW	GUY WIRE	WM	WATER METER
INT.	INTERSECTION	WV	WATER VALVE
IRR	IRRIGATION	W/	WITH
L	LENGTH	△	INCLUDED DELTA ANGLE
LF	LINEAL FOOT, LINEAR FEET		
LS	LANDSCAPE		
LT	LEFT		

L18-02241 107V7656

No.	REVISIONS	DATE	BY

Kimley»Horn
© 2019 KIMLEY-HORN AND ASSOCIATES, INC.
6671 LAS VEGAS BOULEVARD S., SUITE 320, LAS VEGAS, NV 89119
PHONE: 702-862-3600
WWW.KIMLEY-HORN.COM

PROFESSIONAL ENGINEER STATE OF NEVADA
THOMAS ACKERET
Exp. 12/31/20
CIVIL
No. 18592
01/25/2019

KHA PROJECT	DATE	SCALE	DESIGNED BY	DRAWN BY	CHECKED BY
092954000	01/25/2019	AS SHOWN	CJJ	GP	TEA

GENERAL NOTES

RESTAURANT PAD - CENTENNIAL CENTER
CIVIL IMPROVEMENT PLANS
PREPARED FOR
KITE REALTY
CITY OF LAS VEGAS NEVADA

SHEET NUMBER
C0.2

PROJ#:136266A QS:125-28-NE

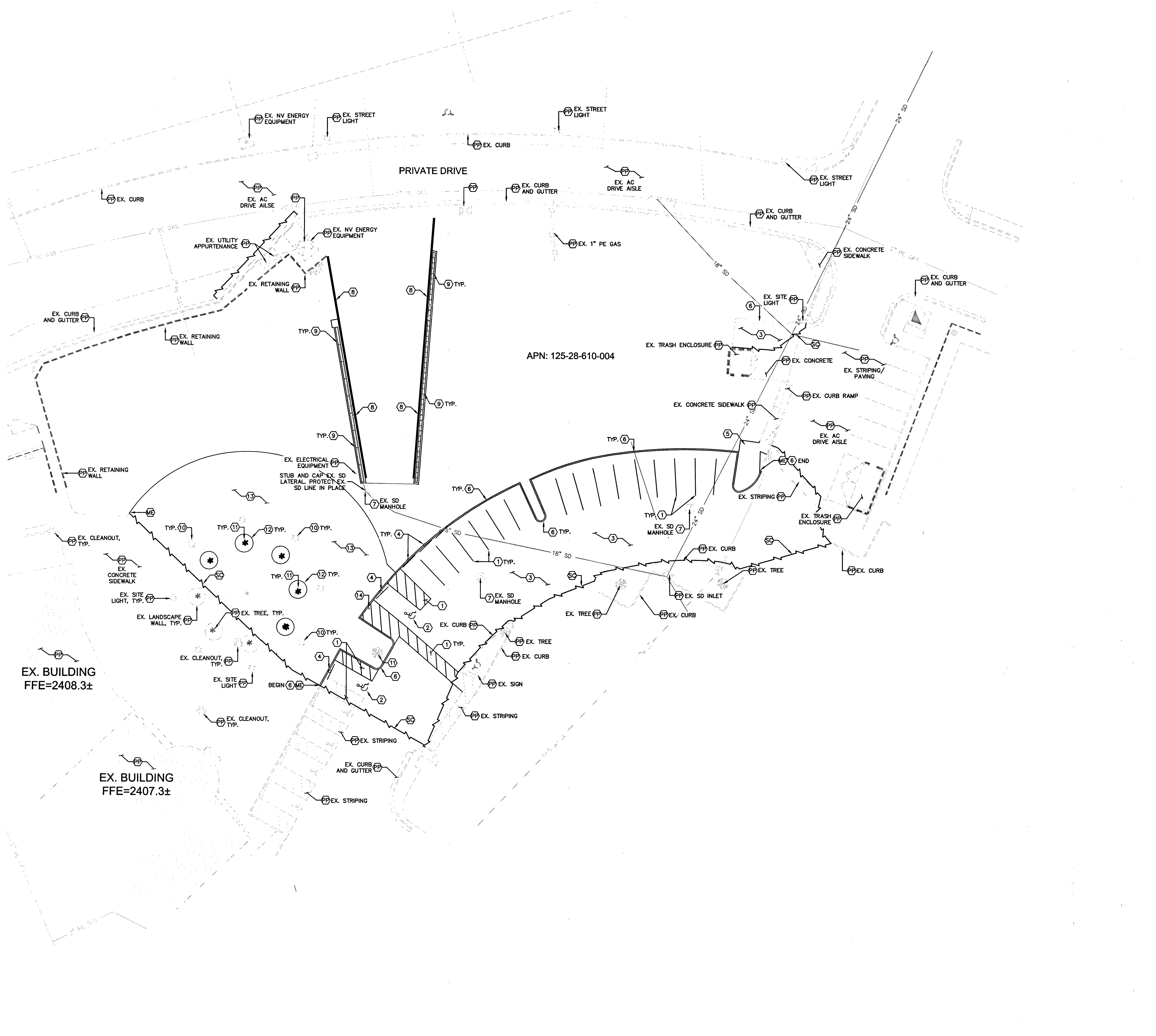

GENERAL NOTES

1. CONTRACTOR TO VERIFY EXISTING IMPROVEMENTS SHOWN ON THE PLAN.
2. CONTRACTOR TO PROTECT IN PLACE, DURING DEMOLITION AND CONSTRUCTION, ALL EXISTING IMPROVEMENTS THAT ARE TO REMAIN AS NOTED ON THE PLAN.
3. ANY EXISTING STRUCTURE, IMPROVEMENT, OR APPURTENANCE TO REMAIN THAT IS DAMAGED DURING DEMOLITION OR CONSTRUCTION SHALL BE IMMEDIATELY REPAIRED OR REPLACED BY THE CONTRACTOR AT THE CONTRACTOR'S EXPENSE.
4. CONTRACTOR SHALL VERIFY AND LOCATE ALL EXISTING UNDERGROUND UTILITIES BEFORE CONSTRUCTION AND PROTECT IN PLACE UNLESS NOTED ON THE PLANS.
5. ALL DIMENSIONS ARE MEASURED FROM BACK OF CURB UNLESS OTHERWISE NOTED ON PLANS.

DEMOLITION NOTES

- (1) OBLITERATE EXISTING STRIPING
- (2) OBLITERATE EXISTING PAVEMENT LEGEND
- (3) SAWCUT AND REMOVE EXISTING AC PAVING, LIMITS AS NOTED ON PLAN.
- (4) REMOVE EXISTING SIGN.
- (5) REMOVE AND REPLACE EXISTING LANDSCAPE AS NECESSARY FOR CONSTRUCTION OF IMPROVEMENTS.
- (6) REMOVE EXISTING CONCRETE CURB TO NEAREST JOINT, LIMITS AS NOTED ON PLAN.
- (7) ADJUST EXISTING UTILITY APPURTENANCE TO PROPOSED FINISH GRADE.
- (8) REMOVE EXISTING RETAINING WALL.
- (9) REMOVE EXISTING TRENCH DRAIN.
- (10) REMOVE EXISTING SITE LIGHT. SALVAGE PER OWNER'S DIRECTION.
- (11) REMOVE EXISTING TREE.
- (12) REMOVE EXISTING LANDSCAPE WALL. STUB AND CAP EXISTING ELECTRICAL TO MAINTAIN CIRCUITRY.
- (13) REMOVE EXISTING CONCRETE SIDEWALK, LIMITS AS NOTED ON PLAN.
- (14) REMOVE EXISTING BOLLARD
- (ME) MATCH EXISTING
- (PP) MATCH IN PLACE
- (SC) SAWCUT, MATCH EXISTING

BASIS OF BEARING

NORTH 00°24'48" WEST, BEING THE WEST LINE OF THE NORTHEAST QUARTER (NE ¼) OF SECTION 28, TOWNSHIP 19 SOUTH, RANGE 60 EAST, M.D.M. AS SHOWN IN BOOK 95, PAGE 34 OF PLATS ON FILE AT THE CLARK COUNTY, NEVADA, RECORDER'S OFFICE.

BENCHMARK

CITY OF LAS VEGAS VERTICAL CONTROL
BENCHMARK NO. "5LV9028NE6"

MONUMENT DESCRIPTION IN THE TOP OF CURB AT THE NORTHEAST CORNER OF CENTENNIAL CENTER BOULEVARD AND TROPICAL PARKWAY (NORTHWEST CORNER OF CENTENNIAL CENTER BOULEVARD AND AZURE DRIVE).

ELEVATION = 734,784 METERS
2410.70 FEET

CITY OF LAS VEGAS VERTICAL CONTROL DATUM BASED UPON NORTH AMERICAN VERTICAL DATUM OF 1988 (NAVD '88)

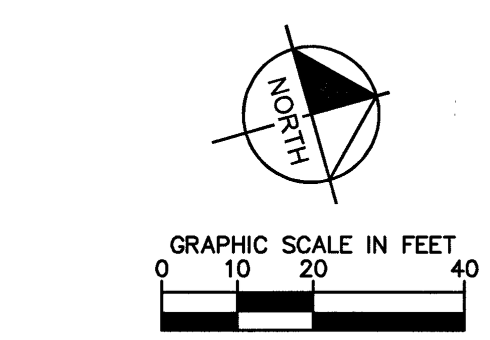

L18-02241 107V 7656

No.	REVISIONS	DATE	BY

Kimley»Horn
© 2018 KIMLEY-HORN AND ASSOCIATES, INC.
6671 LAS VEGAS BOULEVARD S., SUITE 320, LAS VEGAS, NV 89119
PHONE: 702-862-3600
WWW.KIMLEY-HORN.COM

PROFESSIONAL ENGINEER STATE OF NEVADA
THOMAS ACKERET
Exp. 12/31/20
CIVIL
No. 18592
01/25/2019

KHA PROJECT 092954000
DATE 01/25/2019
SCALE AS SHOWN
DESIGNED BY CJJ
DRAWN BY GP
CHECKED BY TEA

DEMOLITION PLAN

RESTAURANT PAD - CENTENNIAL CENTER
CIVIL IMPROVEMENT PLANS
PREPARED FOR
KITE REALTY
CITY OF LAS VEGAS NEVADA

SHEET NUMBER
C1.0

Plotted By: Pierert, Griffin Sheet Set: Kha Layout: C1.0 January 31, 2019 09:48:06am K:\LAV_Civil\092954000-Kite Centennial Center\CAD\Plansheets\Panera - Landlord\092954000-DM.dwg
This document, together with the concepts and designs presented herein, as an instrument of service, is intended only for the specific purpose and client for which it was prepared. Reuse of and improper reliance on this document without written authorization and adaptation by Kimley-Horn and Associates, Inc. shall be without liability to Kimley-Horn and Associates, Inc.

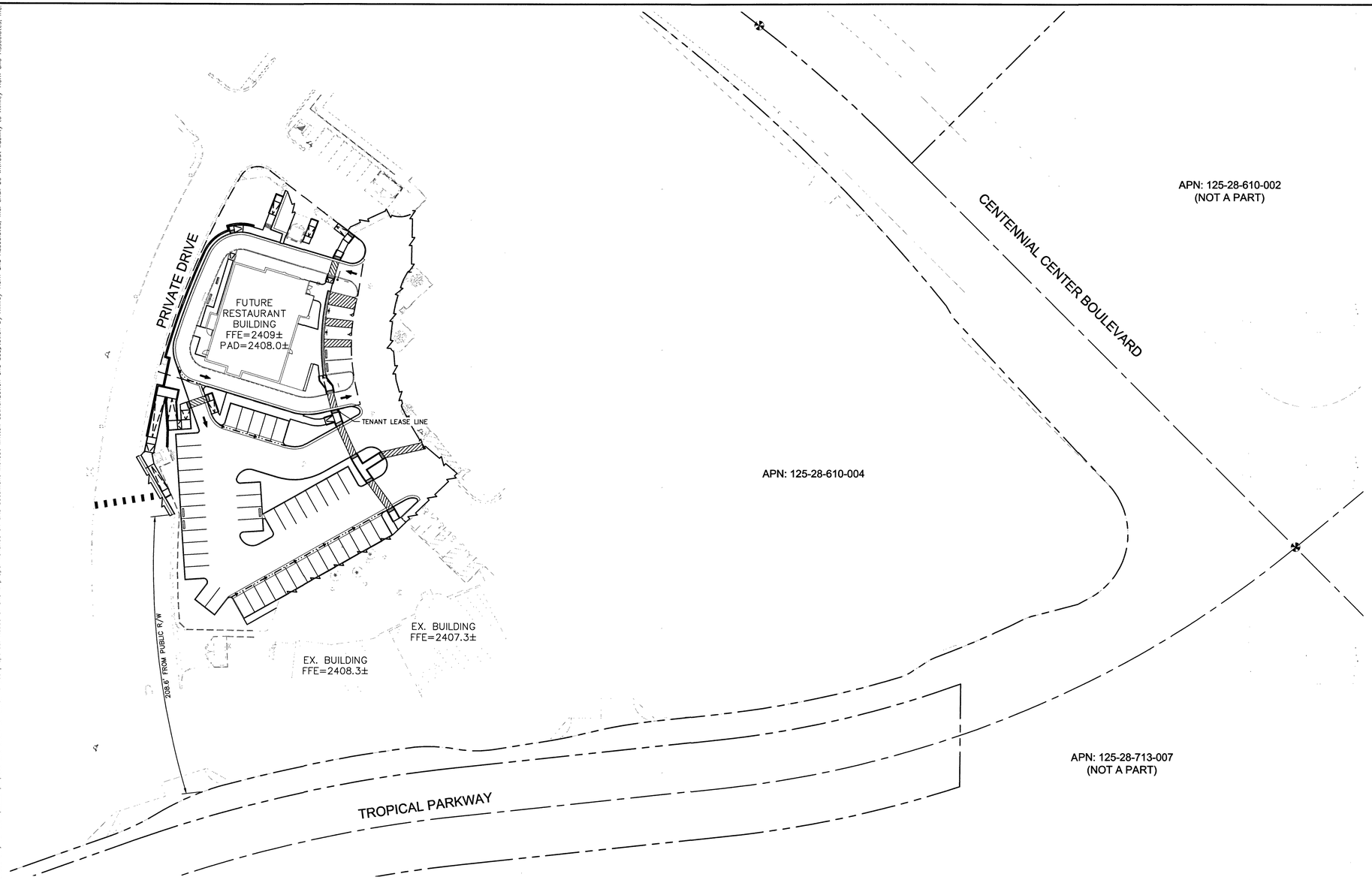

GENERAL NOTES

1. CONTRACTOR TO VERIFY EXISTING IMPROVEMENTS SHOWN ON THE PLAN.
2. CONTRACTOR TO PROTECT IN PLACE, DURING DEMOLITION AND CONSTRUCTION, ALL EXISTING IMPROVEMENTS THAT ARE TO REMAIN AS NOTED ON THE PLAN.
3. ANY EXISTING STRUCTURE, IMPROVEMENT, OR APPURTENANCE TO REMAIN THAT IS DAMAGED DURING DEMOLITION OR CONSTRUCTION SHALL BE IMMEDIATELY REPAIRED OR REPLACED BY THE CONTRACTOR AT THE CONTRACTOR'S EXPENSE.
4. CONTRACTOR SHALL VERIFY AND LOCATE ALL EXISTING UNDERGROUND UTILITIES BEFORE CONSTRUCTION AND PROTECT IN PLACE UNLESS NOTED ON THE PLANS.
5. ALL DIMENSIONS ARE MEASURED FROM BACK OF CURB UNLESS OTHERWISE NOTED ON PLANS.

NOTE:
IMPROVEMENTS SHOWN WITHIN TENANT LEASE LINE ARE FOR REFERENCE ONLY

BASIS OF BEARING

NORTH 00°24'48" WEST, BEING THE WEST LINE OF THE NORTHEAST QUARTER (NE ¼) OF SECTION 28, TOWNSHIP 19 SOUTH, RANGE 60 EAST, M.D.M. AS SHOWN IN BOOK 95, PAGE 34 OF PLATS ON FILE AT THE CLARK COUNTY, NEVADA, RECORDER'S OFFICE.

BENCHMARK

CITY OF LAS VEGAS VERTICAL CONTROL
BENCHMARK NO. "5LV9028NE6"

MONUMENT DESCRIPTION IN THE TOP OF CURB AT THE NORTHEAST CORNER OF CENTENNIAL CENTER BOULEVARD AND TROPICAL PARKWAY (NORTHWEST CORNER OF CENTENNIAL CENTER BOULEVARD AND AZURE DRIVE).

ELEVATION = 734.784 METERS
2410.70 FEET

CITY OF LAS VEGAS VERTICAL CONTROL DATUM BASED UPON NORTH AMERICAN VERTICAL DATUM OF 1988 (NAVD '88)

NORTH

GRAPHIC SCALE IN FEET
0 20 40 80
SCALE: 1" = 40'

AVOID HITTING UNDERGROUND TRAFFIC SIGNAL SYSTEM AND STREET LIGHT SYSTEM CONDUITS
CALL BEFORE YOU DIG UNDERGROUND
Call before you UnderGround
1-702-432-5300
FREEWAY AND ARTERIAL SYSTEM OF TRANSPORTATION (FAST)

Call before you Dig
Avoid cutting underground utility lines. It's costly.
CALL 811 OR 1-800-227-2600

Avoid overhead power line contact. It's costly.
Call Before You Overhead
1-702-227-2929

L18-02241 107V7656

No.	REVISIONS	DATE	BY

Kimley»Horn
© 2018 KIMLEY-HORN AND ASSOCIATES, INC.
7671 LAS VEGAS BOULEVARD S., SUITE 320, LAS VEGAS, NV 89119
PHONE: 702-862-3600
WWW.KIMLEY-HORN.COM

PROFESSIONAL ENGINEER
THOMAS J. ACKERET
Exp. 12/31/20
CIVIL
No. 18592
STATE OF NEVADA

01/25/2019

KHA PROJECT	092954000
DATE	01/25/2019
SCALE	AS SHOWN
DESIGNED BY	CJJ
DRAWN BY	GP
CHECKED BY	TEA

HORIZONTAL CONTROL PLAN 1

RESTAURANT PAD - CENTENNIAL CENTER
CIVIL IMPROVEMENT PLANS
PREPARED FOR
KITE REALTY
CITY OF LAS VEGAS NEVADA

SHEET NUMBER
C2.0

Plotted By:Pienert, Griffin Sheet Set:Kha Layout:C2.0 January 31, 2019 09:48:13am K:\LAV_Civil\092954000-Kite Centennial Center\CAD\Plansheets\Panera - Landlord\092954000-HC.dwg
This document, together with the concepts and designs presented herein, as an instrument of service, is intended only for the specific purpose and client for which it was prepared. Reuse of and improper reliance on this document without written authorization and adaptation by Kimley-Horn and Associates, Inc. shall be without liability to Kimley-Horn and Associates, Inc.

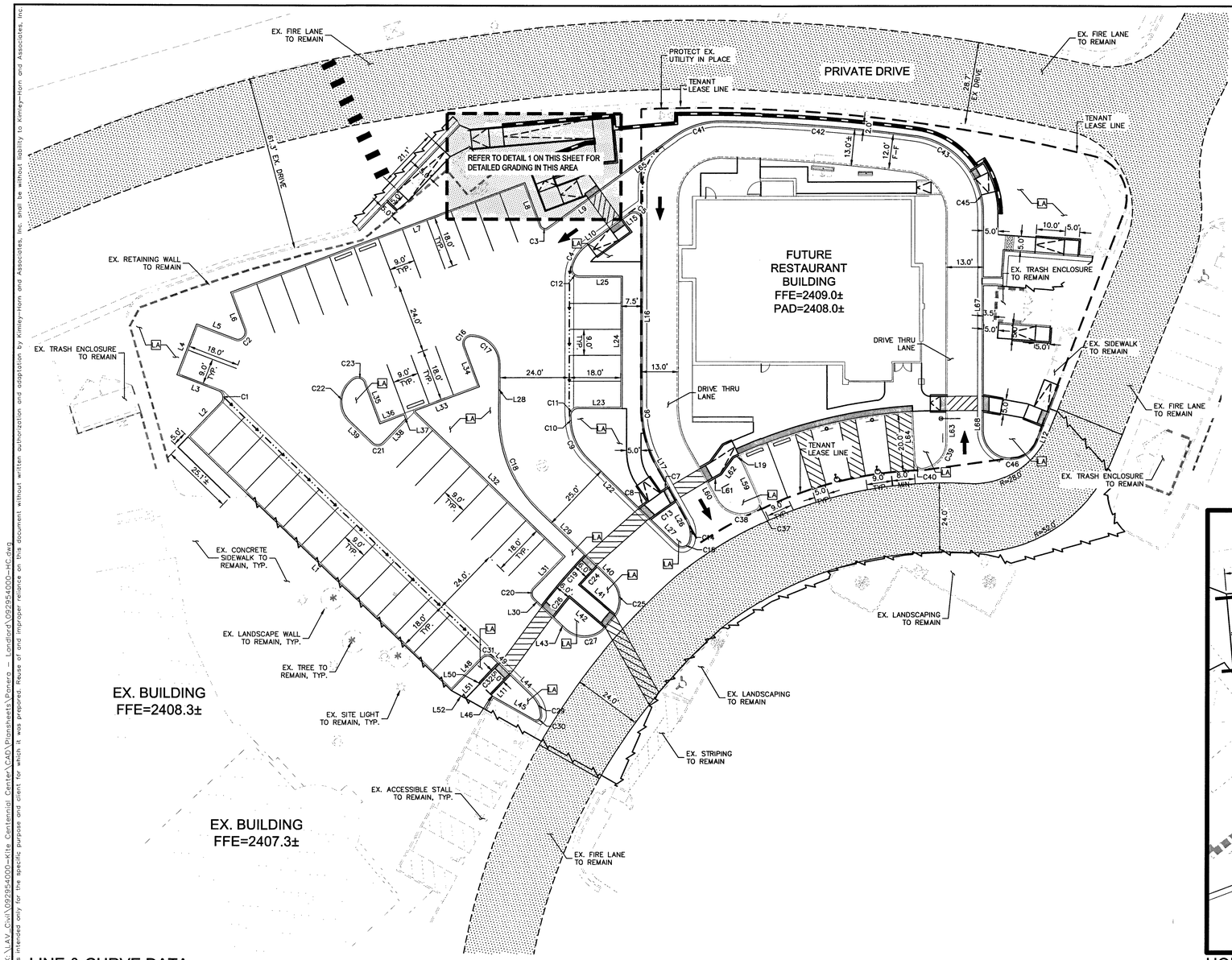

FIRE NOTES / LEGEND

FIRE TRUCK ACCESS ROUTE

R=52' / 24' TYP / R=28' — MINIMUM FIRE TURNING TEMPLATE

GENERAL NOTES

1. CONTRACTOR TO VERIFY EXISTING IMPROVEMENTS SHOWN ON THE PLAN.
2. CONTRACTOR TO PROTECT IN PLACE, DURING DEMOLITION AND CONSTRUCTION, ALL EXISTING IMPROVEMENTS THAT ARE TO REMAIN AS NOTED ON THE PLAN.
3. ANY EXISTING STRUCTURE, IMPROVEMENT, OR APPURTENANCE TO REMAIN THAT IS DAMAGED DURING DEMOLITION OR CONSTRUCTION SHALL BE IMMEDIATELY REPAIRED OR REPLACED BY THE CONTRACTOR AT THE CONTRACTOR'S EXPENSE.
4. CONTRACTOR SHALL VERIFY AND LOCATE ALL EXISTING UNDERGROUND UTILITIES BEFORE CONSTRUCTION AND PROTECT IN PLACE UNLESS NOTED ON THE PLANS.
5. ALL DIMENSIONS ARE MEASURED FROM BACK OF CURB UNLESS OTHERWISE NOTED ON PLANS.

HORIZONTAL CONTROL NOTES

LA LANDSCAPE AREA

NOTE:
IMPROVEMENTS SHOWN WITHIN TENANT LEASE LINE ARE FOR REFERENCE ONLY

BASIS OF BEARING

NORTH 00°24'48" WEST, BEING THE WEST LINE OF THE NORTHEAST QUARTER (NE ¼) OF SECTION 28, TOWNSHIP 19 SOUTH, RANGE 60 EAST, M.D.M. AS SHOWN IN BOOK 95, PAGE 34 OF PLATS ON FILE AT THE CLARK COUNTY, NEVADA, RECORDER'S OFFICE.

BENCHMARK

CITY OF LAS VEGAS VERTICAL CONTROL
BENCHMARK NO. "5LV9028NE6"

MONUMENT DESCRIPTION IN THE TOP OF CURB AT THE NORTHEAST CORNER OF CENTENNIAL CENTER BOULEVARD AND TROPICAL PARKWAY (NORTHWEST CORNER OF CENTENNIAL CENTER BOULEVARD AND AZURE DRIVE).

ELEVATION = 734.784 METERS
2410.70 FEET

CITY OF LAS VEGAS VERTICAL CONTROL DATUM BASED UPON NORTH AMERICAN VERTICAL DATUM OF 1988 (NAVD '88)

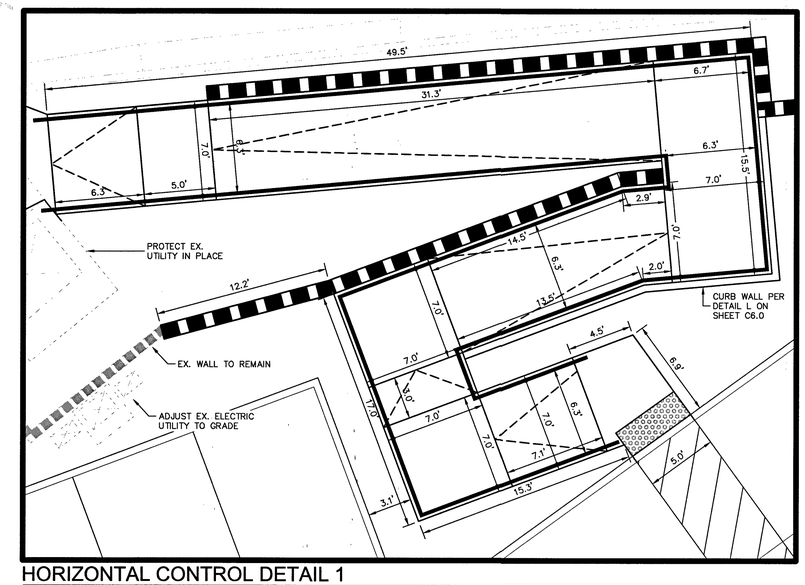

HORIZONTAL CONTROL DETAIL 1

SCALE: 1" = 5'

LINE & CURVE DATA

LINE TABLE		
LINE	LENGTH	BEARING
L1	127.00	S59°47'50.73"W
L2	16.53	N30°12'09.27"W
L3	15.43	S36°51'39.08"W
L4	19.00	N53°08'20.92"W
L5	14.42	N36°51'39.08"E
L6	13.87	S85°23'23.35"W
L7	109.00	N4°36'36.65"W
L8	16.03	S85°23'23.35"W
L9	17.42	S20°03'39.96"E
L10	8.97	S20°03'39.96"E
L11	9.46	S30°12'09.27"E
L12	5.35	S52°27'15.02"E
L15	3.00	S20°03'39.96"E
L16	64.99	S74°06'55.49"E
L17	7.83	S76°36'40.91"W
L19	2.01	S8°22'35.96"E
L22	24.28	S59°47'50.73"W
L23	15.43	N15°53'04.51"E
L24	46.00	N74°06'55.49"W
L25	15.05	S15°53'04.51"W

LINE TABLE		
LINE	LENGTH	BEARING
L26	7.51	S76°22'52.18"W
L27	12.62	N59°47'50.73"E
L28	18.79	S74°06'55.49"E
L29	22.47	N59°47'50.73"E
L30	3.32	N59°47'50.73"E
L31	15.50	S30°12'09.27"E
L32	72.76	S59°47'50.73"W
L33	24.19	N4°36'36.65"W
L34	15.08	S85°23'23.35"W
L35	15.26	N85°23'23.35"E
L36	8.97	N4°36'36.65"W
L37	1.57	S85°23'23.35"W
L38	11.36	S30°12'09.27"E
L39	10.76	S59°47'50.73"W
L40	6.69	N59°47'50.73"E
L41	15.85	S56°24'36.68"W
L42	15.98	N56°24'36.68"E
L43	6.43	S59°26'25.50"W
L44	11.07	S59°51'37.18"W
L45	16.49	N45°11'24.60"E

LINE TABLE		
LINE	LENGTH	BEARING
L46	0.67	N59°47'50.73"E
L48	15.50	N30°12'09.27"W
L49	4.47	S59°47'50.73"W
L50	0.50	N59°47'50.73"E
L51	7.07	N30°12'09.27"W
L52	5.69	S44°52'27.51"W
L59	17.03	S81°48'47.49"W
L60	6.85	S76°36'40.91"W
L61	5.31	S13°23'19.09"E
L62	7.20	S38°11'12.51"E
L63	10.43	S74°06'55.49"E
L64	17.42	N76°49'44.25"W
L65	31.36	S20°03'39.96"E
L67	63.66	N74°06'55.49"W
L68	5.78	N74°06'55.49"W

CURVE TABLE						
CURVE	RADIUS	LENGTH	CHORD BEARING	CHORD	DELTA	TANGENT
C1	2.50'	4.93'	N86°40'15"W	4.17'	112°56'12"	3.77'
C2	2.50'	5.74'	N28°52'29"W	4.56'	131°28'16"	5.55'
C3	1.50'	2.76'	N32°39'52"E	2.39'	105°27'03"	1.97'
C4	14.50'	9.68'	S39°10'37"E	9.50'	38°13'54"	5.03'
C5	2.50'	5.50'	S42°54'42"W	4.45'	125°56'44"	4.90'
C6	42.50'	21.71'	S88°45'07"E	21.48'	29°16'24"	11.10'
C7	173.25'	2.93'	S17°48'04"E	2.93'	0°58'04"	1.46'
C8	173.25'	3.48'	S20°50'43"E	3.48'	1°09'08"	1.74'
C9	19.50'	14.09'	N80°29'37"E	13.78'	41°23'32"	7.37'
C10	67.00'	2.37'	S77°47'45"E	2.37'	2°01'45"	1.19'
C11	2.50'	4.04'	S30°26'54"E	3.62'	92°39'57"	2.62'
C12	2.50'	4.62'	N68°47'45"E	3.99'	105°49'21"	3.31'
C13	167.25'	10.64'	S19°16'52"E	10.64'	3°38'44"	5.32'
C14	9.39'	7.45'	N80°56'52"W	7.25'	45°27'36"	3.93'
C15	2.50'	5.16'	N0°38'43"E	4.29'	118°18'16"	4.19'
C16	2.50'	4.80'	S39°36'36"E	4.10'	110°00'02"	3.57'
C17	9.50'	15.00'	S60°38'15"W	13.49'	90°29'39"	9.58'
C18	44.50'	35.79'	N82°50'28"E	34.84'	46°05'14"	18.93'
C19	173.25'	23.06'	S33°32'10"E	23.04'	7°37'30"	11.55'
C20	2.50'	3.93'	S75°12'09"E	3.54'	90°00'00"	2.50'

CURVE TABLE						
CURVE	RADIUS	LENGTH	CHORD BEARING	CHORD	DELTA	TANGENT
C21	2.50'	3.93'	N14°47'51"E	3.54'	90°00'00"	2.50'
C22	9.50'	16.68'	S69°54'57"E	14.62'	100°34'24"	11.44'
C23	2.50'	4.58'	S32°52'49"W	3.97'	105°01'09"	3.26'
C24	140.27'	8.29'	S31°08'34"E	8.28'	3°23'04"	4.14'
C25	9.53'	13.30'	N83°03'33"W	12.25'	79°59'19"	8.00'
C26	167.25'	8.72'	S36°06'43"E	8.72'	2°59'20"	4.36'
C27	9.50'	14.17'	N11°47'57"E	12.89'	85°28'07"	8.78'
C29	9.96'	6.98'	S83°46'44"W	6.83'	40°07'53"	3.64'
C30	1.50'	3.15'	N14°58'26"W	2.60'	120°19'41"	2.62'
C31	2.50'	3.93'	S14°47'51"W	3.54'	90°00'00"	2.50'
C32	154311.17'	9.46'	S30°12'09"E	9.46'	0°00'13"	4.73'
C37	2.50'	3.88'	N53°44'45"W	3.50'	88°52'57"	2.45'
C38	9.50'	14.29'	N33°30'26"E	12.98'	86°12'29"	8.89'
C39	9.51'	12.86'	N33°37'13"W	11.90'	77°28'58"	7.63'
C40	2.48'	4.29'	N54°09'24"E	3.77'	98°58'44"	2.91'
C41	27.50'	17.63'	S1°42'01"E	17.33'	36°44'06"	9.13'
C42	542.44'	67.49'	S20°13'53"W	67.45'	7°07'44"	33.79'
C43	27.50'	23.30'	S48°04'12"W	22.61'	48°32'54"	12.40'
C45	27.50'	12.60'	N87°14'22"W	12.49'	26°14'53"	6.41'
C46	9.50'	26.27'	N26°41'58"E	18.66'	158°31'17"	50.07'

GRAPHIC SCALE IN FEET
0 10 20 40
SCALE: 1" = 20'

AVOID HITTING UNDERGROUND TRAFFIC SIGNAL SYSTEMS AND STREET LIGHTING CONDUITS IN DESIGN
CALL BEFORE YOU DIG UNDERGROUND
Call before you UnderGround 1-702-432-5300 FREEWAY AND ARTERIAL SYSTEM OF TRANSPORTATION (FAST)
Call before you Dig Avoid cutting underground utility lines. It's costly.
CALL 811 OR 1-800-227-2600
Avoid overhead power line contact. It's costly.
Call Before You Overhead 1-702-227-2929

L18-02241 107V7656

Kimley»Horn
© 2018 KIMLEY-HORN AND ASSOCIATES, INC.
7672 LAS VEGAS BOULEVARD S., SUITE 320, LAS VEGAS, NV 89119
PHONE: 702-862-3600
WWW.KIMLEY-HORN.COM

PROFESSIONAL ENGINEER — STATE OF NEVADA — THOMAS ACKERET — Exp. 12/31/20 — CIVIL — No. 18592 — 01/25/2019

No.	REVISIONS	DATE	BY

KHA PROJECT	092954000
DATE	01/25/2019
SCALE	AS SHOWN
DESIGNED BY	CJJ
DRAWN BY	GP
CHECKED BY	TEA

HORIZONTAL CONTROL PLAN 2

RESTAURANT PAD - CENTENNIAL CENTER
CIVIL IMPROVEMENT PLANS
PREPARED FOR
KITE REALTY
CITY OF LAS VEGAS NEVADA

SHEET NUMBER
C2.1

Plotted By:Pienert, Griffin Sheet Set:Kha Layout:C2.1 January 31, 2019 09:48:16am K:\LAV_Civil\092954000-Kite Centennial Center\CAD\Plansheets\Panera - Landlord\092954000-HC.dwg
This document, together with the concepts and designs presented herein, as an instrument of service, is intended only for the specific purpose and client for which it was prepared. Reuse of and improper reliance on this document without written authorization and adaptation by Kimley-Horn and Associates, Inc. shall be without liability to Kimley-Horn and Associates, Inc.

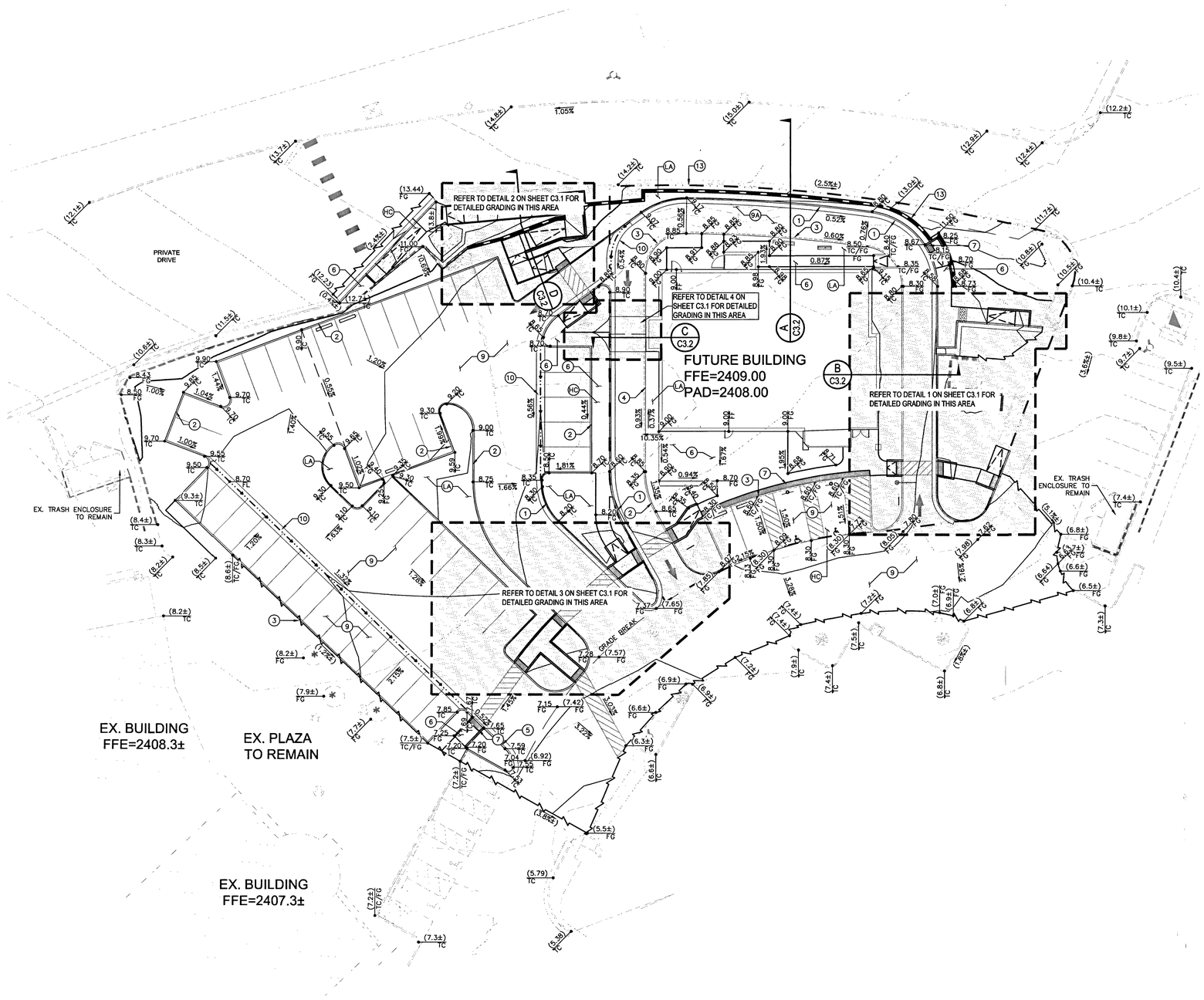

GENERAL NOTES

1. CONTRACTOR TO VERIFY EXISTING IMPROVEMENTS SHOWN ON THE PLAN.
2. CONTRACTOR TO PROTECT IN PLACE, DURING DEMOLITION AND CONSTRUCTION, ALL EXISTING IMPROVEMENTS THAT ARE TO REMAIN AS NOTED ON THE PLAN.
3. ANY EXISTING STRUCTURE, IMPROVEMENT, OR APPURTENANCE TO REMAIN THAT IS DAMAGED DURING DEMOLITION OR CONSTRUCTION SHALL BE IMMEDIATELY REPAIRED OR REPLACED BY THE CONTRACTOR AT THE CONTRACTOR'S EXPENSE.
4. CONTRACTOR SHALL VERIFY AND LOCATE ALL EXISTING UNDERGROUND UTILITIES BEFORE CONSTRUCTION AND PROTECT IN PLACE UNLESS NOTED ON THE PLANS.
5. ALL DIMENSIONS ARE MEASURED FROM BACK OF CURB UNLESS OTHERWISE NOTED ON PLANS.
6. ADD 2400 FEET TO ALL SPOT ELEVATIONS UNLESS OTHERWISE NOTED.

CONSTRUCTION NOTES

1. INSTALL TYPE 'L' CONCRETE CURB AND GUTTER PER CCAUSD No. 216.
2. INSTALL MODIFIED TYPE 'A' CONCRETE CURB PER DETAIL C ON SHEET C6.0.
3. INSTALL 0" FACE CURB PER DETAIL F ON SHEET C6.0.
4. INSTALL TRANSITION FROM TYPE 'A' CURB TO 0" FACE CURB (PER DETAIL E ON SHEET C6.0).
5. INSTALL TRANSITION FROM TYPE 'L' CURB TO MODIFIED TYPE 'L' SPILL CURB (PER DETAIL G ON SHEET C6.0).
6. INSTALL CONCRETE SIDEWALK PER CCAUSD No. 234.
7. INSTALL 2' WIDE DETECTABLE WARNING SURFACE (YELLOW) PER CCAUSD No. 235, LENGTH AS NOTED ON PLANS (OR MATCH SIDEWALK WIDTH).
9. INSTALL INSTALL ASPHALT PAVING SECTION (MATCH EXISTING).
9A. INSTALL CONCRETE PAVING PER GEOTECH REQUIREMENTS.
10. INSTALL 3' VALLEY GUTTER PER DETAIL D ON SHEET C6.0.
13. INSTALL RETAINING WALL BY OTHERS.
HC. ADA ACCESSIBLE AREA. CONTRACTOR SHALL MAINTAIN 2% CROSS SLOPE THIS AREA.
LA. LANDSCAPE AREA. REFER TO LANDSCAPE PLANS FOR DETAILS.

NOTE:
IMPROVEMENTS SHOWN WITHIN TENANT LEASE LINE ARE FOR REFERENCE ONLY

EARTHWORK QUANTITIES*

CUT FILL ANALYSIS

CUT VOLUME:	575 CY
FILL VOLUME:	700 CY
NET VOLUME:	125 CY (IMPORT)*

*BASED ON A SURFACE TO SURFACE, UNADJUSTED ANALYSIS

BASIS OF BEARING

NORTH 00°24'48" WEST, BEING THE WEST LINE OF THE NORTHEAST QUARTER (NE ¼) OF SECTION 28, TOWNSHIP 19 SOUTH, RANGE 60 EAST, M.D.M. AS SHOWN IN BOOK 95, PAGE 34 OF PLATS ON FILE AT THE CLARK COUNTY, NEVADA, RECORDER'S OFFICE.

BENCHMARK

CITY OF LAS VEGAS VERTICAL CONTROL
BENCHMARK NO. "5LV9028NE6"

MONUMENT DESCRIPTION IN THE TOP OF CURB AT THE NORTHEAST CORNER OF CENTENNIAL CENTER BOULEVARD AND TROPICAL PARKWAY (NORTHWEST CORNER OF CENTENNIAL CENTER BOULEVARD AND AZURE DRIVE).

ELEVATION = 734.784 METERS
2410.70 FEET

CITY OF LAS VEGAS VERTICAL CONTROL DATUM BASED UPON NORTH AMERICAN VERTICAL DATUM OF 1988 (NAVD '88)

NORTH

GRAPHIC SCALE IN FEET
0 10 20 40
SCALE: 1" = 20'

AVOID HITTING UNDERGROUND TRAFFIC SIGNAL SYSTEMS AND STREET LIGHT SYSTEM CONDUITS (TS CONDUIT)
CALL BEFORE YOU DIG UNDERGROUND
Call before you UnderGround
1-702-432-5300
FREEWAY AND ARTERIAL SYSTEM OF TRANSPORTATION (FAST)

Call before you Dig
Avoid cutting underground utility lines. It's costly.
CALL 811 OR 1-800-227-2600

Avoid overhead power line contact. It's costly.
Call Before You Overhead
1-702-227-2929

L18-02241 107U7656

No.	REVISIONS	DATE	BY

Kimley»Horn
© 2018 KIMLEY-HORN AND ASSOCIATES, INC.
7671 LAS VEGAS BOULEVARD S., SUITE 320, LAS VEGAS, NV 89119
PHONE: 702-862-3600
WWW.KIMLEY-HORN.COM

PROFESSIONAL ENGINEER
THOMAS ACKERET
Exp. 12/31/20
CIVIL
No. 18592
STATE OF NEVADA
01/25/2019

KHA PROJECT	092954000
DATE	01/25/2019
SCALE	AS SHOWN
DESIGNED BY	CJJ
DRAWN BY	GP
CHECKED BY	TEA

GRADING PLAN

RESTAURANT PAD - CENTENNIAL CENTER
CIVIL IMPROVEMENT PLANS
PREPARED FOR
KITE REALTY
CITY OF LAS VEGAS NEVADA

SHEET NUMBER
C3.0

Plotted By:Pienert, Griffin Sheet Set:Kha Layout:C3.0 January 31, 2019 09:48:25am K:\LAV_Civil\092954000-Kite Centennial Center\CAD\Plansheets\Panera - Landford\092954000-GD.dwg
This document, together with the concepts and designs presented herein, as an instrument of service, is intended only for the specific purpose and client for which it was prepared. Reuse of and improper reliance on this document without written authorization and adaptation by Kimley-Horn and Associates, Inc. shall be without liability to Kimley-Horn and Associates, Inc.

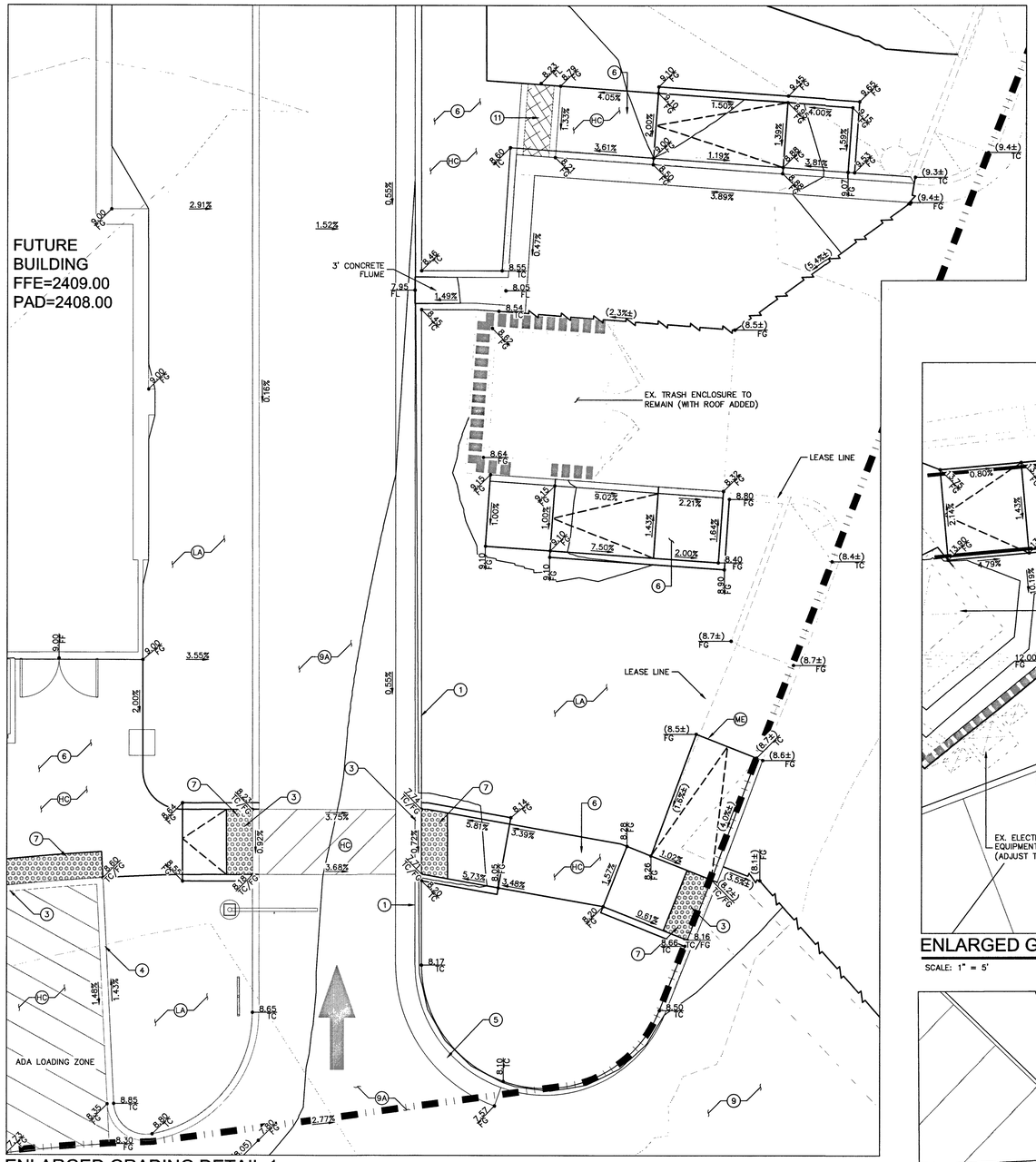

ENLARGED GRADING DETAIL 1

SCALE: 1" = 5'

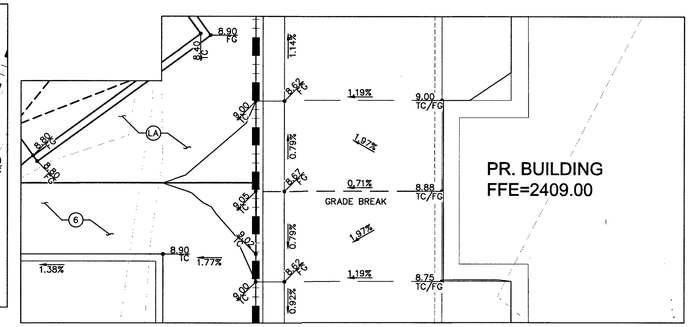

ENLARGED GRADING DETAIL 4

SCALE: 1" = 5'

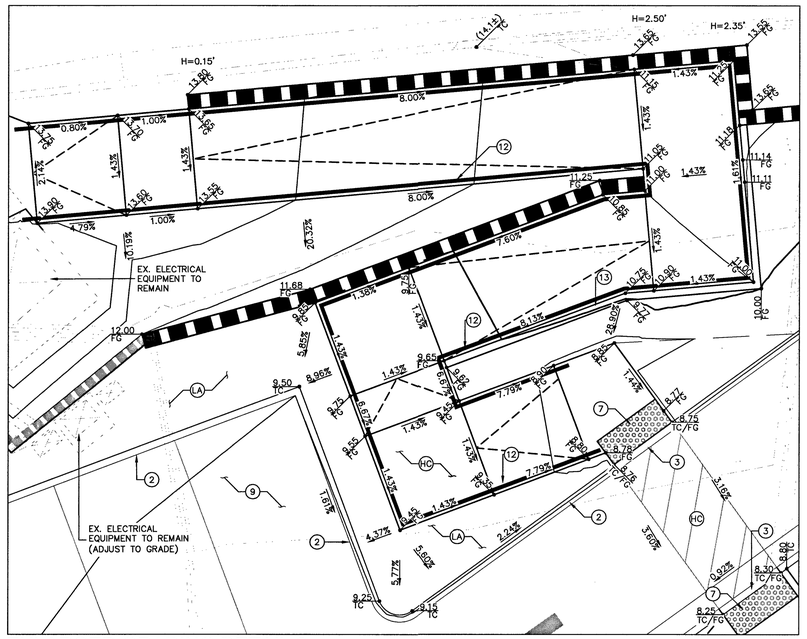

ENLARGED GRADING DETAIL 2

SCALE: 1" = 5'

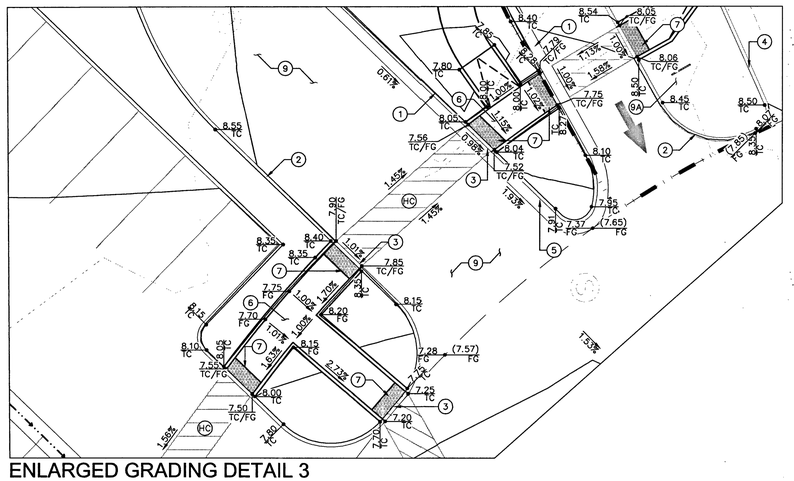

ENLARGED GRADING DETAIL 3

SCALE: 1" = 10'

GENERAL NOTES

1. CONTRACTOR TO VERIFY EXISTING IMPROVEMENTS SHOWN ON THE PLAN.
2. CONTRACTOR TO PROTECT IN PLACE, DURING DEMOLITION AND CONSTRUCTION, ALL EXISTING IMPROVEMENTS THAT ARE TO REMAIN AS NOTED ON THE PLAN.
3. ANY EXISTING STRUCTURE, IMPROVEMENT, OR APPURTENANCE TO REMAIN THAT IS DAMAGED DURING DEMOLITION OR CONSTRUCTION SHALL BE IMMEDIATELY REPAIRED OR REPLACED BY THE CONTRACTOR AT THE CONTRACTOR'S EXPENSE.
4. CONTRACTOR SHALL VERIFY AND LOCATE ALL EXISTING UNDERGROUND UTILITIES BEFORE CONSTRUCTION AND PROTECT IN PLACE UNLESS NOTED ON THE PLANS.
5. ALL DIMENSIONS ARE MEASURED FROM BACK OF CURB UNLESS OTHERWISE NOTED ON PLANS.

CONSTRUCTION NOTES

1. INSTALL TYPE 'L' CONCRETE CURB AND GUTTER PER CCAUSD No. 216.
2. INSTALL MODIFIED TYPE 'A' CONCRETE CURB PER DETAIL C ON SHEET C6.0.
3. INSTALL 0" FACE CURB PER DETAIL F ON SHEET C6.0.
4. INSTALL TRANSITION FROM TYPE 'A' CURB TO 0" FACE CURB (PER DETAIL E ON SHEET C6.0).
5. INSTALL TRANSITION FROM TYPE 'L' CURB TO MODIFIED TYPE 'L' SPILL CURB (PER DETAIL G ON SHEET C6.0).
6. INSTALL CONCRETE SIDEWALK PER CCAUSD No. 234.
7. INSTALL 2' WIDE DETECTABLE WARNING SURFACE (YELLOW) PER CCAUSD No. 235, LENGTH AS NOTED ON PLANS (OR MATCH SIDEWALK WIDTH).
9. INSTALL INSTALL ASPHALT PAVING SECTION (MATCH EXISTING).
9A. INSTALL CONCRETE PAVING PER GEOTECH REQUIREMENTS.
11. INSTALL SIDEWALK UNDERDRAIN PER CCAUSD No. 236.
12. INSTALL HANDRAIL PER ARCHITECTURAL PLANS.
13. INSTALL RETAINING WALL BY OTHERS.
HC. ADA ACCESSIBLE AREA. CONTRACTOR SHALL MAINTAIN 2% CROSS SLOPE THIS AREA.
LA. LANDSCAPE AREA. REFER TO LANDSCAPE PLANS FOR DETAILS.
ME. MATCH EXISTING.

NOTE:
IMPROVEMENTS SHOWN WITHIN TENANT LEASE LINE ARE FOR REFERENCE ONLY

BASIS OF BEARING

NORTH 00°24'48" WEST, BEING THE WEST LINE OF THE NORTHEAST QUARTER (NE ¼) OF SECTION 28, TOWNSHIP 19 SOUTH, RANGE 60 EAST, M.D.M. AS SHOWN IN BOOK 95, PAGE 34 OF PLATS ON FILE AT THE CLARK COUNTY, NEVADA, RECORDER'S OFFICE.

BENCHMARK

CITY OF LAS VEGAS VERTICAL CONTROL
BENCHMARK NO. "5LV9028NE6"

MONUMENT DESCRIPTION IN THE TOP OF CURB AT THE NORTHEAST CORNER OF CENTENNIAL CENTER BOULEVARD AND TROPICAL PARKWAY (NORTHWEST CORNER OF CENTENNIAL CENTER BOULEVARD AND AZURE DRIVE).

ELEVATION = 734.784 METERS
2410.70 FEET

CITY OF LAS VEGAS VERTICAL CONTROL DATUM BASED UPON NORTH AMERICAN VERTICAL DATUM OF 1988 (NAVD '88)

NORTH

AVOID HITTING UNDERGROUND TRAFFIC SIGNAL, LIGHTING AND STREET LIGHT SYSTEM CONDUITS IT'S COSTLY
CALL BEFORE YOU DO UNDERGROUND
Call before you UnderGround
1-702-432-5300
FREEWAY AND ARTERIAL SYSTEM OF TRANSPORTATION (FAST)

Call before you Dig
Avoid cutting underground utility lines. It's costly.
CALL 811 OR
1-800-227-2600

Avoid overhead power line contact. It's costly.
Call Before You Overhead
1-702-227-2929

L18-02241 10707656

No.	REVISIONS	DATE	BY

Kimley»Horn
© 2018 KIMLEY-HORN AND ASSOCIATES, INC.
6671 LAS VEGAS BOULEVARD S., SUITE 320, LAS VEGAS, NV 89119
PHONE: 702-862-3600
WWW.KIMLEY-HORN.COM

PROFESSIONAL ENGINEER
THOMAS E. ACKERET
Exp. 12/31/20
CIVIL
No. 18592
STATE OF NEVADA
01/25/2019

KHA PROJECT	092954000
DATE	01/25/2019
SCALE	AS SHOWN
DESIGNED BY	CJJ
DRAWN BY	GP
CHECKED BY	TEA

GRADING PLAN

RESTAURANT PAD -
CENTENNIAL CENTER
CIVIL IMPROVEMENT PLANS
PREPARED FOR
KITE REALTY
CITY OF LAS VEGAS NEVADA

SHEET NUMBER
C3.1

Plotted By:Pienert, Griffin Sheet Set:Kha Layout:C3.1 January 31, 2019 09:48:28am K:\LAV_Civil\092954000-Kite Centennial Center\CAD\Plansheets\Panera - Landlord\092954000-GD.dwg
This document, together with the concepts and designs presented herein, as an instrument of service, is intended only for the specific purpose and client for which it was prepared. Reuse of and improper reliance on this document without written authorization and adaptation by Kimley-Horn and Associates, Inc. shall be without liability to Kimley-Horn and Associates, Inc.

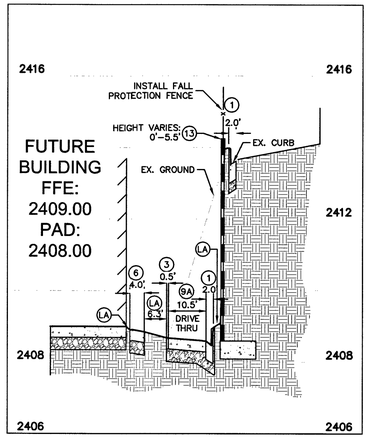

A C3.0 SECTION A
SCALE: 1" = 20'

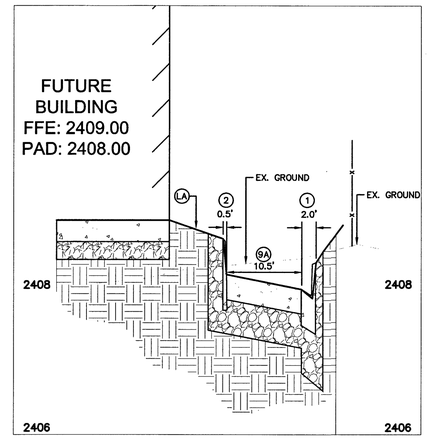

B C3.0 SECTION B
SCALE: 1" = 10'

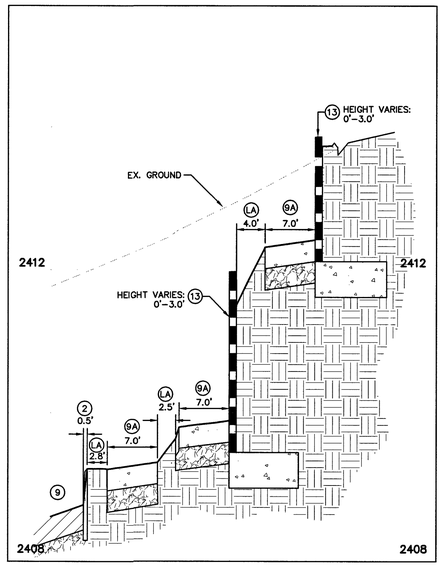

D C3.0 SECTION D
SCALE: 1" = 10'

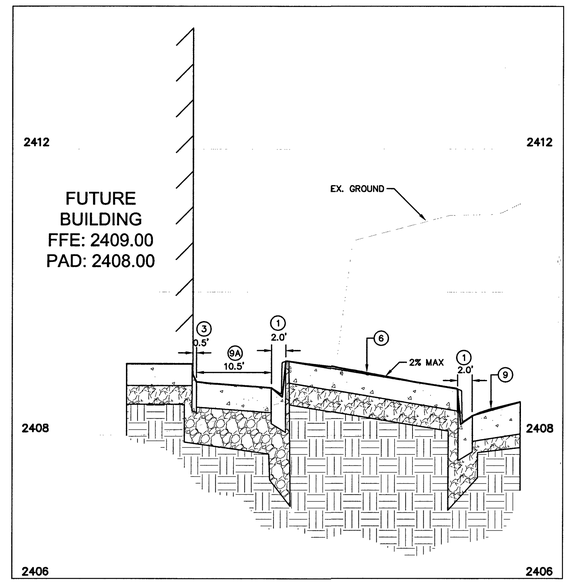

C C3.0 SECTION C
SCALE: 1" = 10'

GENERAL NOTES

1. CONTRACTOR TO VERIFY EXISTING IMPROVEMENTS SHOWN ON THE PLAN.
2. CONTRACTOR TO PROTECT IN PLACE, DURING DEMOLITION AND CONSTRUCTION, ALL EXISTING IMPROVEMENTS THAT ARE TO REMAIN AS NOTED ON THE PLAN.
3. ANY EXISTING STRUCTURE, IMPROVEMENT, OR APPURTENANCE TO REMAIN THAT IS DAMAGED DURING DEMOLITION OR CONSTRUCTION SHALL BE IMMEDIATELY REPAIRED OR REPLACED BY THE CONTRACTOR AT THE CONTRACTOR'S EXPENSE.
4. CONTRACTOR SHALL VERIFY AND LOCATE ALL EXISTING UNDERGROUND UTILITIES BEFORE CONSTRUCTION AND PROTECT IN PLACE UNLESS NOTED ON THE PLANS.
5. ALL DIMENSIONS ARE MEASURED FROM BACK OF CURB UNLESS OTHERWISE NOTED ON PLANS.

CONSTRUCTION NOTES

1. INSTALL TYPE 'L' CONCRETE CURB AND GUTTER PER CCAUSD No. 216.
2. INSTALL MODIFIED TYPE 'A' CONCRETE CURB PER DETAIL C ON SHEET C6.0.
3. INSTALL 0" FACE CURB PER DETAIL F ON SHEET C6.0.
6. INSTALL CONCRETE SIDEWALK PER CCAUSD No. 234.
9. INSTALL INSTALL ASPHALT PAVING SECTION (MATCH EXISTING).
9A. INSTALL CONCRETE PAVING PER GEOTECH REQUIREMENTS.
13. INSTALL RETAINING WALL BY OTHERS.
LA. LANDSCAPE AREA. REFER TO LANDSCAPE PLANS FOR DETAILS.

BASIS OF BEARING

NORTH 00°24'48" WEST, BEING THE WEST LINE OF THE NORTHEAST QUARTER (NE ¼) OF SECTION 28, TOWNSHIP 19 SOUTH, RANGE 60 EAST, M.D.M. AS SHOWN IN BOOK 95, PAGE 34 OF PLATS ON FILE AT THE CLARK COUNTY, NEVADA, RECORDER'S OFFICE.

BENCHMARK

CITY OF LAS VEGAS VERTICAL CONTROL
BENCHMARK NO. "5LV9028NE6"

MONUMENT DESCRIPTION IN THE TOP OF CURB AT THE NORTHEAST CORNER OF CENTENNIAL CENTER BOULEVARD AND TROPICAL PARKWAY (NORTHWEST CORNER OF CENTENNIAL CENTER BOULEVARD AND AZURE DRIVE).

ELEVATION = 734.784 METERS
2410.70 FEET

CITY OF LAS VEGAS VERTICAL CONTROL DATUM BASED UPON NORTH AMERICAN VERTICAL DATUM OF 1988 (NAVD '88)

AVOID HITTING UNDERGROUND TRAFFIC SIGNAL SYSTEMS AND STREET LIGHTING SYSTEM CONDUITS
CALL BEFORE YOU DO UNDERGROUND
Call before you UnderGround
1-702-432-5300
FREEWAY AND ARTERIAL SYSTEM OF TRANSPORTATION (FAST)

Call before you Dig
Avoid cutting underground utility lines. It's costly.
CALL 811 OR 1-800-227-2600

Avoid overhead power line contact. It's costly.
Call Before You Overhead
1-702-227-2929

L18-02241 10717656

No.	REVISIONS	DATE	BY

Kimley»Horn
© 2018 KIMLEY-HORN AND ASSOCIATES, INC.
5671 LAS VEGAS BOULEVARD S., SUITE 320, LAS VEGAS, NV 89119
PHONE: 702-862-3600
WWW.KIMLEY-HORN.COM

PROFESSIONAL ENGINEER
THOMAS ACKERET
Exp. 12/31/20
CIVIL
No. 18592
STATE OF NEVADA
01/25/2019

KHA PROJECT 092954000
DATE 01/25/2019
SCALE AS SHOWN
DESIGNED BY CJJ
DRAWN BY GP
CHECKED BY TEA

GRADING SECTIONS

RESTAURANT PAD - CENTENNIAL CENTER
CIVIL IMPROVEMENT PLANS
PREPARED FOR
KITE REALTY
CITY OF LAS VEGAS NEVADA

SHEET NUMBER
C3.2

Plotted By:Plenert, Griffin Sheet Set:Kha Layout:Sections January 31, 2019 09:48:37am K:\LAV_Civil\092954000-Kite Centennial Center\CAD\Plansheets\Panera - Landford\092954000-GD-Sections.dwg
This document, together with the concepts and designs presented herein, as an instrument of service, is intended only for the specific purpose and client for which it was prepared. Reuse of and improper reliance on this document without written authorization and adaptation by Kimley-Horn and Associates, Inc. shall be without liability to Kimley-Horn and Associates, Inc.

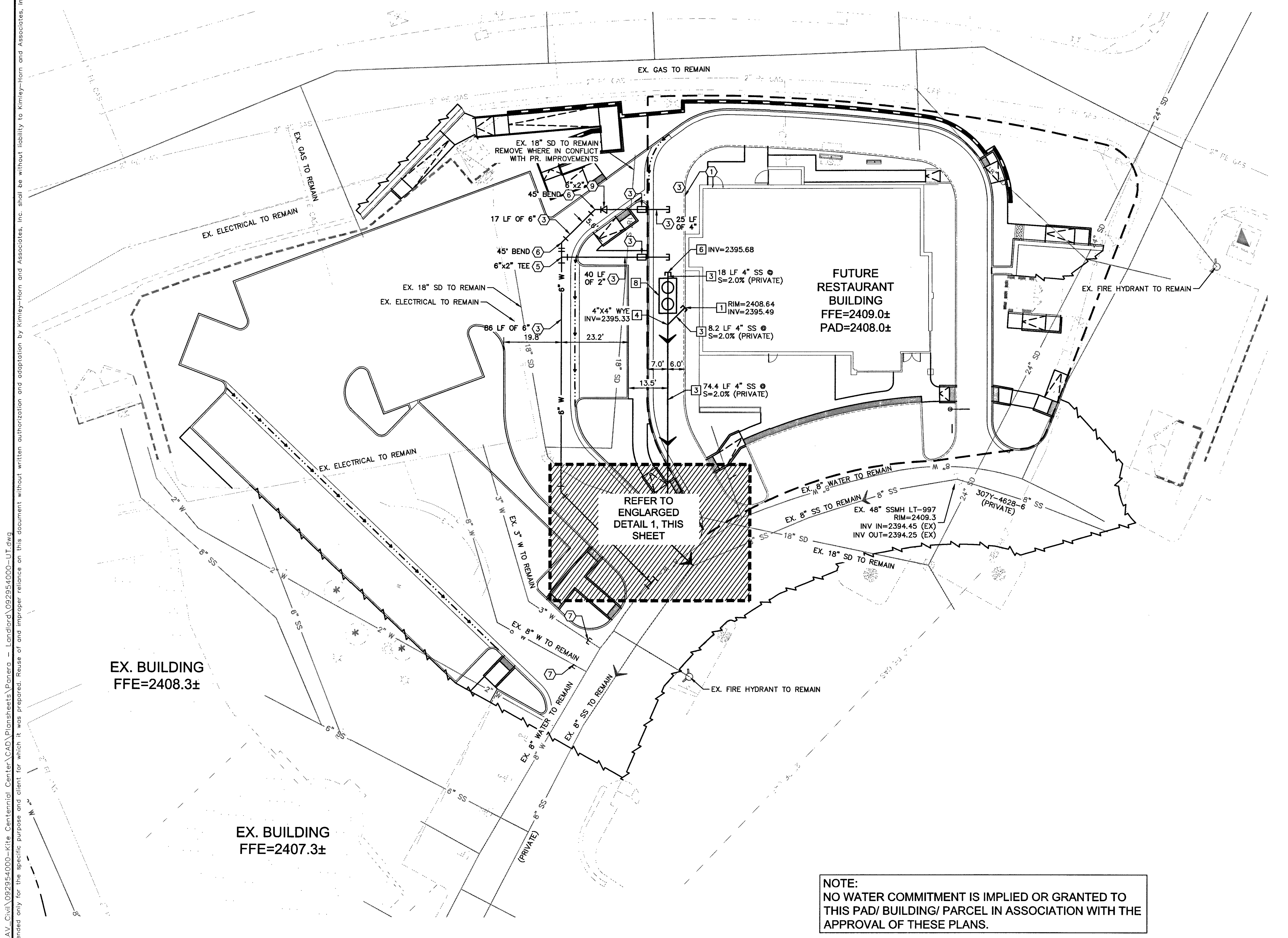

NOTE: ALL ABOVE GROUND UTILITY APPURTENANCES SHALL CONFORM TO THE REQUIREMENTS OF TITLE 19.06 & 08

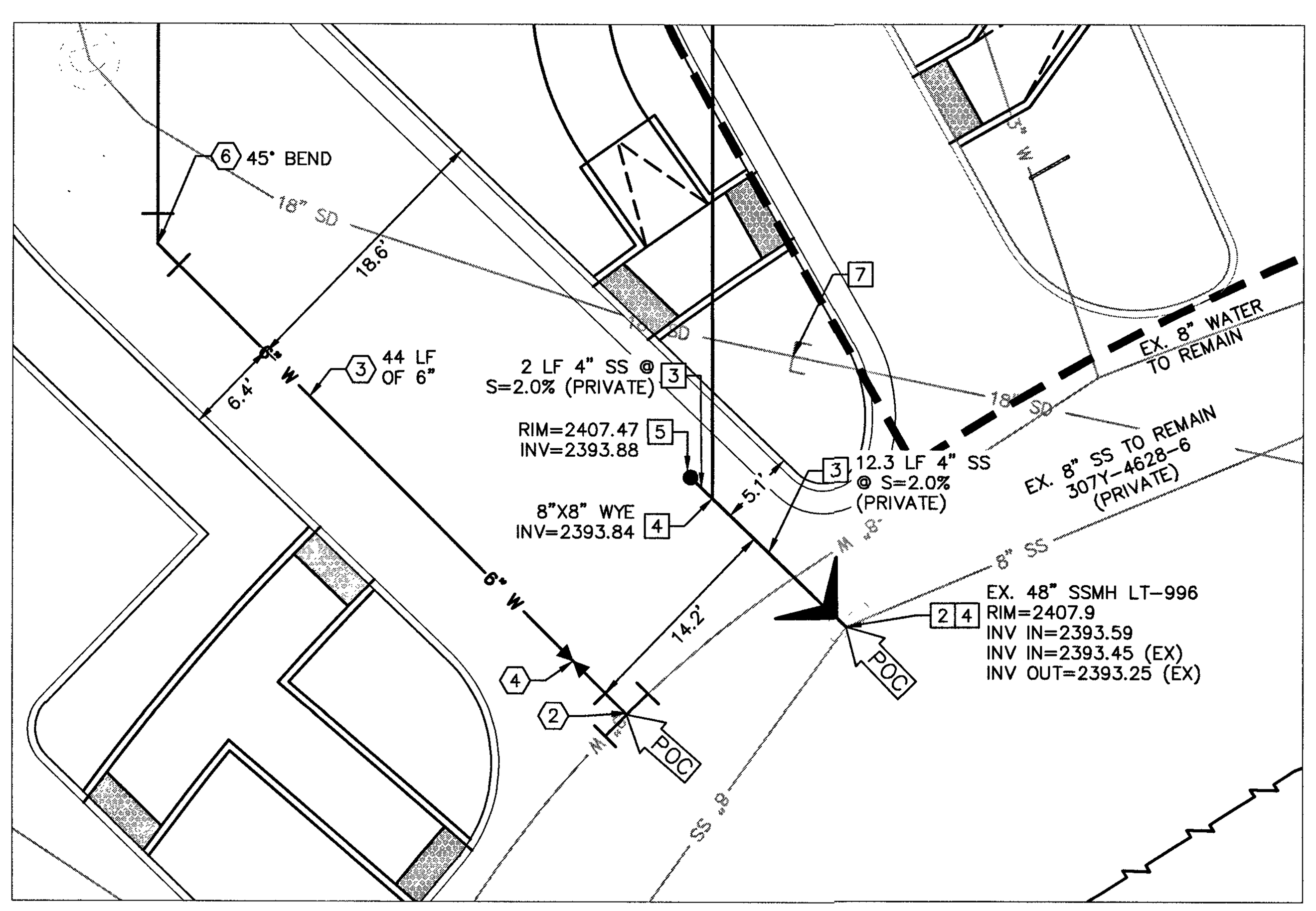

ENLARGED DETAIL 1

SCALE: 1" = 10'

GENERAL NOTES

1. ALL EXISTING UTILITY LOCATIONS SHOWN HEREON ARE APPROXIMATE ONLY. IT SHALL BE THE CONTRACTOR'S RESPONSIBILITY TO DETERMINE THE EXACT VERTICAL AND HORIZONTAL LOCATION OF ALL EXISTING UNDERGROUND UTILITIES PRIOR TO COMMENCING CONSTRUCTION. NO REPRESENTATION IS MADE THAT ALL UTILITIES ARE SHOWN HEREON. THE ENGINEER ASSUMES NO RESPONSIBILITY FOR UTILITIES NOT SHOWN OR UTILITIES NOT SHOWN IN THEIR PROPER LOCATION.
2. CONTRACTOR TO FIELD VERIFY EXISTING INVERT ELEVATION PRIOR TO CONSTRUCTION AND NOTIFY THE ENGINEER OF ANY DISCREPANCIES.
3. ALL WATER LINE CONSTRUCTION SHALL BE IN ACCORDANCE WITH "UNIFORM DESIGN AND CONSTRUCTION STANDARDS FOR POTABLE WATER SYSTEMS – 3RD EDITION" (UDACS) WHERE APPLICABLE.
4. ALL ABOVE GROUND UTILITY APPURTENANCES SHALL BE ADJUSTED TO MATCH FINISHED GRADE ELEVATIONS.

UTILITY NOTES

⟨1⟩ WATER POINT OF CONNECTION. REFER TO MEP PLANS FOR CONTINUATION. INSTALL TWO-WAY CLEANOUT PER DETAIL K ON SHEET C6.0

⟨2⟩ WET TAP EXISTING 8" PVC WATER LINE WITH 8"X2" TAPPING SLEEVE AND 2" TAPPING VALVE PER UDACS SECTION 3.15.

⟨3⟩ INSTALL SCHEDULE 40 PVC WATER LINE PER UDACS PLATE No. 17, LENGTH AND SIZE AS NOTED ON PLAN.

⟨4⟩ INSTALL GATE VALVE PER UDACS PLATE No. 39, SIZE PER PIPE.

⟨6⟩ INSTALL PVC HORIZONTAL BEND WITH THRUST BLOCKS PER UDACS PLATE No. 31, SIZE AND BEND AS NOTED ON PLAN.

⟨7⟩ CUT AND CAP EXISTING WATER LINE PER UDACS 2.11.07-C.

SEWER NOTES

[1] SEWER POINT OF CONNECTION. REFER TO MEP PLANS FOR CONTINUATION.

[2] CONNECT TO EXISTING SANITARY SEWER LATERAL.

[3] INSTALL 4" SDR-35 PVC SANITARY SEWER WITH TRENCH AND BACKFILL PER DCSWCS SD-15.

[4] INSTALL PVC FITTING, SIZE AND TYPE AS NOTED ON PLAN.

[5] INSTALL CLEANOUT PER DCSWCS SD-26, TRAFFIC RATE LID.

[6] STUB & CAP WITH CLEANOUT FOR FUTURE EXTENSION BY TENANT.

[7] CUT AND CAP EXISTING STORM DRAIN LINE PER DCSWCS 3.18.1.

[8] CONCEPTUAL GREASE INTERCEPTOR LOCATION (FINAL LOCATION & DESIGN WILL BE PROVIDED BY BUILDING PLUMBING ENGINEER).

COMMERCIAL SUBDIVISION SEWER NOTE:
ON-SITE SEWERS ARE A COMMON ELEMENT OF THE COMMERCIAL SUBDIVISION WHICH IS PRIVATELY OWNED AND WHICH IS MAINTAINED IN ACCORDANCE WITH COVENANTS, CONDITIONS AND RESTRICTIONS THAT GOVERN THE SUBDIVISION.

NOTE:
FUTURE BUILDING SHOWN FOR REFERENCE ONLY. NO PROPOSED UTILITY CONNECTIONS INCLUDED WITH THIS PROJECT. TENANT BUILDING PLANS (BY-OTHER) WILL PROVIDE UTILITY FLOWS/DEMAND

BENCHMARK

CITY OF LAS VEGAS VERTICAL CONTROL
BENCHMARK NO. "5LV9028NE6"

MONUMENT DESCRIPTION IN THE TOP OF CURB AT THE NORTHEAST CORNER OF CENTENNIAL CENTER BOULEVARD AND TROPICAL PARKWAY (NORTHWEST CORNER OF CENTENNIAL CENTER BOULEVARD AND AZURE DRIVE).

ELEVATION = 734,784 METERS
2410.70 FEET

CITY OF LAS VEGAS VERTICAL CONTROL DATUM BASED UPON NORTH AMERICAN VERTICAL DATUM OF 1988 (NAVD '88)

BASIS OF BEARING

NORTH 00°24'48" WEST, BEING THE WEST LINE OF THE NORTHEAST QUARTER (NE ¼) OF SECTION 28, TOWNSHIP 19 SOUTH, RANGE 60 EAST, M.D.M. AS SHOWN IN BOOK 95, PAGE 34 OF PLATS ON FILE AT THE CLARK COUNTY, NEVADA, RECORDER'S OFFICE.

NOTE:
NO WATER COMMITMENT IS IMPLIED OR GRANTED TO THIS PAD/ BUILDING/ PARCEL IN ASSOCIATION WITH THE APPROVAL OF THESE PLANS.

ESTIMATED FIRE FLOW CALCULATIONS

*CALCULATIONS ARE ESTIMATED FOR THE FUTURE BUILDING PAD. THIS PROJECT IS FOR PARKING LOT EXPANSION AND PAD PREPARATION ONLY

FIRE FLOW REQUIREMENT IS 1,500 GPM @ 20 PSI RESIDUAL.

TOTAL BUILDING AREA (SQ. FT.)*	5,480
LARGEST AREA BETWEEN 4-HOUR AREA SEPARATION FIRE WALLS (SQ. FT.)	N/A
BUILDING HEIGHT (FT.)*	22'-0"
NUMBER OF STORIES	1
OCCUPANCY*	A-2
TYPE OF CONSTRUCTION*	V-A
FULL AUTOMATIC FIRE SPRINKLER (YES/NO)*	NO
ANTICIPATED FIRE SPRINKLER FLOW DEMAND (GPM)*	0

EXTEND SERVICE LATERALS 2" AND SMALLER (2) 2"

WATER METERS IN FINISHED ROADWAYS SHALL BE RELOCATED TO BACK OF CURB, AND SHALL BE INSTALLED PER UDACS PLATE No. 2 OR 4. ALL SERVICE LATERALS 2" AND SMALLER MAY BE EXTENDED PROVIDED THE FOLLOWING CRITERIA ARE MET:

- LATERAL CAN ONLY BE EXTENDED IF CONNECTING TO COPPER.
- LATERAL MUST BE INSTALLED AT 90° TO THE MAIN.
- AN EXISTING SERVICE LATERAL THAT IS NOT COPPER IS TO BE ABANDONED FROM EXISTING WATER MAIN, AND REPLACED WITH A COPPER SERVICE LATERAL PER UDACS PLATE No. 4. IF THE CORPORATION STOP IS DAMAGED BEYOND REPAIR OR PULLED FROM THE EXISTING WATER MAIN, THE MAIN SHALL BE REPAIRED AT THE CONTRACTORS EXPENSE IN A MANNER APPROVED BY THE LVVWD. IF THE CORPORATION STOP IS NOT WATER TIGHT, THE CONTRACTOR SHALL NOTIFY THE LVVWD COMMUNICATION SUPPORT CENTER (702-258-7171) FOR FURTHER DIRECTION.

REDUCED PRESSURE PRINCIPLE ASSEMBLY RPPA (1) 2"

APPROVED REDUCED PRESSURE PRINCIPLE ASSEMBLY(S) SHALL BE INSTALLED PER THE UDACS PLATE No. 8. NO WATER SHALL BE TAKEN FROM A SERVICE REQUIRING BACKFLOW PREVENTION UNTIL THE REDUCED PRESSURE PRINCIPLE ASSEMBLY HAS BEEN SUCCESSFULLY TESTED BY THE LVVWD. ANY BLOCK WALL OR OTHER FENCE MATERIAL SHALL BE DESIGNED AND CONSTRUCTED AROUND THE OUTSIDE OF THE EASEMENT(S) TO ALLOW THE DISTRICT DIRECT ACCESS FROM THE ADJACENT RIGHT-OF-WAY. EASEMENTS SHALL BE CLEARLY MARKED OR STAKED PRIOR TO THE START OF CONSTRUCTION.

LVVWD APPROVAL

APPROVED FOR CONSTRUCTION

LAS VEGAS VALLEY WATER DISTRICT ENGINEERING SERVICES

PROJECT No. 136266 FIRST APPROVED DATE: 2-4-19

LAS VEGAS FIRE AND RESCUE DATE 2/14/19

L18-02241 107V7656

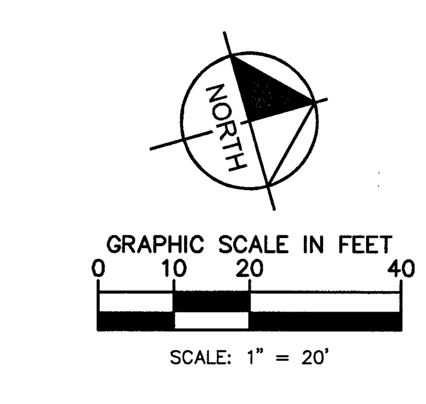

Call before you Dig. Avoid cutting underground utility lines. It's costly.
CALL BEFORE YOU DO UNDERGROUND. Call before you UnderGround 1-702-432-5300
CALL 811 OR 1-800-227-2600
Avoid overhead power line contact. It's costly. Call Before You Overhead 1-702-227-2929

No.	REVISIONS	DATE	BY

Kimley»Horn
© 2019 KIMLEY-HORN AND ASSOCIATES, INC.
6671 LAS VEGAS BOULEVARD S., SUITE 320, LAS VEGAS, NV 89119
PHONE: 702-862-3600
WWW.KIMLEY-HORN.COM

PROFESSIONAL ENGINEER – STATE OF NEVADA – THOMAS ACKERET – Exp. 12/31/20 – CIVIL – No. 18592
01/25/2019

KHA PROJECT	092954000
DATE	01/25/2019
SCALE	AS SHOWN
DESIGNED BY	CJJ
DRAWN BY	GP
CHECKED BY	TEA

UTILITY PLAN

RESTAURANT PAD - CENTENNIAL CENTER
CIVIL IMPROVEMENT PLANS
PREPARED FOR
KITE REALTY
CITY OF LAS VEGAS NEVADA

PROJ#:136266A QS:125-28-NE

SHEET NUMBER
C4.0

Plotted By: Plenert, Griffin Sheet Set: Kha Layout: C3.0 January 31, 2019 09:48:53am K:\LAV_Civil\092954000-Kite Centennial Center\CAD\Plansheets\Panera - Landlord\092954000-SM.dwg
This document, together with the concepts and designs presented herein, as an instrument of service, is intended only for the specific purpose and client for which it was prepared. Reuse of and improper reliance on this document without written authorization and adaptation by Kimley-Horn and Associates, Inc. shall be without liability to Kimley-Horn and Associates, Inc.

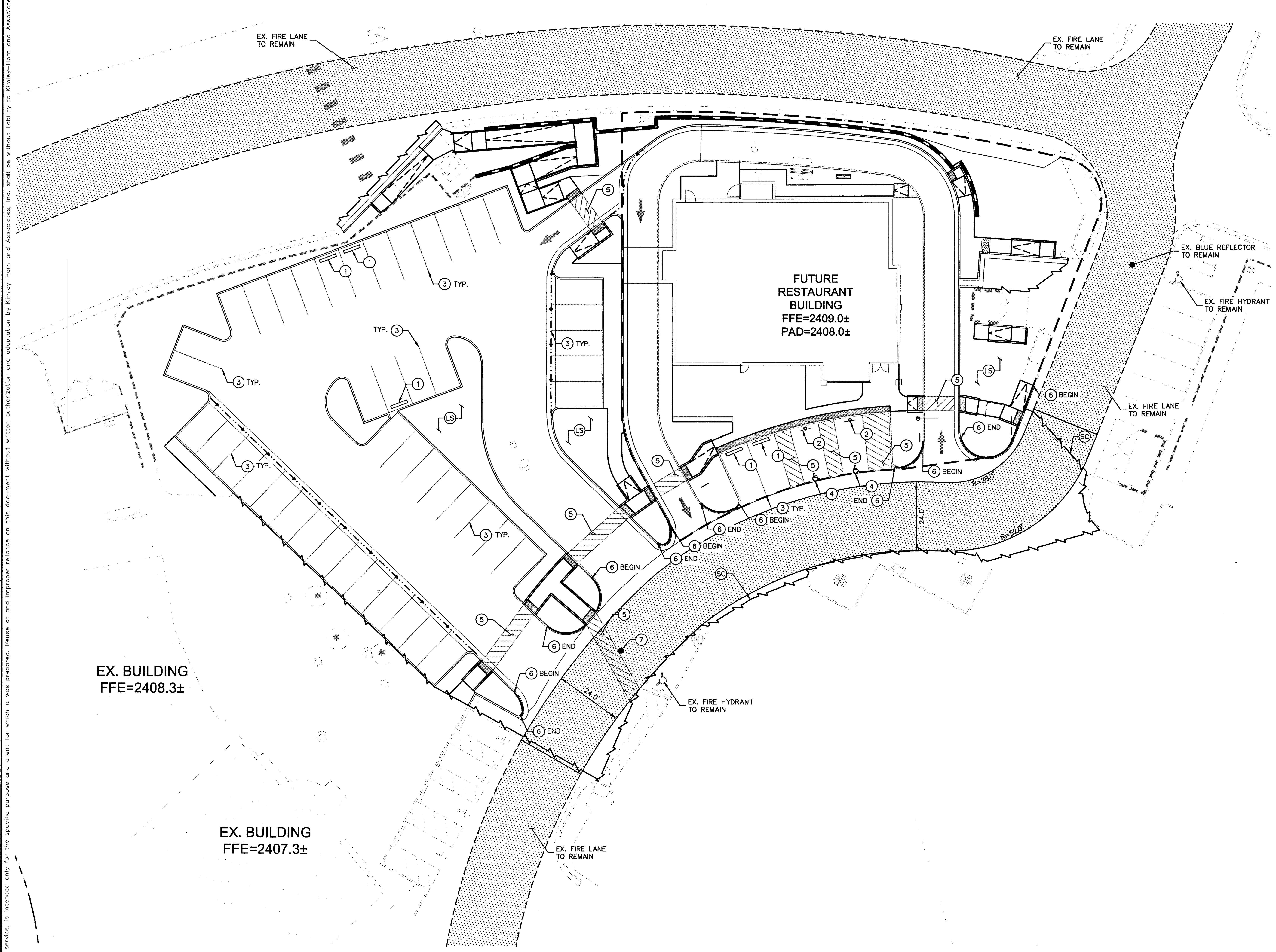

GENERAL NOTES

1. CONTRACTOR TO VERIFY EXISTING IMPROVEMENTS SHOWN ON THE PLAN.
2. CONTRACTOR TO PROTECT IN PLACE, DURING DEMOLITION AND CONSTRUCTION, ALL EXISTING IMPROVEMENTS THAT ARE TO REMAIN AS NOTED ON THE PLAN.
3. ANY EXISTING STRUCTURE, IMPROVEMENT, OR APPURTENANCE TO REMAIN THAT IS DAMAGED DURING DEMOLITION OR CONSTRUCTION SHALL BE IMMEDIATELY REPAIRED OR REPLACED BY THE CONTRACTOR AT THE CONTRACTOR'S EXPENSE.
4. CONTRACTOR SHALL VERIFY AND LOCATE ALL EXISTING UNDERGROUND UTILITIES BEFORE CONSTRUCTION AND PROTECT IN PLACE UNLESS NOTED ON THE PLANS.
5. ALL DIMENSIONS ARE MEASURED FROM BACK OF CURB UNLESS OTHERWISE NOTED ON PLANS.

STRIPING AND MARKING NOTES

(1) INSTALL JENSEN PRECAST BUMPER BLOCK MODEL S-72 PER DETAIL J ON SHEET C6.0, OR APPROVED EQUAL.
(2) INSTALL ADA SIGN AND POST PER DETAIL A ON SHEET C6.0 AND CCAUSD 249.1.
(3) INSTALL 4" SOLID WHITE LINE (WHITE ACRYLIC PAINT).
(4) INSTALL ADA PAVEMENT LEGEND (WHITE PAINT) PER DETAIL B ON SHEET C6.0.
(5) INSTALL ADA LOADING ZONE/CROSSING (WHITE PAINT) PER DETAIL I ON SHEET C6.0.
(6) INSTALL RED PAINTED CURB AND STENCIL "NO PARKING FIRE LANE" IN WHITE LETTERING PER CITY OF LAS VEGAS FIRE DEPARTMENT STANDARDS AND SPECIFICATIONS.
(7) INSTALL FIRE HYDRANT LOCATOR (RAISED BLUE REFLECTOR) CENTERED ON OUTER MOST LANE.
(LS) LANDSCAPE AREA
(SC) SAWCUT MATCH EXISTING

FIRE NOTES / LEGEND

FIRE TRUCK ACCESS ROUTE

R=52'
24' TYP
R=28'
MINIMUM FIRE TURNING TEMPLATE

NOTE:
IMPROVEMENTS SHOWN WITHIN TENANT LEASE LINE ARE FOR REFERENCE ONLY

BASIS OF BEARING

NORTH 00°24'48" WEST, BEING THE WEST LINE OF THE NORTHEAST QUARTER (NE ¼) OF SECTION 28, TOWNSHIP 19 SOUTH, RANGE 60 EAST, M.D.M. AS SHOWN IN BOOK 95, PAGE 34 OF PLATS ON FILE AT THE CLARK COUNTY, NEVADA, RECORDER'S OFFICE.

BENCHMARK

CITY OF LAS VEGAS VERTICAL CONTROL
BENCHMARK NO. "5LV9028NE6"

MONUMENT DESCRIPTION IN THE TOP OF CURB AT THE NORTHEAST CORNER OF CENTENNIAL CENTER BOULEVARD AND TROPICAL PARKWAY (NORTHWEST CORNER OF CENTENNIAL CENTER BOULEVARD AND AZURE DRIVE).

ELEVATION = 734,784 METERS
2410.70 FEET

CITY OF LAS VEGAS VERTICAL CONTROL DATUM BASED UPON NORTH AMERICAN VERTICAL DATUM OF 1988 (NAVD '88)

GRAPHIC SCALE IN FEET
0 10 20 40

NORTH

SCALE: 1" = 20'

Call before you Dig
Avoid cutting underground utility lines. It's costly.
CALL BEFORE YOU DO UNDERGROUND
Call before you UnderGround
1-702-432-5300
CALL 811 OR 1-800-227-2600
Avoid overhead power line contact. It's costly.
Call Before You Overhead
1-702-227-2929

LAS VEGAS FIRE AND RESCUE   2/14/19 DATE

L18-02241 107V7656

No.	REVISIONS	DATE	BY

Kimley»Horn
© 2018 KIMLEY-HORN AND ASSOCIATES, INC.
6671 LAS VEGAS BOULEVARD S., SUITE 320, LAS VEGAS, NV 89119
PHONE: 702-862-3600
WWW.KIMLEY-HORN.COM

PROFESSIONAL ENGINEER
THOMAS ACKERET
Exp. 12/31/20
CIVIL
No. 18592
STATE OF NEVADA
01/25/2019

KHA PROJECT 092954000
DATE 01/25/2019
SCALE AS SHOWN
DESIGNED BY CJJ
DRAWN BY GP
CHECKED BY TEA

STRIPING PLAN

RESTAURANT PAD - CENTENNIAL CENTER
CIVIL IMPROVEMENT PLANS
PREPARED FOR
KITE REALTY
CITY OF LAS VEGAS   NEVADA

SHEET NUMBER
C5.0

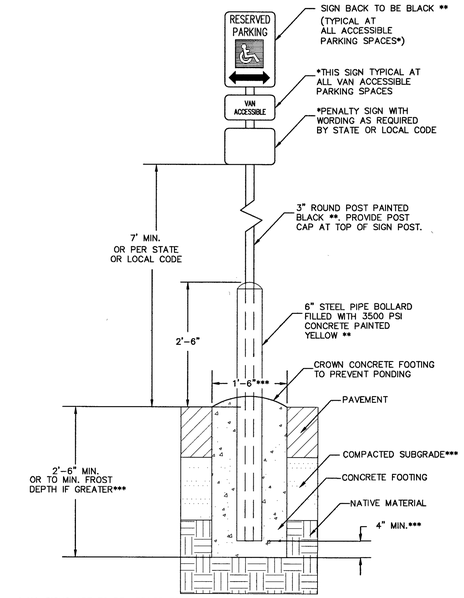

* ALL SIGNS ARE TO BE AFFIXED TO POST WITH RUST RESISTANT HARDWARE.
** SATIN FINISH, ACRYLIC POLYURETHANE ENAMEL OR: TO CONFORM TO ARCHITECTURAL DESIGN CRITERIA FOR A SPECIFIC PROJECT OR PROPERTY.
*** OR: PER GEOTECHNICAL REPORT OR STRUCTURAL ENGINEERING RECOMMENDATIONS.

A ACCESSIBLE PARKING SIGN ASSEMBLY WITH BOLLARD DETAIL

NTS

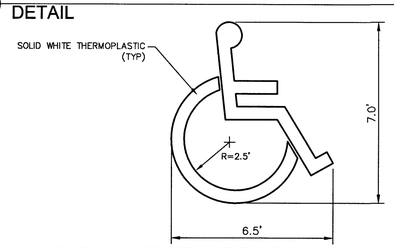

B ADA PARKING DESIGNATION SYMBOL DETAIL

NTS

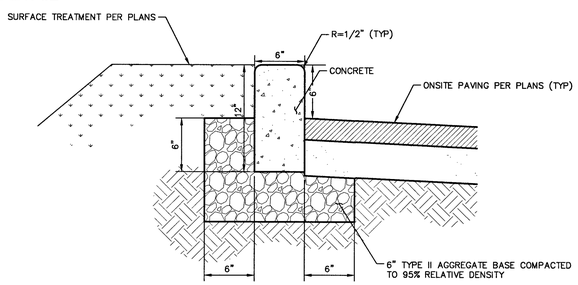

C MODIFIED TYPE "A" CURB DETAIL

NTS

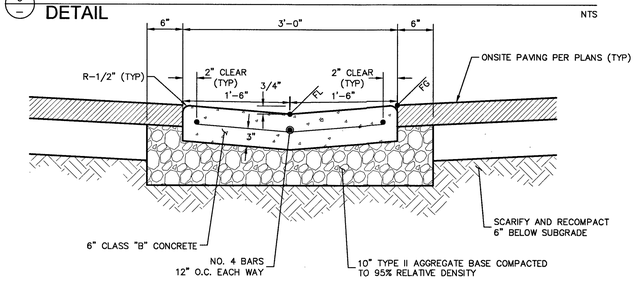

D ONSITE 3' VALLEY GUTTER DETAIL

NTS

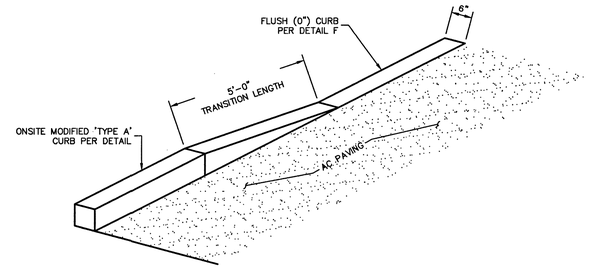

E MODIFIED 'TYPE A' CURB TRANSITION TO FLUSH (0") CURB DETAIL

NTS

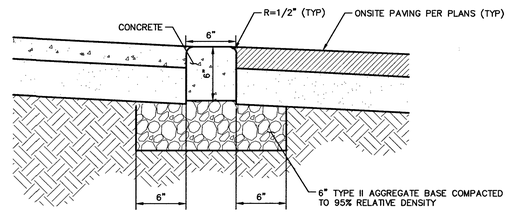

F FLUSH (0") CURB DETAIL

NTS

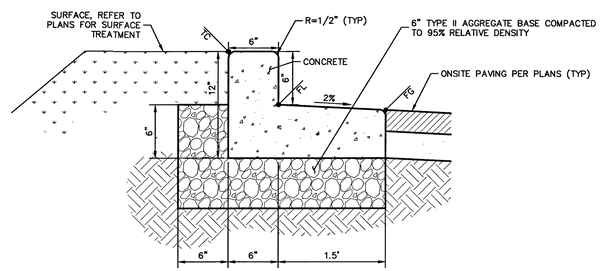

G ONSITE MODIFIED TYPE "L" SPILL CURB DETAIL

NTS

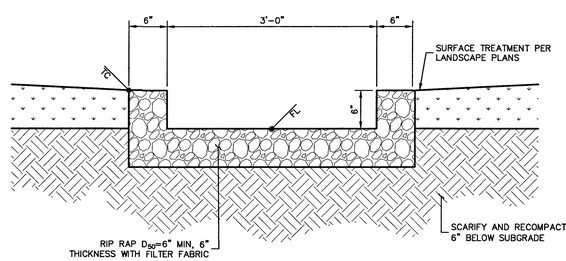

H 3' WIDE RECTANGULAR RIP-RAP DRAINAGE SWALE DETAIL

NTS

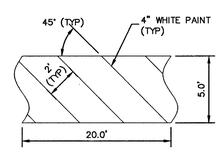

I ADA ACCESSIBLE PARKING DETAIL

NTS

STANDARD PARKING CURBS

WHEEL STOP OR PARKING BUMPERS
MODELS S-72

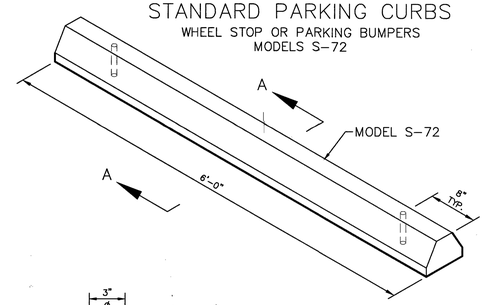

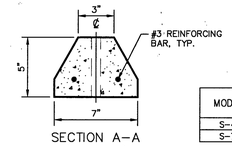

SECTION A-A
(TYPICAL)

FOR COMPLETE DESIGN AND PRODUCT INFORMATION, CONTACT JENSEN PRECAST.

"OUR MOST POPULAR MODEL PARKING CURBS"

MODEL	LENGTH	WEIGHT	WT. PER PALLET	No. PER PALLET
S-48	4'-0"	124 LBS.	3810 LBS.	* 36
S-72	6'-0"	186 LBS.	3900 LBS.	* 24

* SAVE ON PALLET QUANTITIES

J STANDARD PARKING CURB DETAIL

NTS

11/9/00
Standard_Parking_Curb.dwg
© 2000 Jensen Precast

JENSEN PRECAST

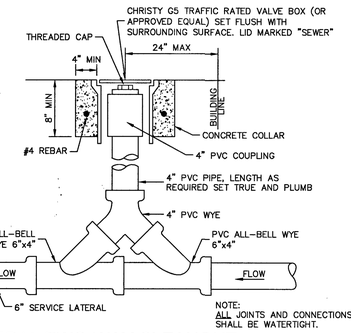

K SEWER LATERAL TWO-WAY CLEANOUT DETAIL

NTS

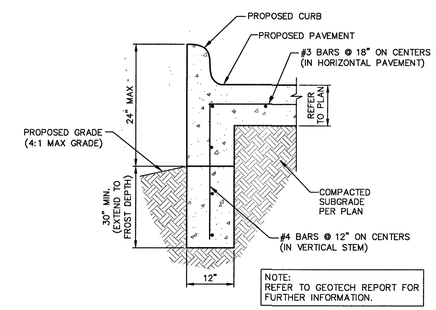

L CURB WALL DETAIL

NTS

AVOID HITTING UNDERGROUND TRAFFIC SIGNAL SYSTEMS AND STREET LIGHT SYSTEM CONDUITS. IT'S COSTLY!
CALL BEFORE YOU DO UNDERGROUND
Call before you UnderGround
1-702-432-5300
FREEWAY AND ARTERIAL SYSTEM OF TRANSPORTATION (FAST)

Call before you Dig
Avoid cutting underground utility lines. It's costly.
CALL 811 OR
1-800-227-2600

Avoid overhead power line contact. It's costly.
Call Before You Overhead
1-702-227-2929

L18-02241 10707656

No.	REVISIONS	DATE	BY

Kimley»Horn
© 2018 KIMLEY-HORN AND ASSOCIATES, INC.
8871 LAS VEGAS BOULEVARD S., SUITE 320, LAS VEGAS, NV 89119
PHONE: 702-862-3600
WWW.KIMLEY-HORN.COM

PROFESSIONAL ENGINEER — THOMAS ACKEBET — Exp. 12/31/20 — CIVIL — No. 18592 — STATE OF NEVADA
01/25/2019

KHA PROJECT	092954000
DATE	01/25/2019
SCALE	AS SHOWN
DESIGNED BY	CJJ
DRAWN BY	GP
CHECKED BY	TEA

DETAILS

RESTAURANT PAD - CENTENNIAL CENTER
CIVIL IMPROVEMENT PLANS
PREPARED FOR
KITE REALTY
CITY OF LAS VEGAS — NEVADA

SHEET NUMBER
C6.0

Plotted By:Pienert, Griffin Sheet Set:Kha Layout:C6.0 January 31, 2019 09:48:59am K:\LAV_Civil\092954000-Kite Centennial Center\CAD\Plansheets\Ponero - Landlord\092954000-DT.dwg
This document, together with the concepts and designs presented herein, as an instrument of service, is intended only for the specific purpose and client for which it was prepared. Reuse of and improper reliance on this document without written authorization and adaptation by Kimley-Horn and Associates, Inc. shall be without liability to Kimley-Horn and Associates, Inc.