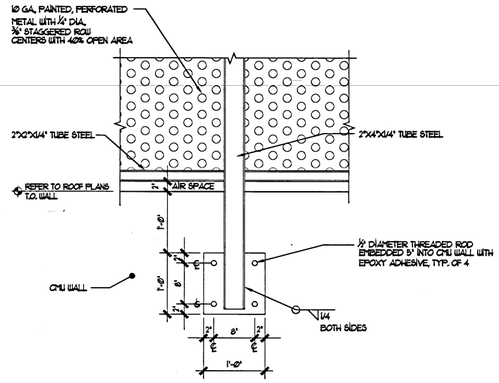

ELEVATION DETAIL OF TUBE STEEL AT SCREEN (6 / A7.07)

SCALE: 1" = 1'-0"

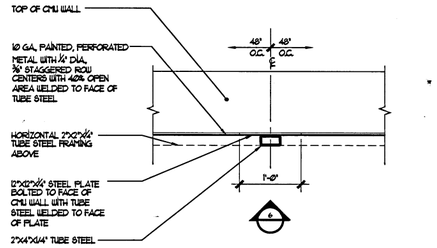

PLAN DETAIL OF SCREEN (5 / A7.07)

SCALE: 1" = 1'-0"

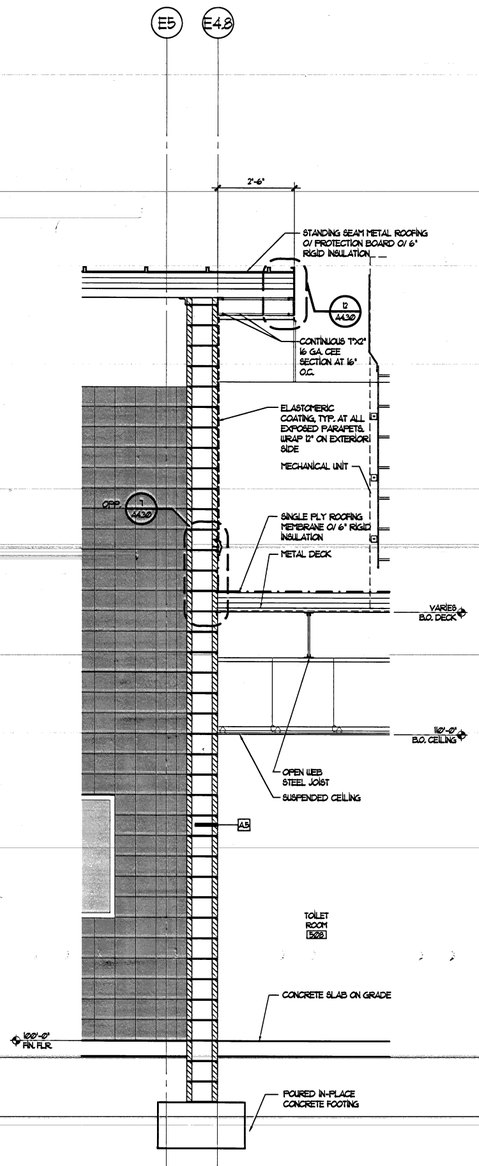

WALL SECTION (4 / A7.07)

SCALE: 1/2" = 1'-0"

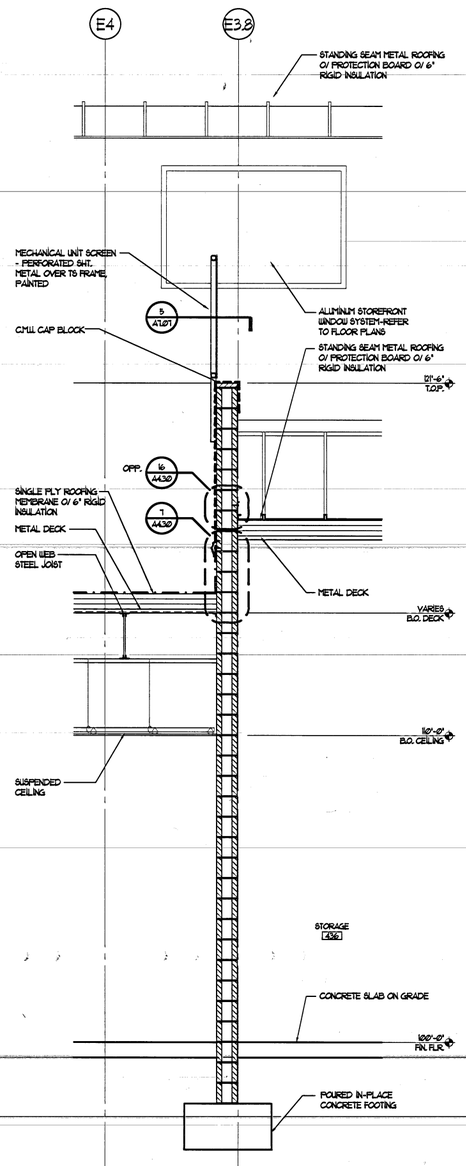

WALL SECTION (3 / A7.07)

SCALE: 1/2" = 1'-0"

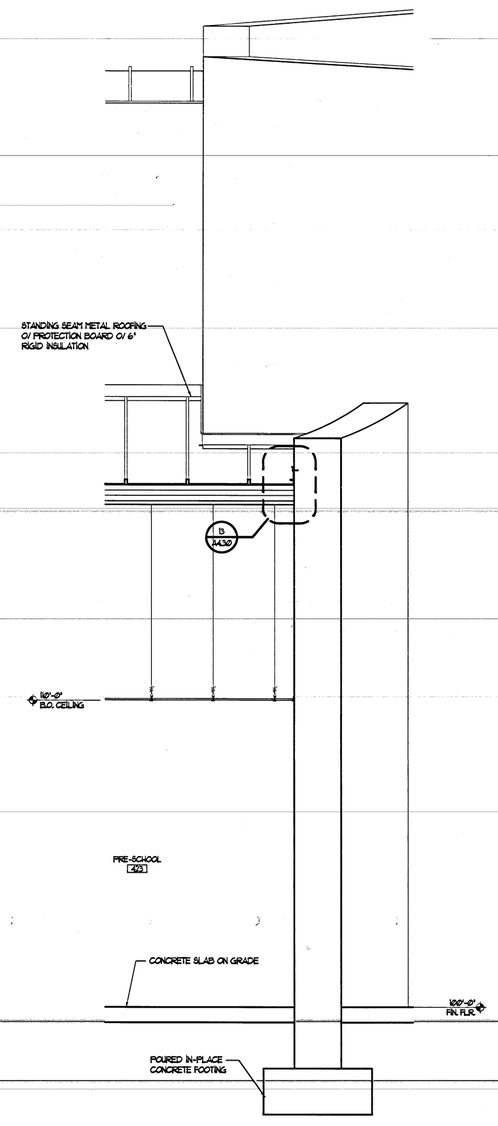

WALL SECTION (2 / A7.07)

SCALE: 1/2" = 1'-0"

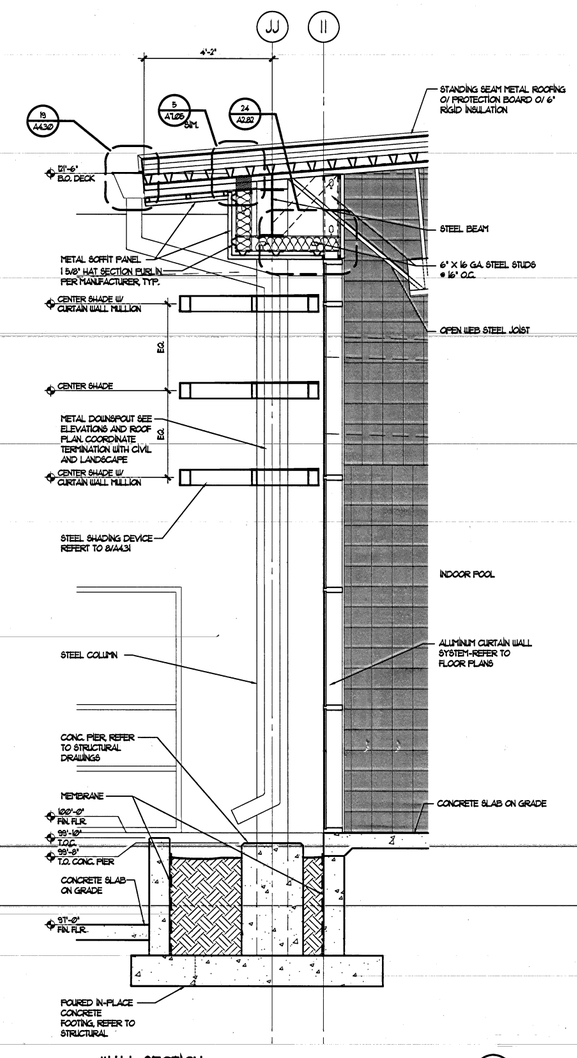

WALL SECTION (1 / A7.07)

SCALE: 1/2" = 1'-0"

123456

07731-A7.07.DWG - 4 Nov 2005 - 5:01 PM

184-A7.07.TIF

REVISIONS
RECORD DRAWINGS 10/05/07

CONSULTANT

LUCCHESI •GALATI• ARCHITECTS
500 TRUST KOAD, SUITE A
LAS VEGAS, NEVADA 89119
(702) 263-2111
(702) 262-5811 FAX

Disclaimer: These record drawings prepared by Lucchesi Galati Architects, Inc., are based on information provided by others. Lucchesi Galati Architects, Inc. has not verified the accuracy and/or completeness of the information supplied by others, and shall not be responsible for any errors or omissions, which may be incorporated herein as a result.

CITY OF LAS VEGAS
CENTENNIAL HILLS COMMUNITY CENTER
RECORD DRAWINGS
WALL SECTIONS

STAMP

OWNER: CITY OF LAS VEGAS
DEPARTMENT OF PUBLIC WORKS
ARCHITECTURAL SERVICES

400 EAST STEWART AVENUE
LAS VEGAS, NEVADA 89101
PHONE: (702) 229-6535
FAX: (702) 384-8846
TDD: (702) 386-9108

DRAWN	LGA
FILE	0207-03-001
DATE	03/08/05
SCALE	AS NOTED
BID NO	05153410.01
CLV DWG NO	6711-49
SHT NO	A7.07

DRAWINGS AS INSTRUMENTS OF SERVICE ARE THE PROPERTY OF THE CLARK PROFESSIONAL WHOSE STAMP OF CERTIFICATION APPEARS ON THE DRAWINGS AND SPECIFICATIONS. ANY USE OR REPRODUCTION IN WHOLE OR IN PART WITHOUT WRITTEN CONSENT IS STRICTLY PROHIBITED. COPIES OF THE DRAWINGS AND SPECIFICATIONS RETAINED BY THE CLIENT MAY BE UTILIZED ONLY FOR RECEIPTING THE PROJECT FOR WHICH THEY WERE PREPARED AND NOT FOR THE CONSTRUCTION OF ANY OTHER PROJECT. N. A. C. 623.190