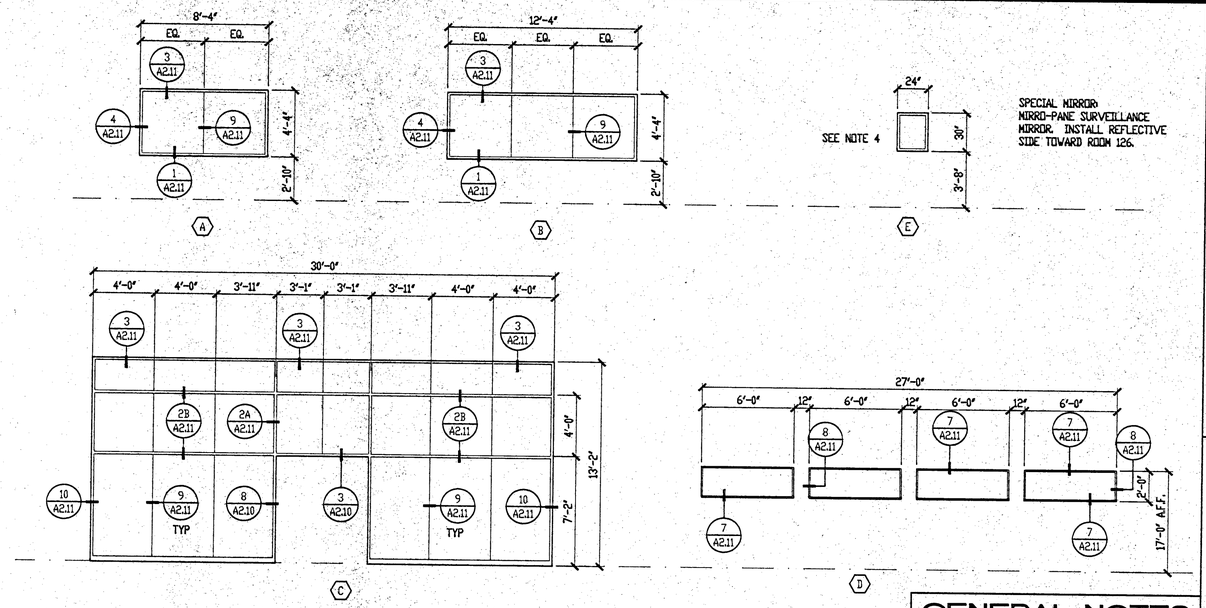

WINDOW TYPES

SCALE: 1/4"=1'-0"

GENERAL NOTES

1 VERIFY ALL DIMENSIONS IN FIELD PRIOR TO FABRICATION

2 ALL STOREFRONT TO BE CLEAR ANODIZED ALUMINUM FRAME

3 PROVIDE KAWNEER TRI-FAB 451 ALUMINUM FRAME SYSTEM OR APPROVED EQUAL AT WINDOW TYPES B,C AND D

4 PROVIDE KAWNEER ALUMINUM FRAME ISOGLAZE CAN SYSTEM OR APPROVED EQUAL AT WINDOW TYPE D & E

5 PROVIDE KAWNEER TRI-FAB 450 ALUMINUM FRAME SYSTEM OR APPROVED EQUAL AT WINDOW TYPE A

6 GLASS TYPE: 1" INSULATED GLASS (SEE SPECS) UNLESS NOTED OTHERWISE

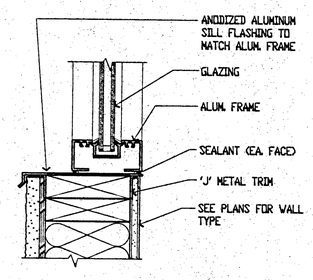

WINDOW SILL 1
SCALE: 3"=1'-0"

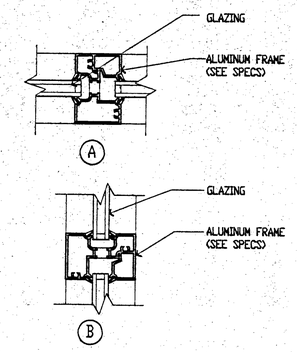

WINDOW MULLION 2
SCALE: 3"=1'-0"

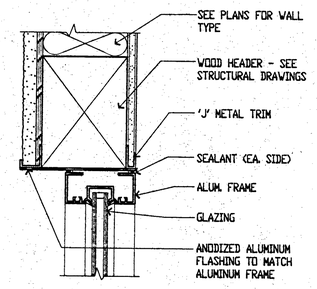

WINDOW HEAD 3
SCALE: 3"=1'-0"

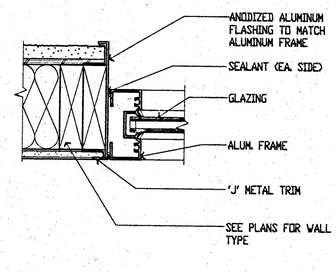

WINDOW JAMB 4
SCALE: 3"=1'-0"

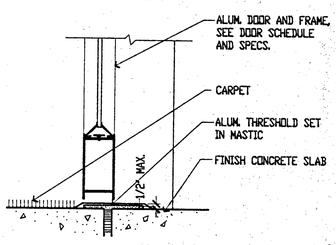

THRESHOLD DETAIL 5
SCALE: 3"=1'-0"

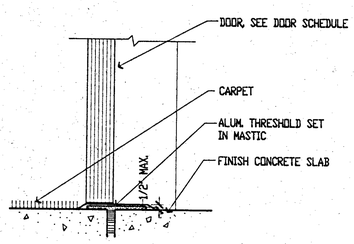

THRESHOLD DETAIL 6
SCALE: 3"=1'-0"

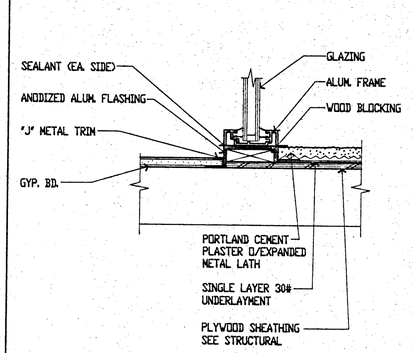

WINDOW SILL (HEAD SIM.) 7
SCALE: 3"=1'-0"

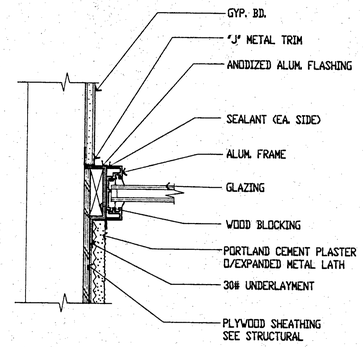

WINDOW JAMB 8
SCALE: 3"=1'-0"

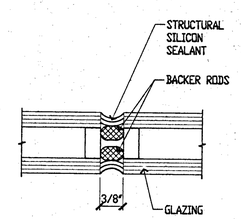

GLAZING DETAIL 9
SCALE: FULL SCALE

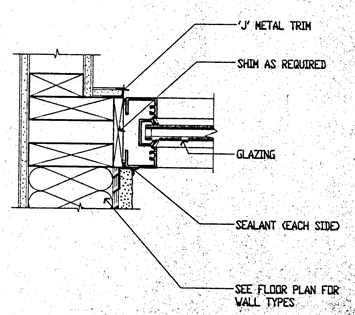

WINDOW JAMB 10
SCALE: 3"=1'-0"

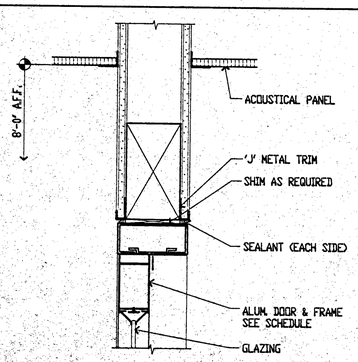

WINDOW HEAD 11
SCALE: 3"=1'-0"

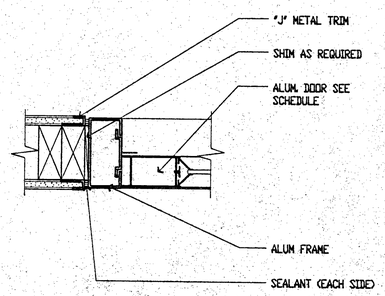

JAMB DETAIL 12
SCALE: 3"=1'-0"

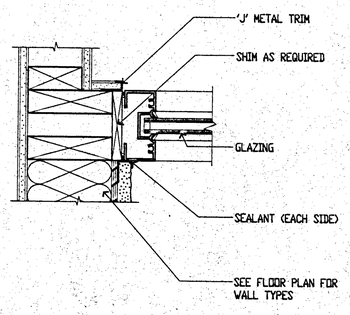

WINDOW JAMB 13
SCALE: 3"=1'-0"

PLANS APPROVED
CONSTRUCTION
Building & Safety Dept.
City of Las Vegas, Nevada
BY FEB 06 1992
Does Not Include Electrical, Plumbing or Mechanical
Approval Of Plans - 1994
Plumbing - Mechanical

REVISIONS

REV	DESCRIPTION	DAT

© DOMINGO CAMBEIRO CORPORATION 1990

All designs, arrangements and plans indicated or presented by this drawing, as instruments of service, are owned by and the property of DOMINGO CAMBEIRO CORPORATION. The use of these plans and/or specifications shall be restricted to the original site for which they were prepared and publication thereof is expressly limited to such use. Reproduction, publication or re-use by any method, in whole or in part is prohibited. None of such designs, arrangements or plans shall be used by or disclosed to any person, firm, agency or corporation without the written permission of DOMINGO CAMBEIRO CORPORATION. Visual contact with these plans and specifications shall constitute prima facie evidence of acceptance of these restrictions.

SEAL: DOMINGO CAMBEIRO REGISTERED 631 ARCHITECT STATE OF NEVADA

DRAWN BY
CHECKED BY
ISSUED DATE 1-21-92

WINDOW TYPES AND DETAILS

DO NOT SCALE DRAWINGS

ADMINISTRATION BUILDING
DETENTION FACILITY EXPANSION
CITY OF LAS VEGAS, NEVADA

Domingo Cambeiro Corporation
ARCHITECTURE · ENGINEERING · PLANNING · INTERIORS
3555 PECOS-McLEOD IC. LAS VEGAS, NEVADA 89121 (702) 792-0084

SHEET NO.
A2.11