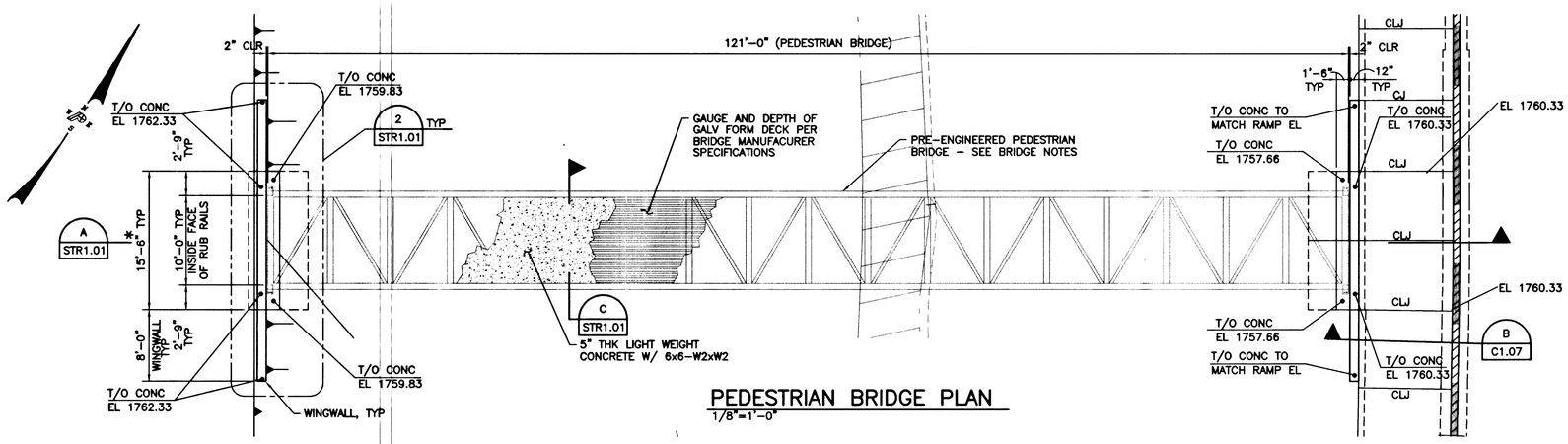

PEDESTRIAN BRIDGE PLAN
1/8"=1'-0"

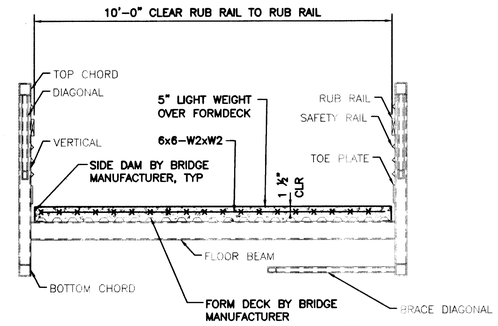

SECTION
NTS
C
STR1.01

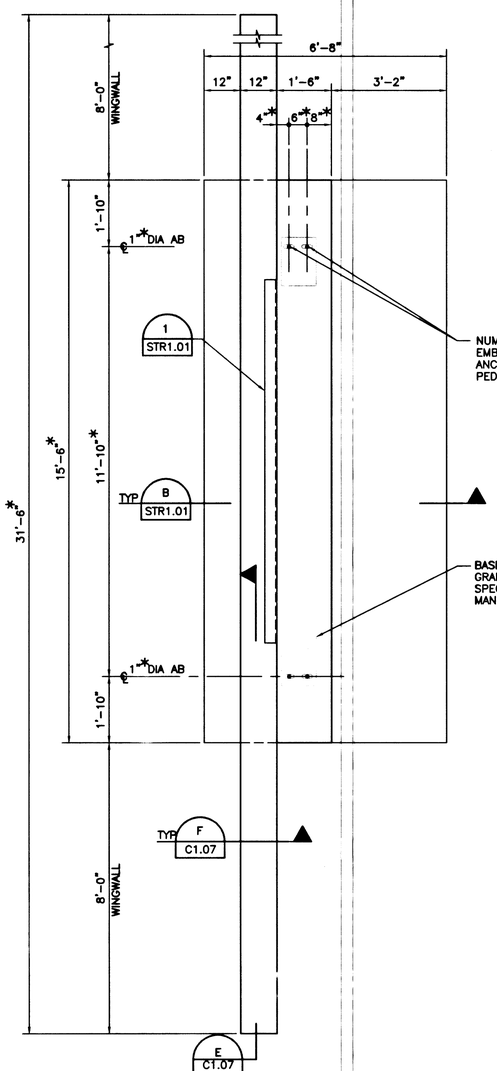

ABUTMENT PLAN
1/2"=1'-0"
2
STR1.01

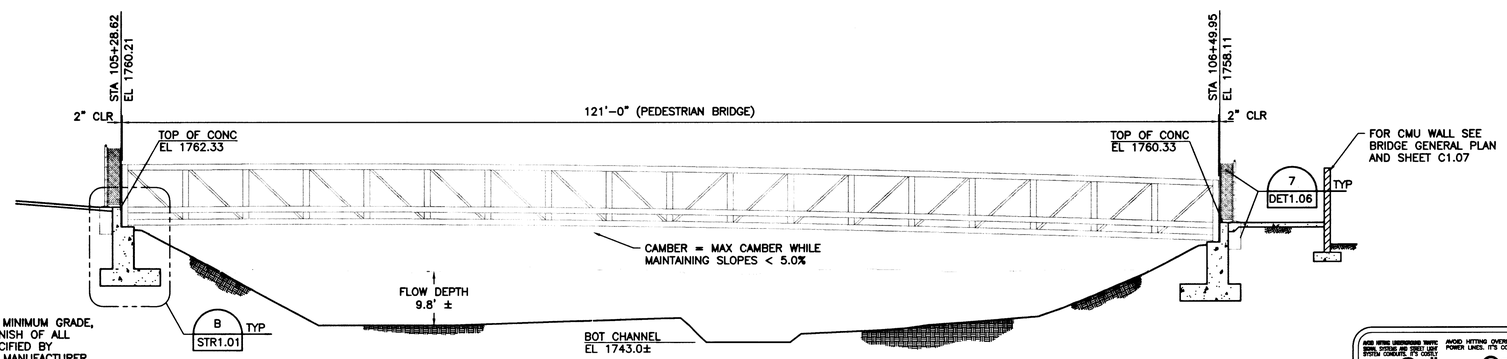

PEDESTRIAN BRIDGE SECTION
1/8"=1'-0"
A
STR1.01

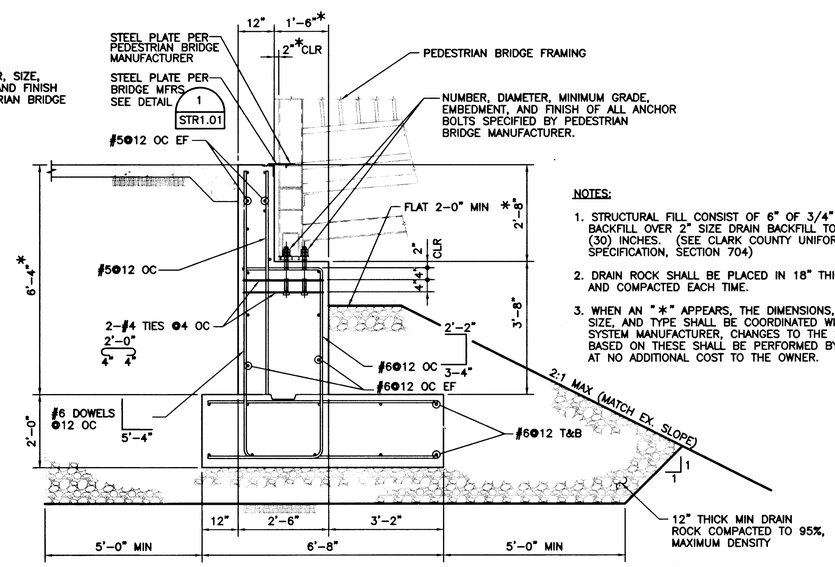

SECTION
1/2"=1'-0"
B
STR1.01

NOTES:

1. STRUCTURAL FILL CONSIST OF 6" OF 3/4" SIZE DRAIN BACKFILL OVER 2" SIZE DRAIN BACKFILL TO DEPTH OF (30) INCHES. (SEE CLARK COUNTY UNIFORM STANDARD SPECIFICATION, SECTION 704)
2. DRAIN ROCK SHALL BE PLACED IN 18" THICK LIFTS AND COMPACTED EACH TIME.
3. WHEN AN "*" APPEARS, THE DIMENSIONS, ELEVATIONS, SIZE, AND TYPE SHALL BE COORDINATED WITH BRIDGE SYSTEM MANUFACTURER, CHANGES TO THE STRUCTURE BASED ON THESE SHALL BE PERFORMED BY CONTRACTOR AT NO ADDITIONAL COST TO THE OWNER.

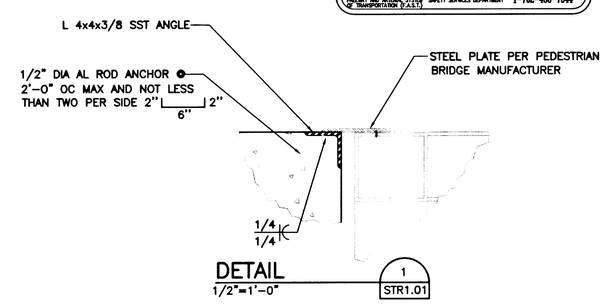

DETAIL
1/2"=1'-0"
1
STR1.01

BRIDGE NOTES

PRIOR TO CONSTRUCTION, CONTRACTOR MUST VERIFY ALL ELEVATIONS SHOWN.

THE BRIDGE ABUTMENT DESIGN IS BASED ON CONTINENTAL BRIDGE. SEE BELOW FOR MORE INFORMATION REGARDING EQUIVALENT PRODUCTS AND ENGINEERING.

DESIGN DATA/DESIGN CRITERIA

REFER TO SPECIAL PROVISION SECTION 580 "PREFABRICATED STEEL PEDESTRIAN BRIDGE".

MATERIALS

BRIDGE SHALL BE CONSTRUCTED AND INSTALLED IN ACCORDANCE WITH BRIDGE SYSTEM SPECIFICATIONS.

CONCRETE FOR ABUTMENTS SHALL HAVE A MINIMUM COMPRESSIVE STRENGTH OF 4,500 PSI.

REINFORCING STEEL FOR FOOTINGS SHALL CONFORM TO ASTM A615, A616 OR A617-GRADE 60.

CONCRETE FOR BRIDGE DECK SHALL HAVE A MINIMUM COMPRESSIVE STRENGTH OF 4,500 PSI.

NO.	DATE:	DESCRIPTION	APP'D

REVISIONS

DEPARTMENT OF PUBLIC WORKS
400 EAST STEWART
LAS VEGAS, NEVADA 89101
(702) 229-6276

poggemeyer design group, inc.
engineers • planners • surveyors • landscape architects
2801 North Tenaya Way, Las Vegas, NV 89128 • p) 702.255.8100 • f) 702.255.8775

TITLE: CEDAR DRAINAGE TRAIL
CITY OF LAS VEGAS

SHEET: PEDESTRIAN BRIDGE
STRUCTURAL PLANS + SECTIONS

DRAWN BY:	DESIGNED BY:	CHECKED BY:	PROJECT NO:	SCALE:
AP/BMR 07/30/07	MS 07/30/07	WK 07/30/07	05282C	AS NOTED HORIZ N/A VERT

PROFESSIONAL ENGINEER
EHRAN M. SATTARZADEH
Exp. 6-30-08
CIVIL
No. 12843
STATE OF NEVADA
7/30/07

Sheet
STR1.01
16 of 45
DRAWING NO.
676-06

V:\05282 CLV Trails-Trailhead\...\Structures\STR1.01.dwg 10/16/2006 11:32:39 AM PST