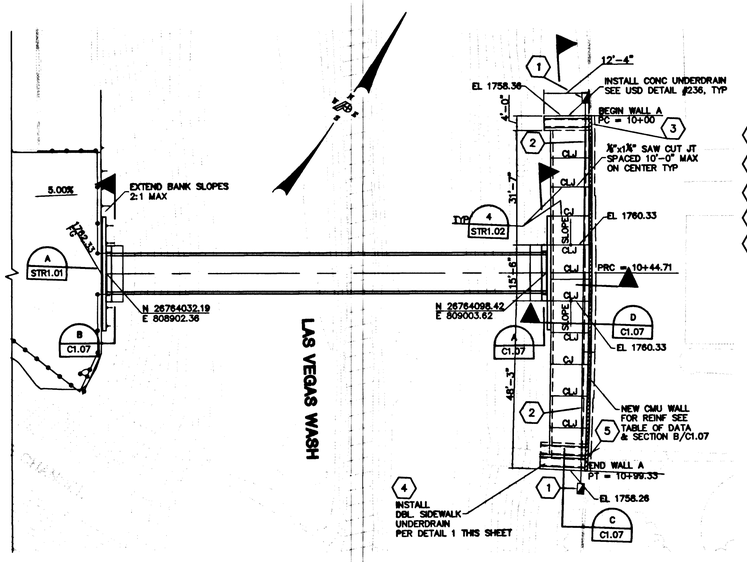

BRIDGE GENERAL PLAN

1"=20'

CONSTRUCTION NOTES

1. INSTALL NEW NO. 3-1/2 STREETLIGHT (SL) PULL BOX PER USD NO. 404.110
2. INSTALL 2" STREETLIGHT CONDUIT WITH PULL STRING BETWEEN (SL) PULL BOXES.
3. INSTALL SIDEWALK UNDER DRAIN PER UNIFORM STANDARD DRAWING NO. 236
4. INSTALL DOUBLE SIDEWALK UNDERDRAIN PER DETAIL 1 THIS SHEET
5. INSTALL BLOCK WALL OPENING PER DETAIL 2 THIS SHEET

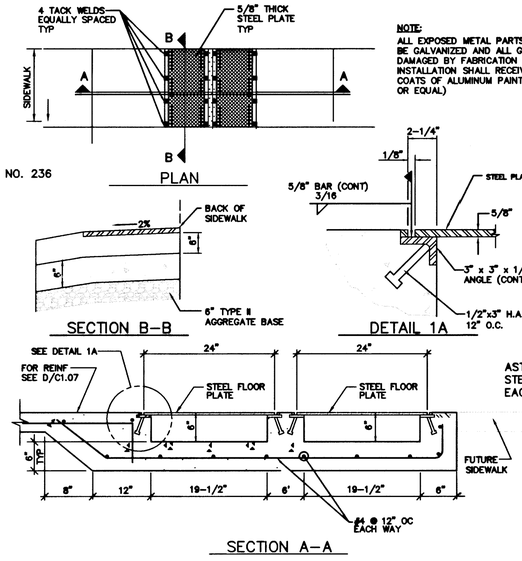

NOTE:
ALL EXPOSED METAL PARTS SHALL BE GALVANIZED AND ALL GALVANIZING DAMAGED BY FABRICATION OR INSTALLATION SHALL RECEIVE TWO COATS OF ALUMINUM PAINT (GALVONOX OR EQUAL)

DOUBLE SIDEWALK UNDERDRAIN

NO SCALE

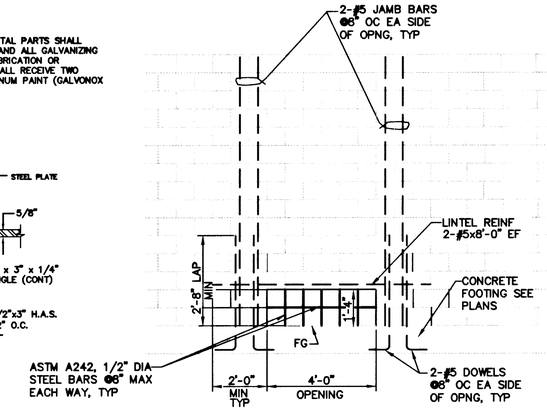

BLOCK WALL OPENING

NO SCALE

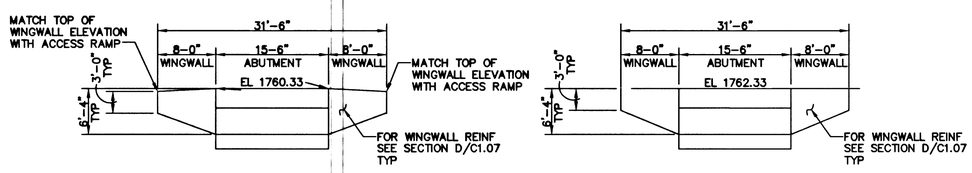

ABUTMENT EAST ELEVATION

1"=10'

ABUTMENT WEST ELEVATION

1"=10'

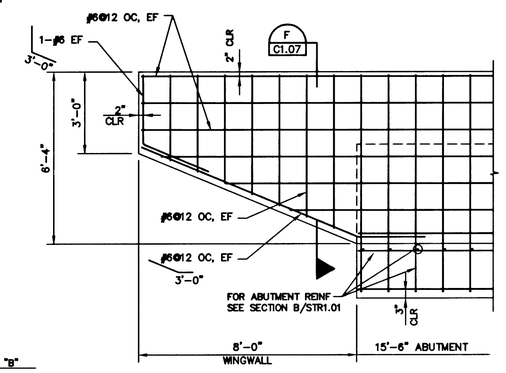

WINGWALL TYPICAL SECTION

3/8"=1'-0"

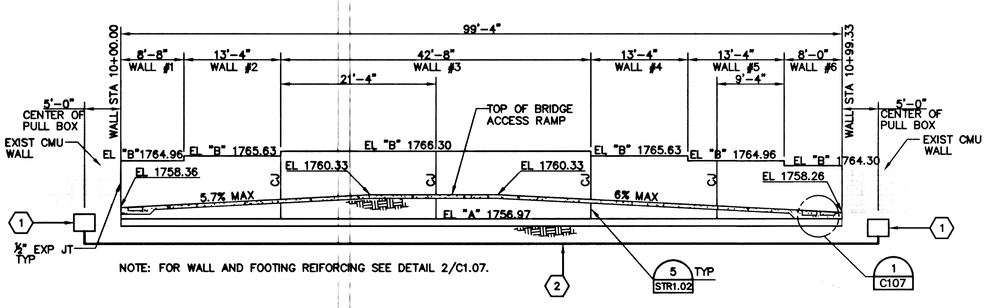

NOTE: FOR WALL AND FOOTING REIFORCING SEE DETAIL 2/C1.07.

CMU WALL ELEVATION

1"=10'

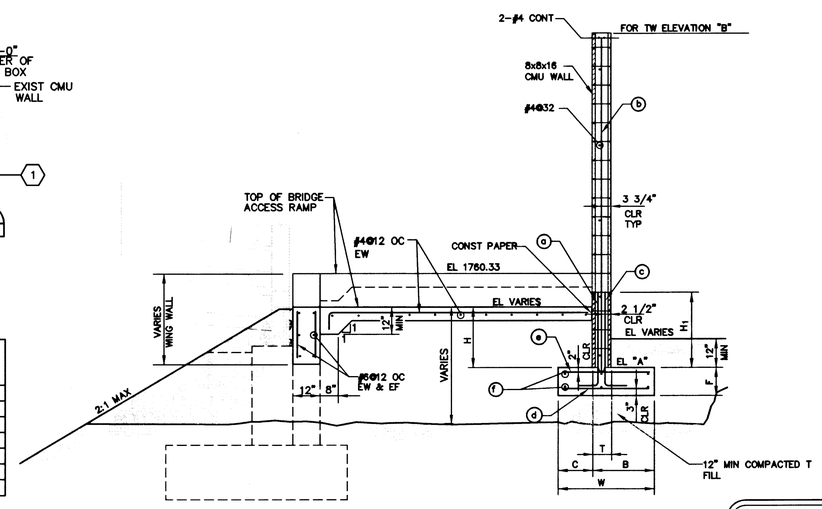

NOTES:
1. FOR MASONRY CONTROL JOINT SPACING SEE CMU WALL ELEVATION C/C1.07.
2. FOR CONTROL JOINT DETAIL SEE 5/STR1.02.

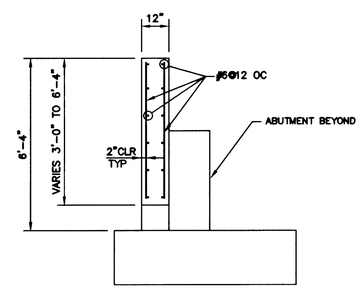

WINGWALL TYPICAL SECTION

3/8"=1'-0"

TABLE OF REINFORCING STEEL, DIMENSIONS, AND DATA

WALL No.	EL "A"	EL "B"	H MAX	H_1	W	C	B	F	T	ⓐ BARS	ⓑ BARS	ⓒ BARS	ⓓ BARS	ⓔ BARS	ⓕ BARS	REMARKS
1	1756.97	1764.96	2'-0"	2'-8"	2'-6"	11"	1'-7"	1'-0"	8"	#5@16*	#5@32*	–	#4@16	#4@16	#4@18	
2	1756.97	1765.63	2'-8"	2'-8"	3'-0"	1'-2"	1'-10"	1'-0"	8"	#5@16	#5@32*	#5@16	#4@16	#4@16	#4@18	
3	1756.97	1766.30	3'-4"	2'-8"	3'-0"	1'-2"	1'-10"	1'-0"	8"	#5@16	#5@32*	#5@16	#4@16	#4@16	#4@18	
4	1756.97	1765.63	2'-8"	2'-8"	3'-0"	1'-2"	1'-10"	1'-0"	8"	#5@16	#5@32*	#5@16	#4@16	#4@16	#4@18	
5	1756.97	1764.96	2'-0"	2'-8"	2'-6"	11"	1'-7"	1'-0"	8"	#5@16*	#5@32*	–	#4@16	#4@16	#4@18	
6	1756.97	1764.30	1'-4"	2'-8"	2'-6"	11"	1'-7"	1'-0"	8"	#5@16*	#5@32*	–	#4@16	#4@16	#4@18	

* PLACE VERTICAL BARS AT CENTER OF WALL

TABLE OF REINFORCING STEEL, DIMENSIONS, DATA AND SECTION

NTS

Call before you Dig
Call before you Underground 1-702-455-7511
Call before you Overhead 1-702-227-2929
Call 811 1-800-227-2600
1-702-455-7544

REVISIONS

NO.	DATE:	DESCRIPTION	APP'D

DEPARTMENT OF AMINISTRATIVE SERVICES
400 EAST STEWART
LAS VEGAS, NEVADA 89101
(702) 229-6276

poggemeyer design group, inc.
engineers • planners • surveyors • landscape architects
2801 North Tenaya Way • Las Vegas, NV 89128 • p) 702.255.8100 • f) 702.255.6375

TITLE: CEDAR DRAINAGE TRAIL
CITY OF LAS VEGAS

SHEET: CIVIL PLAN (PEDESTRIAN BRIDGE)

DRAWN BY:	DESIGNED BY:	CHECKED BY:	PROJECT NO:	SCALE:
AP/BMR 07/30/07	AP 07/30/07	WCK 07/30/07	05282C	AS NOTED HORIZ N/A VERT

PROFESSIONAL ENGINEER STATE OF NEVADA
MEHRAN M. SATTARZADEH
Exp. 6-30-08
CIVIL
No. 12843

Sheet C1.07
15 of 45
DRAWING NO. 676-06