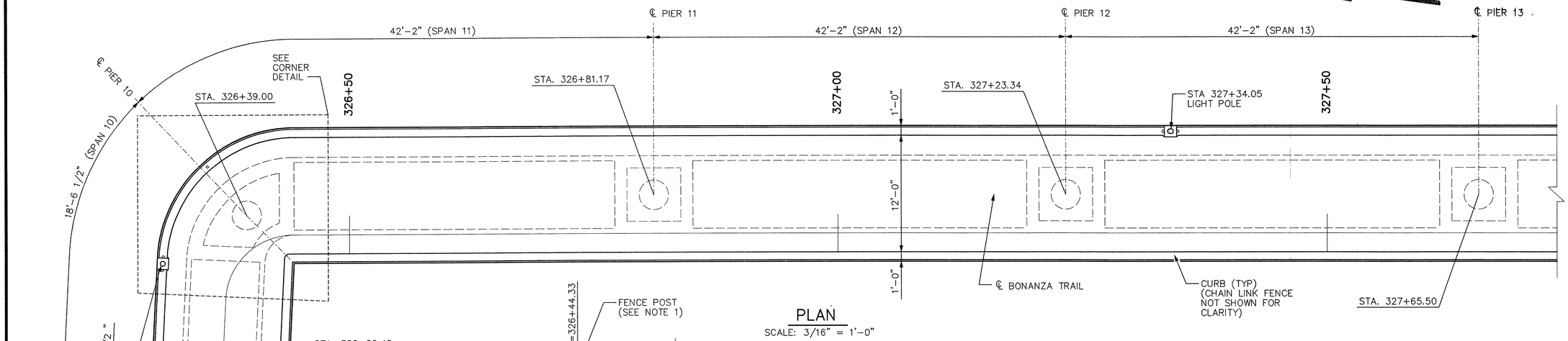

PLAN

SCALE: 3/16" = 1'-0"

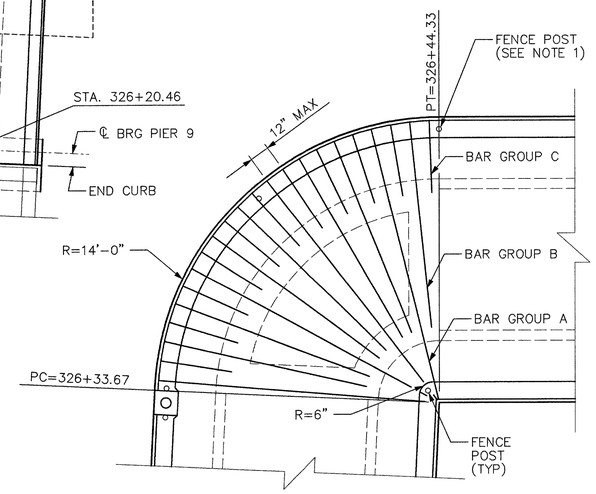

CORNER DETAIL

NTS

NOTES:

1. CURVE HORIZONTAL FENCE RAIL TO MATCH CURB RADIUS. SEE DRAWING NO. ST-24 FOR FENCE DETAILS.
2. BEND ALL LONGITUDINAL REINFORCING TO MATCH RADIUS.
3. PLACE STIRRUPS RADIALLY AS SHOWN.

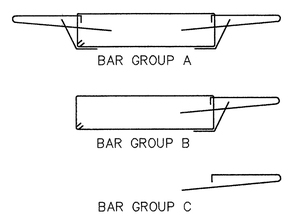

NOTES:

1. SEE DRAWING NO. ST-23 FOR SECTIONS A-A AND B-B.
2. COLUMN REINFORCEMENT NOT SHOWN FOR CLARITY.
3. TRANSVERSE REINF. NOT SHOWN FOR CLARITY. SEE DRAWING NO. ST-23.
4. SEE DRAWING NO. ST-23 FOR CAPITAL DETAIL.

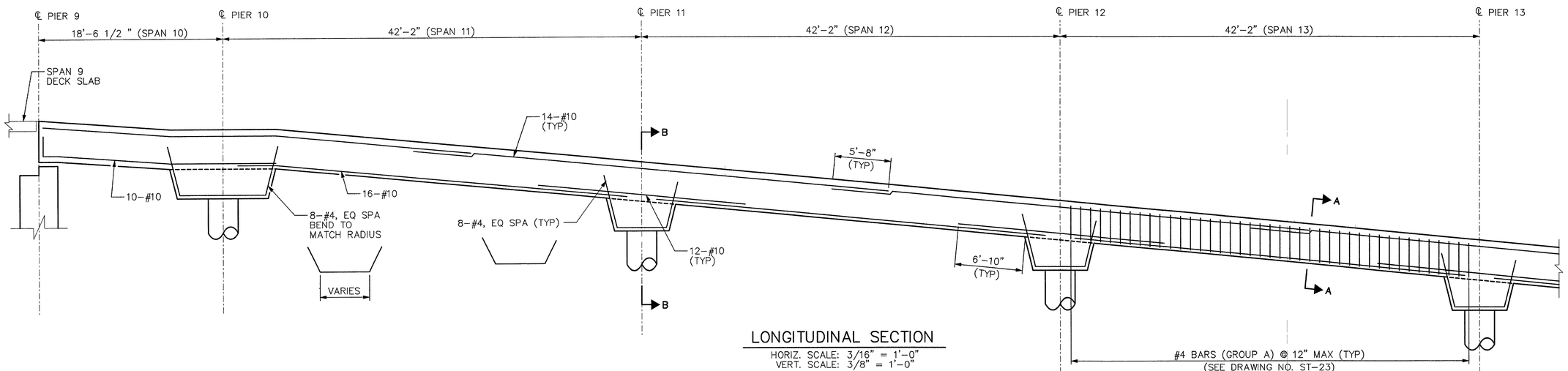

LONGITUDINAL SECTION

HORIZ. SCALE: 3/16" = 1'-0"
VERT. SCALE: 3/8" = 1'-0"

REVISIONS | DATE

SCALE (H): AS NOTED | SCALE (V): AS NOTED | DATE: 12-2-05
DRAWN BY: PCM | DESIGNED BY: JSS | CHECKED BY: CLN

Kimley-Horn and Associates, Inc.
Engineering, Planning, and Environmental Consultants
1050 E Flamingo Road, Suite S200, Las Vegas, NV, 89119
Ph (702) 734-5666 Fax (702) 734-5666
© 2005

CITY OF LAS VEGAS NEVADA

DEPARTMENT OF PUBLIC WORKS

PROJECT: BONANZA TRAIL PHASE 1

SHEET: SPAN 10-13 DETAILS

PROFESSIONAL ENGINEER - STATE OF NEVADA
CECIL L. NARRON
No. 12647
12/2/05

DRAWING NO. ST-19 | 32/60

06.1730.02

12/02/2005 08:43:12 AM bjmiller
s:\#092256009_bonanzaedgm\#span_10-13.dgn

86101