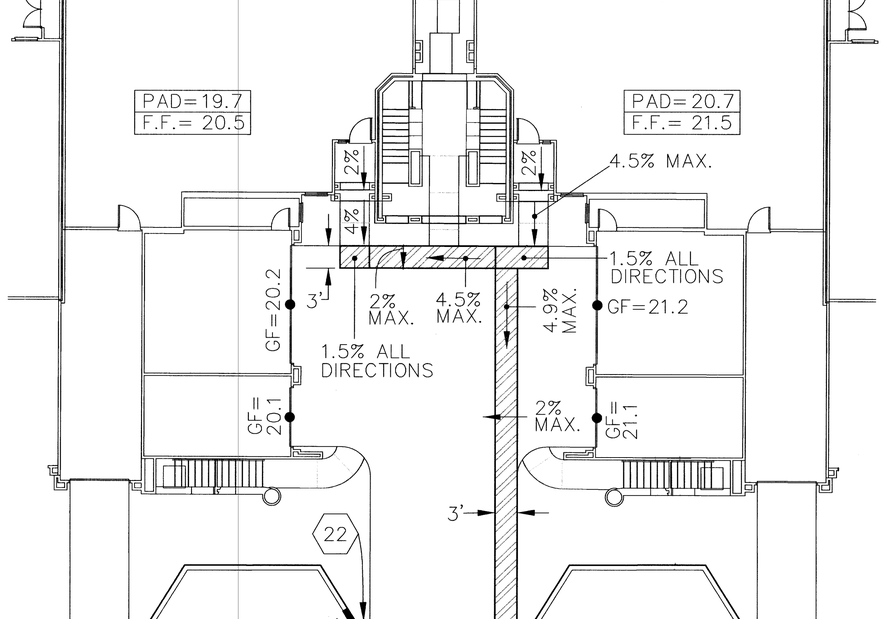

NOTES: (22) TRANSITION FROM 0" ROLL CURB
(23) 0" CURB FLUSH WITH PAVEMENT

Q MOTOR COURT ACCESSIBLE ROUTE (TYP.)
1"=10'

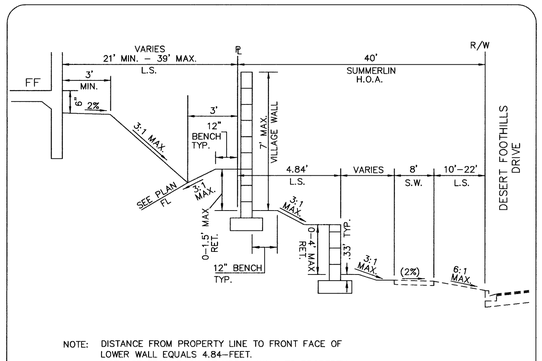

NOTE: DISTANCE FROM PROPERTY LINE TO FRONT FACE OF LOWER WALL EQUALS 4.84-FEET.
DISTANCE FROM BACK OF UPPER WALL TO PROPERTY LINE EQUALS 0.17-FEET.

N DESERT FOOTHILLS DRIVE-TYPICAL SECTION
N.T.S.

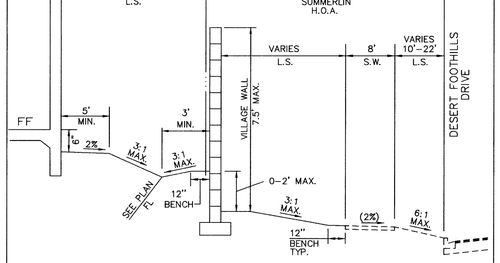

NOTE: DISTANCE FROM PROPERTY LINE TO FRONT FACE OF LOWER WALL EQUALS 4.84-FEET.
DISTANCE FROM BACK OF UPPER WALL TO PROPERTY LINE EQUALS 0.17-FEET.

O DESERT FOOTHILLS DRIVE-TYPICAL SECTION
N.T.S.

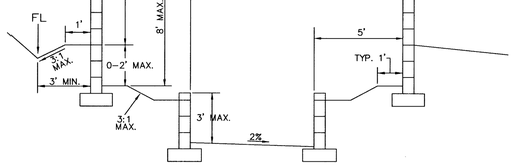

P TYPICAL SECTION
N.T.S.

72693

G.C. WALLACE, INC.
Engineers/Planners/Surveyors
1555 SOUTH RAINBOW BLVD./LAS VEGAS, NEVADA 89146
TELEPHONE: (702) 804-2000 • FAX: (702) 804-2299

DESIGN:
DRAWN:
CHECK:
ISSUE DATE:
ISSUE EDITOR:
PLOT DATE: 08-03-04
PLOT TIME: 19:55:07
mbonnette
F:\472\008\dwg\mpros\V3050A\c012A.dwg

REV	DATE	DESCRIPTION	DATE AGEN. APP	DATE GCW. APP
1		ADDED SHEET TO PLAN SET	8/4/04 HES	

ENGINEER: STATE OF NEVADA, SONNY W. NEIGHBORS, No. 10110, PROFESSIONAL ENGINEER, Date 10/31/2006, CIVIL

DATE: 8-4-04

CORONADO
WESTMARK HOMES
GRADING SECTIONS II

SHEET
C-12A
10TH 4779
12A OF 12A SHTS