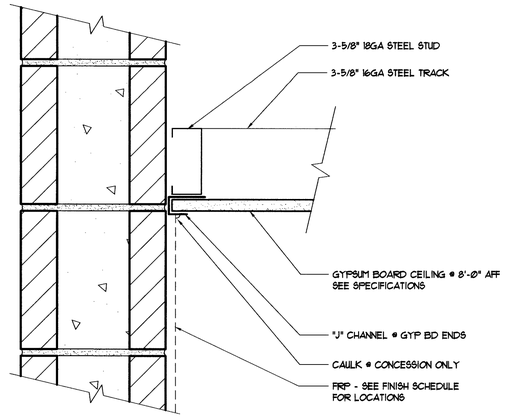


## 7 Ceiling Edge Detail

Scale: 3" = 1'-0" A9-07

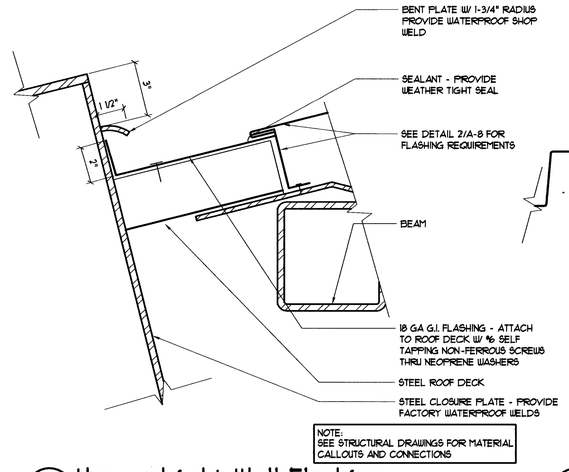


NOTE:
SEE STRUCTURAL DRAWINGS FOR MATERIAL CALLOUTS AND CONNECTIONS

## 4 Upper Light Well Flashing

Scale: 3" = 1'-0" A9-04

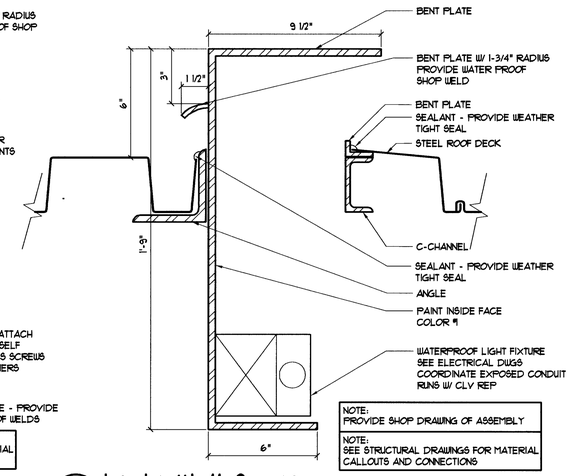


NOTE:
PROVIDE SHOP DRAWING OF ASSEMBLY

NOTE:
SEE STRUCTURAL DRAWINGS FOR MATERIAL CALLOUTS AND CONNECTIONS

## 1 Light Well Section

Scale: 3" = 1'-0" A9-01

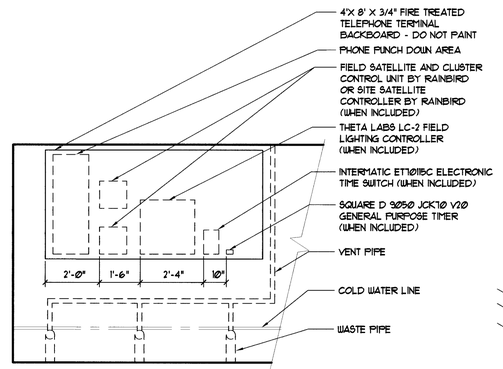


NOTE: DRAWING DEPICTS LOCATION OF STANDARD CLV EQUIPMENT. SEE ELECTRICAL, CIVIL, AND LANDSCAPE DRAWINGS FOR EQUIPMENT USED IN PROJECT

## 8 Phone Board Standard Elevation

Scale: 3/8" = 1'-0" A9-08

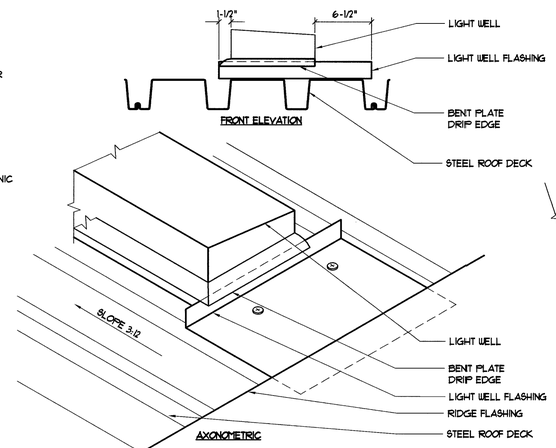


## 5 Light Well Flashing Isometric

Scale: Isometric A9-05

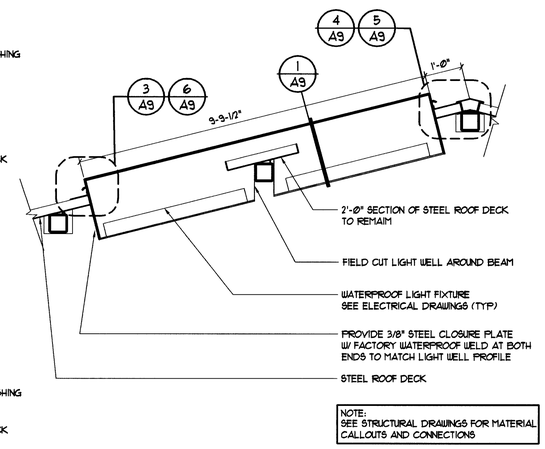


NOTE:
SEE STRUCTURAL DRAWINGS FOR MATERIAL CALLOUTS AND CONNECTIONS

## 2 Light Well Section

Scale: 1/2" = 1'-0" A9-02

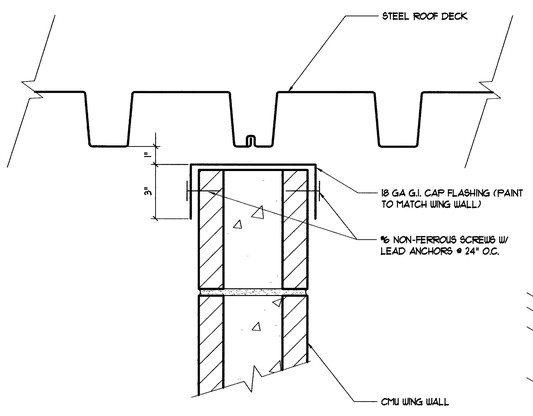


## 9 Wing Wall Cap Flashing

Scale: 3" = 1'-0" A9-09

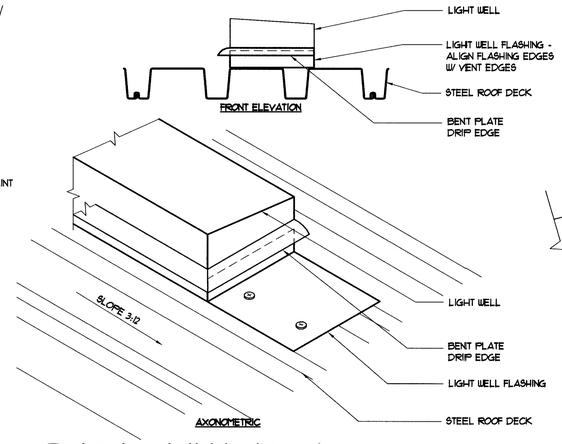


## 6 Light Well Flashing Isometric

Scale: Isometric A9-06

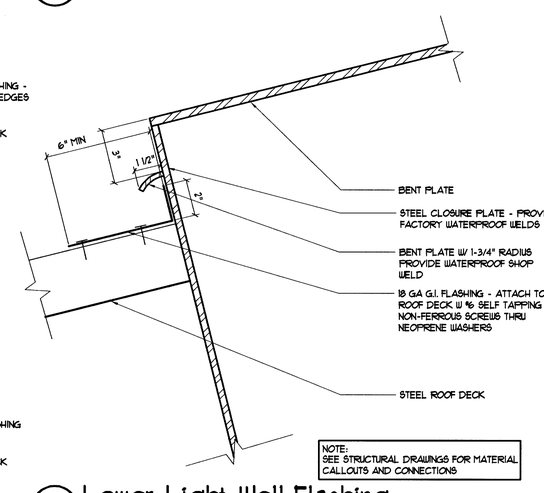


NOTE:
SEE STRUCTURAL DRAWINGS FOR MATERIAL CALLOUTS AND CONNECTIONS

## 3 Lower Light Well Flashing

Scale: 3" = 1'-0" A9-03

66602

CITY OF LAS VEGAS NEVADA

REVISIONS

CONSULTANT

DEPARTMENT OF PUBLIC WORKS

Bonanza-Sandhill Park Concession Building

Details

STAMP

AS-BUILT

OWNER: CITY OF LAS VEGAS
DEPARTMENT OF PUBLIC WORKS
ARCHITECTURAL SERVICES

400 EAST STEWART AVENUE
LAS VEGAS, NEVADA 89101
PHONE: (702) 229-6535
FAX: (702) 382-3232
TDD: (702) 386-9108

| | |
|---|---|
| DRAWN | mdp |
| FILE | CONA-9 |
| DATE | 8/26/02 |
| SCALE | As Noted |
| BID NO | 02.15341.07 |
| CLV DWG NO | 650.69 |
| SHT NO | 49 RCB—A9 |

DRAWINGS AS INSTRUMENTS OF SERVICE ARE THE PROPERTY OF THE DESIGN PROFESSIONAL WHOSE STAMP OF CERTIFICATION APPEARS ON THE DRAWINGS AND SPECIFICATIONS REMAINED BY THE CLIENT MAY BE UTILIZED ONLY FOR OCCUPYING THE PROJECT FOR WHICH THEY WERE PREPARED AND NOT FOR THE CONSTRUCTION OF ANY OTHER PROJECT N.A.C. 623.310
WRITTEN CONSENT IS STRICTLY PROHIBITED COPIES OF THE DRAWINGS AND SPECIFICATIONS ANY USE OR REPRODUCTION IN WHOLE OR IN PART WITHOUT WRITTEN CONSENT IS STRICTLY PROHIBITED