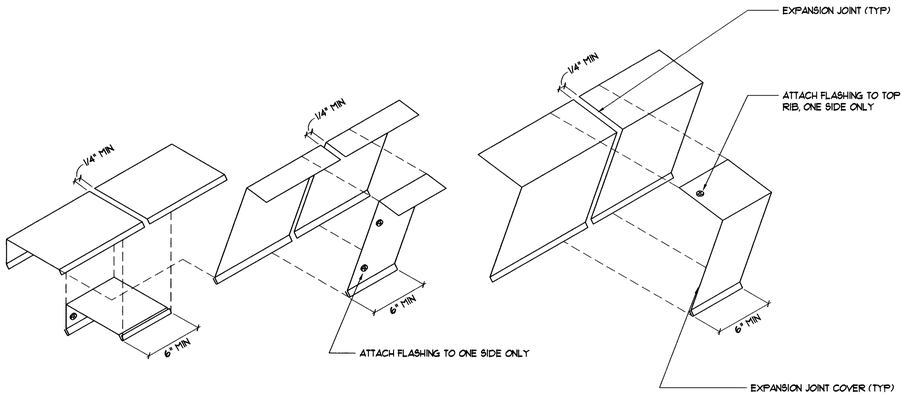

9 Flashing Exploded View

Scale: Axonometric — A8-09

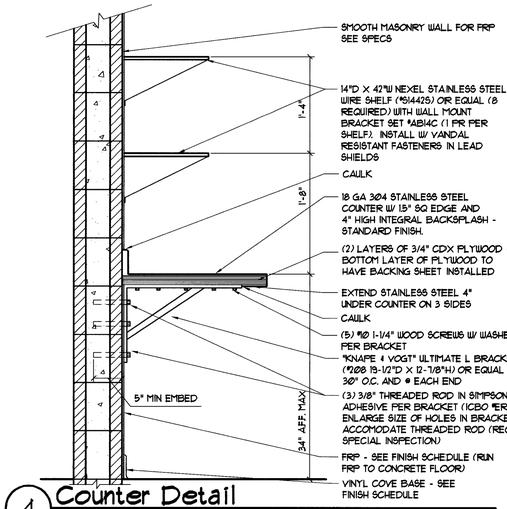

4 Counter Detail

Scale: 1" = 1'-0" — A8-04

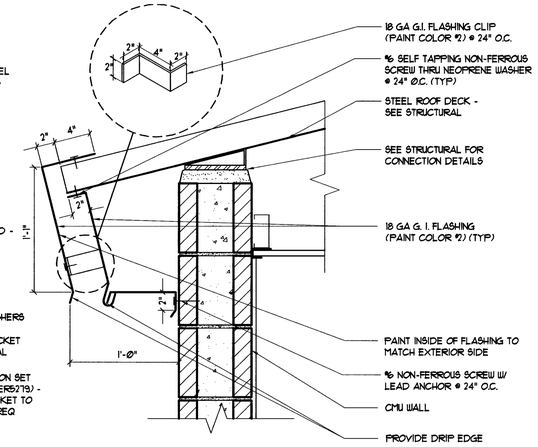

1 Eave Flashing Detail

Scale: 1-1/2" = 1'-0" — A8-01

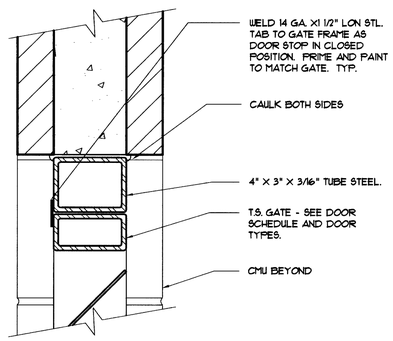

10 Head @ Mech. Encl. Gate

Scale: 3"=1'-0" — A8-10

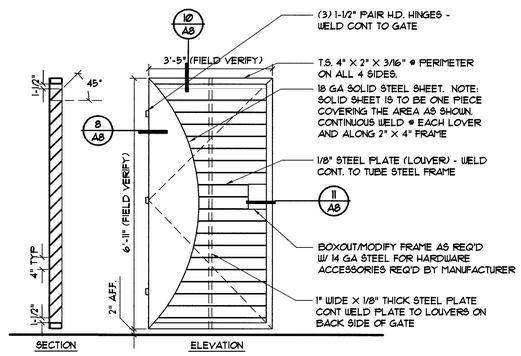

NOTE: CORNERS OF 4" X 2" T.S. ARE TO BE MITERED JOINTS AND TO HAVE FULL WELDS. GROUND ALL WELDS SMOOTH. PRIME AND PAINT. PROVIDE FULLY DIMENSIONED AND DETAILED SHOP DRAWINGS PRIOR TO FABRICATION.

7 Gate - Enlarged Elevation

Scale: 1/2"=1'-0" — A8-07

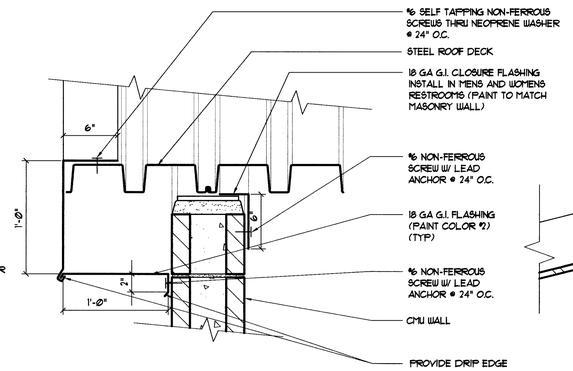

5 Gable Flashing Detail

Scale: 1-1/2" = 1'-0" — A8-05

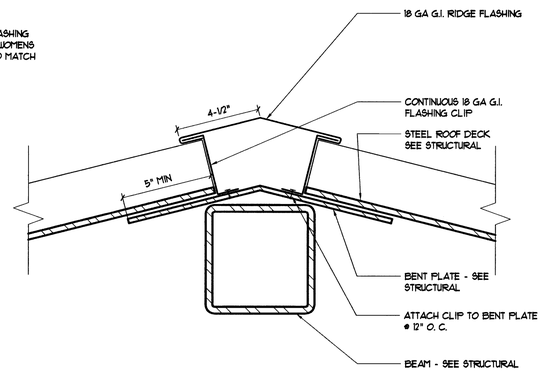

2 Ridge Flashing Detail

Scale: 3" = 1'-0" — A8-02

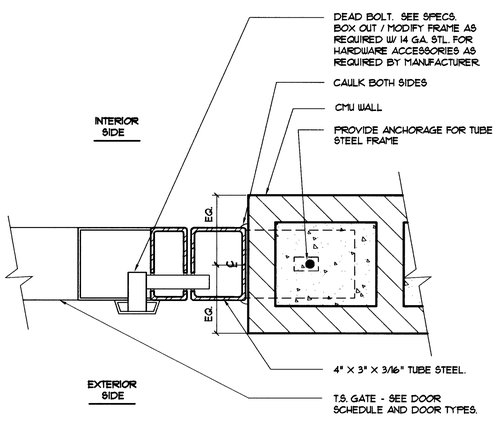

11 Jamb Det. @ Mech Encl. Gate

LATCH SIDE

Scale: 3"=1'-0" — A8-11

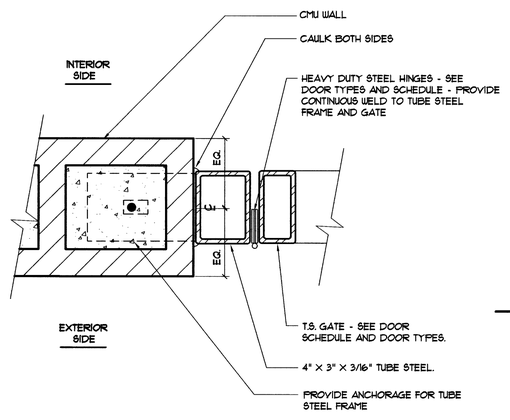

8 Jamb Det. @ Gate

Scale: 3"=1'-0" — A7-08

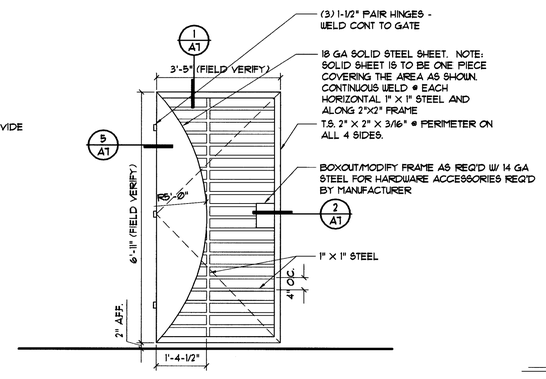

NOTE: CORNERS OF 2" X 2" T.S. ARE TO BE MITERED JOINTS AND TO HAVE FULL WELDS. GROUND ALL WELDS SMOOTH. PRIME AND PAINT. PROVIDE FULLY DIMENSIONED AND DETAILED SHOP DRAWINGS PRIOR TO FABRICATION.

NOTE: REFERENCE ELEVATIONS FOR LEFT OR RIGHT HAND PATTERN. GATES ARE MIRROR IMAGE OF EA. OTHER.

6 Gate - Enlarged Elevation

Scale: 1/2"=1'-0" — A7-06

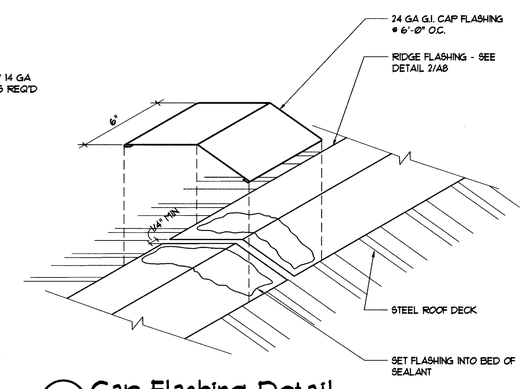

3 Cap Flashing Detail

Scale: Axonometric — A8-03

66601

CITY OF LAS VEGAS NEVADA

REVISIONS

CONSULTANT

DEPARTMENT OF PUBLIC WORKS

Bonanza-Sandhill Park Concession Building

Details

STAMP

AS-BUILT

OWNER: CITY OF LAS VEGAS
DEPARTMENT OF PUBLIC WORKS
ARCHITECTURAL SERVICES

400 EAST STEWART AVENUE
LAS VEGAS, NEVADA 89101
PHONE: (702) 229-6535
FAX: (702) 382-3232
TDD: (702) 386-9108

DRAWN	map
FILE	CONA-8
DATE	8/26/02
SCALE	As Noted
BID NO	02.15341.07
CLV DWG NO	65069
SHT NO	48

RCB—A8

DRAWINGS AS INSTRUMENTS OF SERVICE ARE THE PROPERTY OF THE DESIGN PROFESSIONAL WHOSE STAMP OF CERTIFICATION APPEARS ON THE DRAWINGS AND SPECIFICATIONS RETAINED BY THE CLIENT MAY BE UTILIZED ONLY FOR OCCUPYING THE PROJECT FOR WHICH THEY WERE PREPARED AND NOT FOR THE CONSTRUCTION OF ANY OTHER PROJECT. N. A. S. 623.780. WRITTEN CONSENT IS STRICTLY PROHIBITED COPIES OF THE DRAWINGS AND SPECIFICATIONS RETAINED BY THE CLIENT MAY BE UTILIZED ONLY FOR OCCUPYING THE PROJECT FOR WHICH THEY WERE PREPARED AND NOT FOR THE CONSTRUCTION OF ANY OTHER PROJECT IN WHOLE OR IN PART WITHOUT WRITTEN CONSENT IS STRICTLY PROHIBITED. ANY USE OR REPRODUCTION IN WHOLE OR IN PART WITHOUT WRITTEN CONSENT OF THE DESIGN PROFESSIONAL WHOSE STAMP OF CERTIFICATION APPEARS ON THE DRAWINGS AND SPECIFICATIONS RETAINED BY THE CLIENT MAY BE UTILIZED ONLY FOR OCCUPYING THE PROJECT FOR WHICH THEY WERE PREPARED AND NOT FOR THE CONSTRUCTION OF ANY OTHER PROJECT.