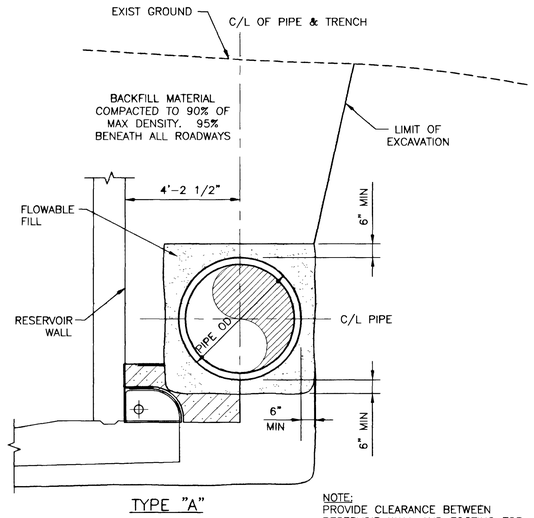

TYPE "A"

NOTE:
PROVIDE CLEARANCE BETWEEN RESERVOIR WALL AND FOOTING FOR INSPECTION.

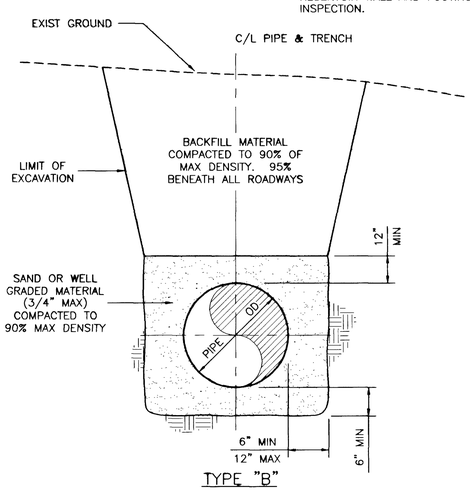

TYPE "B"

PIPE TRENCH SCHEDULE					
DESIGNATION	PIPE SIZE	LOCATION	TYPE		
			A	B	CONC ENCASE
LINE "A" 0+01.75 TO 1+28.00	60"	OUTLET			X
LINE "A" 1+42.00 TO 2+11.50	60"	OUTLET		X	
LINE "B" 2+11.50 TO 3+09.08	60"	OUTLET		X	
LINE "D" AND LINE "E" ALL	60"	INLET	X		
LINE "F" 0+01.17 TO 0+58.50	54" & 48"	OVERFLOW	X		
LINE "F AND LINE "G"" 0+58.50 TO 2+93.44	48"	OVERFLOW		X	

(CONCRETE ENCASEMENT – SEE DETAILS THIS SHEET)

NOTE: BACKFILL OR ENCASEMENT CANNOT BE INSTALLED AGAINST THE RESERVOIR WALL.

TRENCH SECTION
SCALE: 3/8" = 1'-0"
7 / C19 / C8

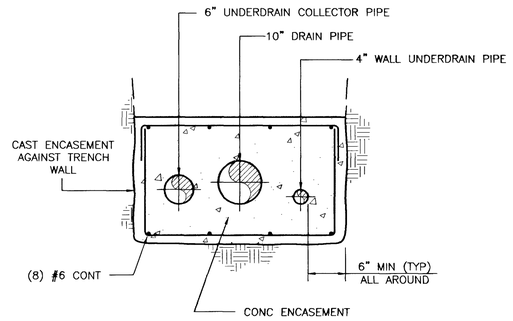

(MULTIPLE PIPE - TYPE "A") CONCRETE ENCASEMENT
SCALE: NONE
5 / C19 / C10

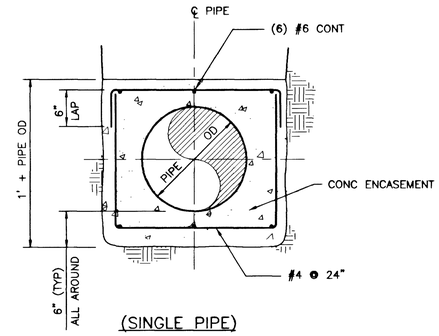

(SINGLE PIPE)

CONCRETE ENCASEMENT
SCALE: NONE
2 / C19 / C10

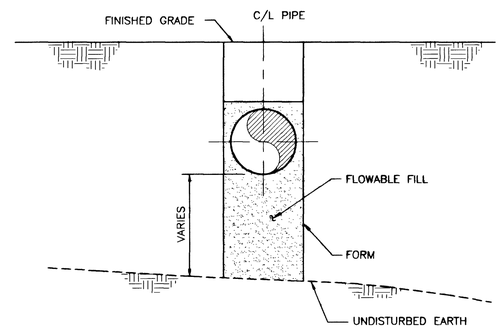

SECTION

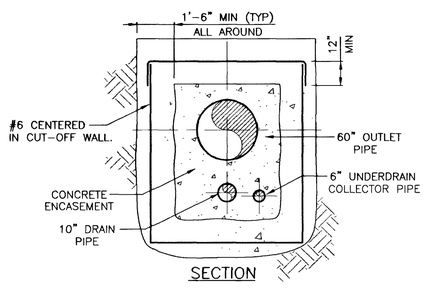

SECTION

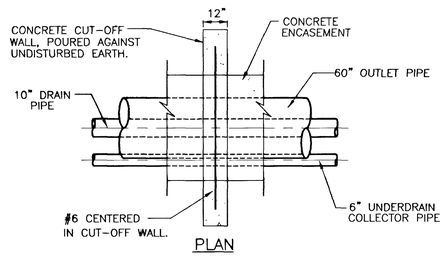

PLAN

CONCRETE CUT-OFF WALL
SCALE: NONE
6 / C19 / C10

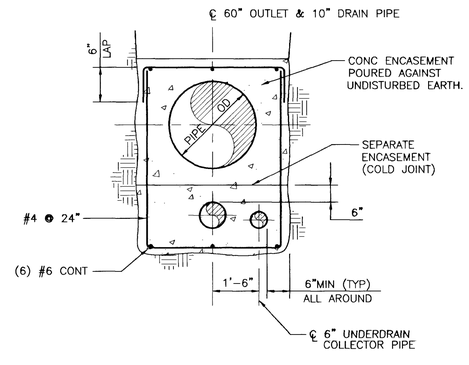

(MULTIPLE PIPE - TYPE "B") CONCRETE ENCASEMENT
SCALE: NONE
3 / C19 / C10,M9

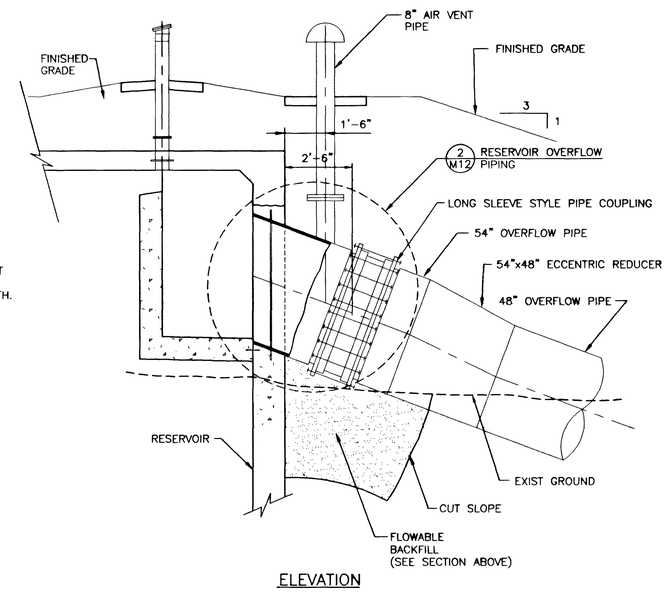

ELEVATION

OVERFLOW PIPE LAID IN FILL AREA
SCALE: 3/8" = 1'-0"
1 / C19 / C8,S10

CLV DRAWING #565-380
CLV CIVIL SHEET 25 OF 30

54702

LAS VEGAS VALLEY WATER DISTRICT

G.C. WALLACE, INC.
Engineers/Planners/Surveyors
1555 SOUTH RAINBOW BLVD./LAS VEGAS, NEVADA 89146
TELEPHONE: (702) 804-2000 • FAX: (702) 804-2299

VERIFY SCALE
1/2 0 1/2 1
BAR REPRESENTS ONE AND ONE-HALF INCHES ON ORIGINAL

3205 ZONE RESERVOIR EXPANSION

PIPING DETAILS I

SCALE AS SHOWN

1046C19.DWG Plot @ XX/XX/XX XX:XX

DRAWN BY: R. A. BERGER	04/12/02	
CHECKED BY: M. W. MAUZE	04/12/02	
RECOMMENDED BY: L. STEVEN ANDERSON	DATE	
ACCEPTED BY: DESIGN MANAGER	DATE	jlittle 09:14:39 06-13-03

PROFESSIONAL ENGINEER – STATE OF NEVADA – HOWARD EVAN BERGER – 06/20/2004 – CIVIL – No. 4534

REVISIONS:

CONTRACT NUMBER C1046

DRAWING NUMBER C19
SHEET 25 OF 95

G:\62052-223\dwg\improv\Civil\1046C19.dwg