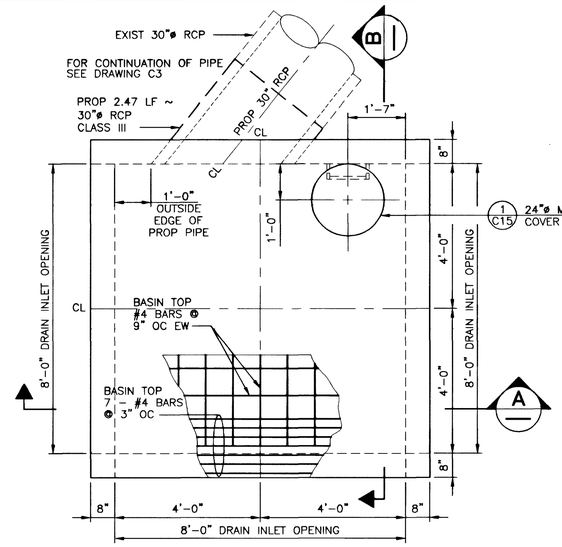

PLAN

NOTE:

SEE USDCCA DRAWINGS "DROP INLET TYPE "C"" DWG NO 413, "DROP INLET FRAME & GRATE" DWG NO 417, "DROP INLET STEEL PLATE ANCORAGE" DWG NO 418 AND "DROP INLET STEEL PLATE & PROTECTION BAR" DWG NO 419, FOR ADDITIONAL INFORMATION.

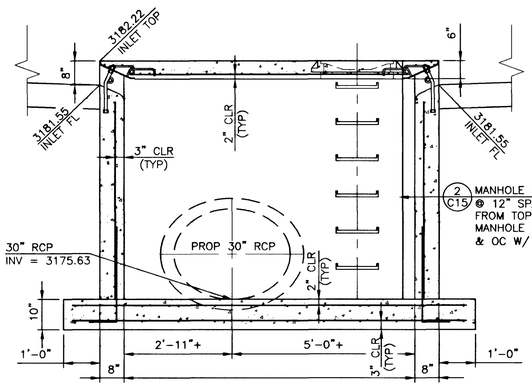

SECTION A

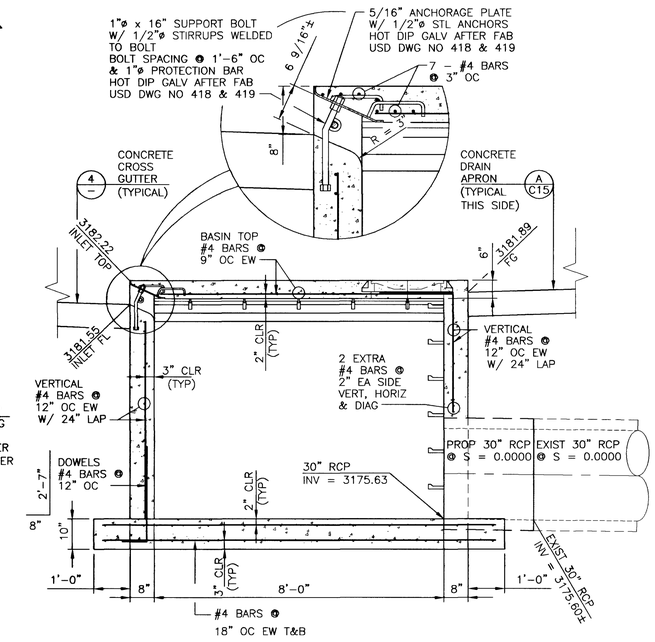

SECTION B

DROP INLET - AREA TYPE

SCALE: 1/2" = 1'-0"

1 C14 C3

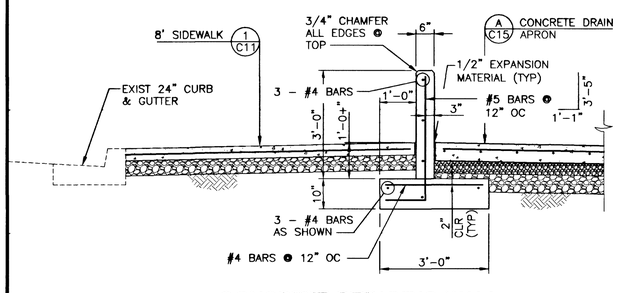

CONCRETE RETAINING WALL TYPE 2 - SECTION (TYPICAL)

SCALE: 1/2" = 1'-0"

3

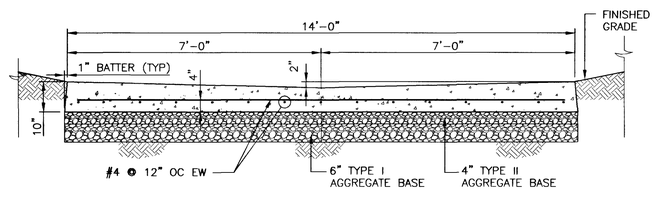

CONCRETE CROSS GUTTER DETAIL TYPE 2 - SECTION (TYPICAL)

SCALE: 1/2" = 1'-0"

4 C14 C2,C3,C14

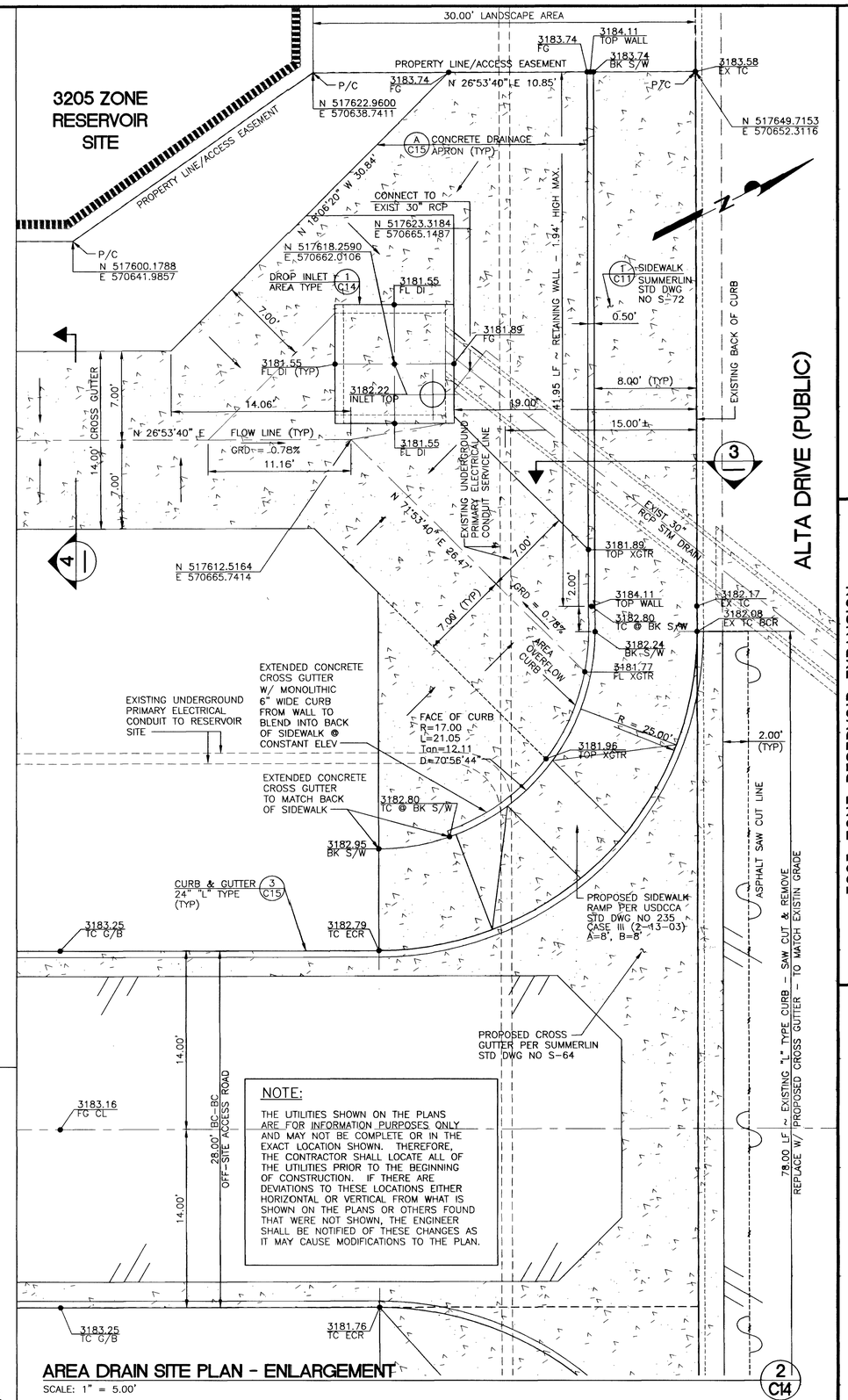

NOTE:

THE UTILITIES SHOWN ON THE PLANS ARE FOR INFORMATION PURPOSES ONLY AND MAY NOT BE COMPLETE OR IN THE EXACT LOCATION SHOWN. THEREFORE, THE CONTRACTOR SHALL LOCATE ALL OF THE UTILITIES PRIOR TO THE BEGINNING OF CONSTRUCTION. IF THERE ARE DEVIATIONS TO THESE LOCATIONS EITHER HORIZONTAL OR VERTICAL FROM WHAT IS SHOWN ON THE PLANS OR OTHERS FOUND THAT WERE NOT SHOWN, THE ENGINEER SHALL BE NOTIFIED OF THESE CHANGES AS IT MAY CAUSE MODIFICATIONS TO THE PLAN.

AREA DRAIN SITE PLAN - ENLARGEMENT

SCALE: 1" = 5.00'

2 C14 C3

CLV DRAWING #565-388
CLV CIVIL SHEET 20 OF 30

LAS VEGAS VALLEY WATER DISTRICT

G.C. WALLACE, INC.
Engineers/Planners/Surveyors
1555 SOUTH RAINBOW BLVD./LAS VEGAS, NEVADA 89146
TELEPHONE: (702) 804-2000 • FAX: (702) 804-2299

VERIFY SCALE
1/2 0 1/2 1
BAR REPRESENTS ONE AND ONE-HALF INCHES ON ORIGINAL

3205 ZONE RESERVOIR EXPANSION

SITE DETAILS IV

SCALE AS SHOWN

1046C14.DWG Plot @ XX/XX/XX XX:XX

DRAWN BY: J. C. LITTLE	07/08/02	
CHECKED BY: M. W. MAIZE	07/12/02	
RECOMMENDED BY: L. STEVEN ANDERSON	DATE	
ACCEPTED BY: DESIGN MANAGER	DATE	

PROFESSIONAL ENGINEER - STATE OF NEVADA
HOWARD VANDER MEER
Exp. 06/30/2004
CIVIL
No. 4534
07-15-03

CONTRACT NUMBER
C1046

DRAWING NUMBER C14
SHEET 20 OF 95

REVISIONS:

G:\62052-223\dwg\Improv\Civil\1046C14.dwg
Jittle
06-13-03 09:11:47

546967