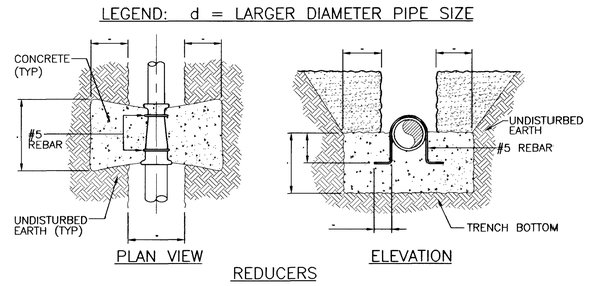

REDUCERS

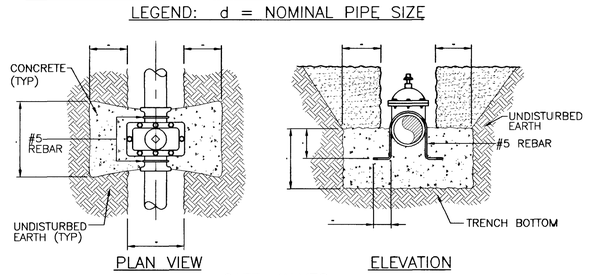

GATE VALVES

NOTES

1. ALL CONCRETE SHALL BE 3000 PSI MINIMUM 28 DAYS COMPRESSIVE STRENGTH
2. ALL VALVES AND EXPOSED REBAR TO BE COATED AND WRAPPED IN ACCORDANCE WITH SECTION 09965 OF THE LVVWD SPECS, PROTECTIVE COATINGS.

ANCHOR BLOCK DETAILS FOR IN-LINE REDUCERS OR GATE VALVES 6" THROUGH 12" DIAMETER

4 / C13

SCALE: NONE

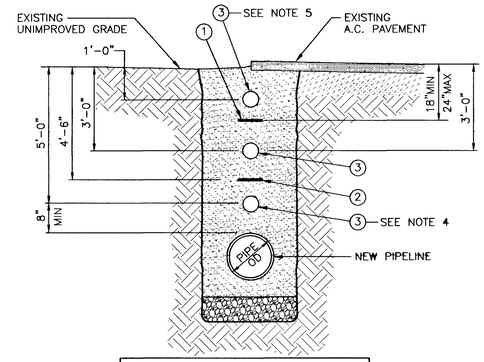

1. PIPE LOCATOR RIBBON – 3" WIDTH
2. PIPE LOCATOR RIBBON – 3" WIDTH (INSTALLED WHEN COVER OF NEW PIPELINE IS 7'-0" OR GREATER)
3. MARKER BALL – SEE NOTES

NOTES

1. CENTER PIPE LOCATOR RIBBON IN TRENCH AND PLACE OVER ENTIRE LENGTH OF ALL TYPES, SIZES AND LOCATIONS OF WATER MAINS
2. MARKER BALLS REQUIRED AT ALL HORIZONTAL BENDS OR DEFLECTIONS, CASING ENDS AND EVERY 400 FEET OF PIPELINE.
3. IF A.C. PAVEMENT EXISTS INSTALL MARKER BALL AT 3'-0" (TYP).
4. IF A CUT TO FINISH GRADE IS ANTICIPATED INSTALL MARKER BALLS AT BOTH 3'-0" AND 5'-0" (TYP).
5. IF A FILL TO FINISH GRADE IS ANTICIPATED INSTALL MARKER BALLS AT BOTH 1'-0" AND 3'-0" (TYP).

PIPE LOCATOR RIBBON AND MARKER BALL INSTALLATION

2 / C13

SCALE: NONE

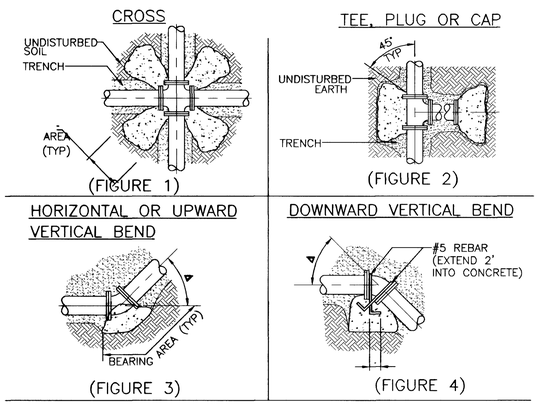

GENERAL NOTES

COAT AND WRAP ALL METAL SURFACES IN ACCORDANCE WITH SECTION 09965 OF THE LVVWD SPECS, PROTECTIVE COATINGS. ALL CONCRETE SHALL BE 3000 PSI MINIMUM, 28 DAYS COMPRESSIVE STRENGTH. CONCRETE IS TO BE PLACED AGAINST UNDISTURBED EARTH. TABLE BELOW DENOTES MINIMUM BEARING AREA OR VOLUME OF THRUST BLOCK. SPECIAL DESIGN CALCULATIONS ARE TO BE SUBMITTED TO LVVWD FOR APPROVAL IF ALLOWABLE SOIL BEARING CAPACITY IS LESS THAN 3000 PSF. ALL VERTICAL SURFACES NOT BEARING AGAINST UNDISTURBED EARTH SHALL BE FORMED.

	BEARING AREA IN SQ FT						CONC/CU YDS		
PIPE ID	FIGURE	FIGURE	FIGURE 3, △				FIGURE 4, △		
	1	2	90°	45°	$22\frac{1}{2}$°	$11\frac{1}{4}$°	45°	$22\frac{1}{2}$°	$11\frac{1}{4}$°
4"	2	2	2	2	1	1	1.0	0.5	0.5
6"	2	3	4	2	1	1	1.5	1.0	0.5
8"	3	5	7	4	2	1	3.0	1.5	1.0
10"	4	8	11	6	3	2	4.0	2.5	1.5
12"	6	11	15	8	4	2	6.0	3.0	1.5
16"	10	20	28	15	8	4	10.5	6.0	3.0
18"	13	25	35	19	10	5	13.5	7.5	3.5
20"	16	31	44	24	12	6	16.0	9.0	4.5
24"	22	44	63	34	17	9	23.5	12.5	6.5

NOTE:
USE OF THRUST BLOCKS FOR PIPE DIAMETERS GREATER THAN 12" REQUIRES PRIOR DISTRICT APPROVAL AND WILL BE EVALUATED ON A CASE BY CASE BASIS.

THRUST BLOCK INSTALLATION

5 / C13

SCALE: NONE

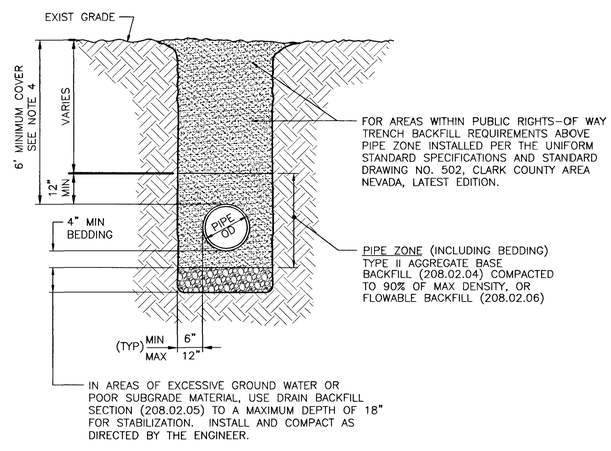

TRENCH BACKFILL - UNPAVED AREAS

3 / C13

SCALE: NONE

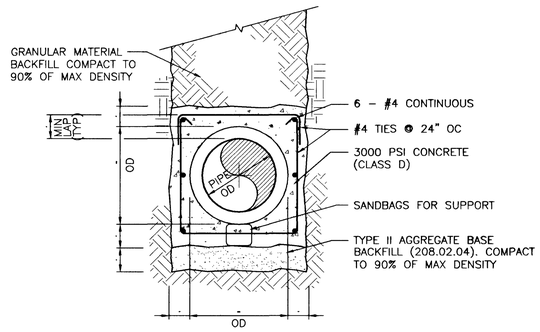

REINFORCED CONCRETE ENCASEMENT

1 / C13

SCALE: NONE

NOTES FOR PAVED AND UNPAVED AREAS

1. ACCEPTABLE METHODS OF COMPACTION
   A BEDDING AND PIPE ZONE AREAS
   FLOODING AND JETTING OR MECHANICAL COMPACTION. (NEVADA DEPARTMENT OF TRANSPORTATION RIGHT OF WAY MECHANICAL COMPACTION ONLY)
   B ABOVE PIPE ZONE
   FLOODING AND JETTING OR MECHANICAL COMPACTION. MECHANICAL COMPACTION ONLY FOR A MINIMUM OF TOP 16" IN PAVED AREAS (NEVADA DEPARTMENT OF TRANSPORTATION RIGHT OF WAY MECHANICAL COMPACTION ONLY)
2. TRENCH EXCAVATION: COMPLY WITH THE CURRENT REGULATIONS AS DETERMINED BY NEVADA OCCUPATIONAL SAFETY AND HEALTH ADMINISTRATION.
3. REFERENCE: UNIFORM STANDARD SPECIFICATIONS FOR PUBLIC WORKS CONSTRUCTION OFF-SITE IMPROVEMENTS CLARK COUNTY AREA NEVADA, LATEST EDITION.
4. MINIMUM COVER IS REFERENCED TO FUTURE FINISHED FINAL GRADES UNLESS OTHERWISE SHOWN ON PROFILE DRAWINGS.
5. SUPPORT PIPE WITH SANDBAGS AND SPOT LOAD PIPE AS REQUIRED DURING INSTALLATION OF FLOWABLE BACKFILL IN PIPE ZONE AND PIPE BEDDING AREAS.

CLV DRAWING #~~565-388~~
CLV CIVIL SHEET 19 OF 30

54696

LAS VEGAS VALLEY WATER DISTRICT

G.C. WALLACE, INC.
Engineers/Planners/Surveyors
1555 SOUTH RAINBOW BLVD./LAS VEGAS, NEVADA 89146
TELEPHONE: (702) 804-2000 • FAX: (702) 804-2299

VERIFY SCALE
1/2 0 1/2 1
BAR REPRESENTS ONE AND ONE-HALF INCHES ON ORIGINAL

3205 ZONE RESERVOIR EXPANSION

SITE DETAILS III

SCALE HORIZ. SCALE AS SHOWN

DRAWN BY: R. A. BERGER 04/12/02
CHECKED BY: M. W. MAIZE 04/12/02
RECOMMENDED BY: L. STEVEN ANDERSON DATE
ACCEPTED BY: DESIGN MANAGER jlittle 09:11:08 DATE 06-13-03

REVISIONS:

CONTRACT NUMBER C1046

DRAWING NUMBER C13
SHEET 19 OF 95

G:\62052-223\dwg\improv\Civil\1046C13.dwg
1046C13.DWG Plot @ XX:XX Plot @ XX/XX/XX