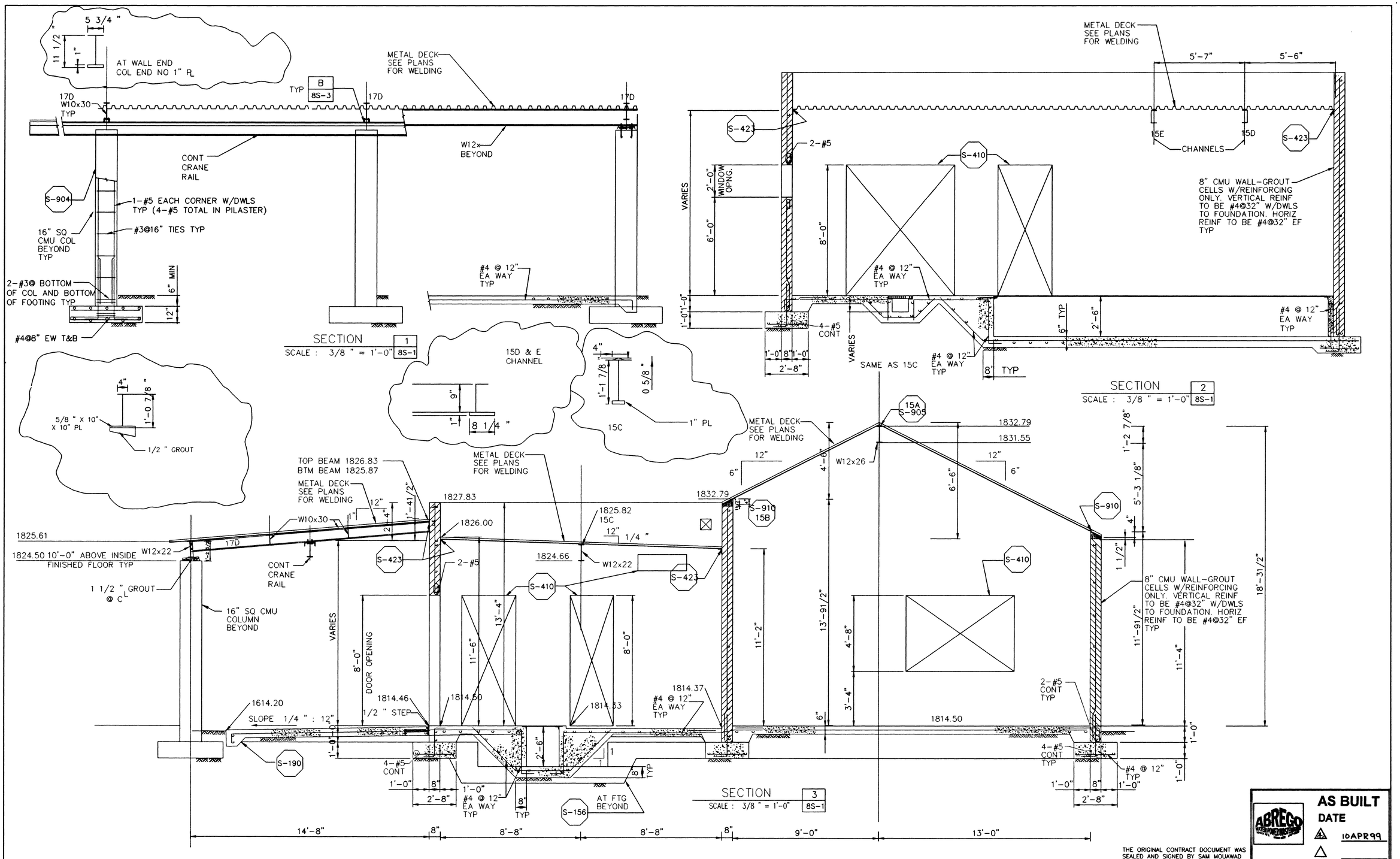

THE ORIGINAL CONTRACT DOCUMENT WAS SEALED AND SIGNED BY SAM MOUAWAD

AS BUILT
DATE
4 10APR99
△

REV	DATE	BY	DESCRIPTION

SCALE:

WARNING
0 1/2 1
IF THIS BAR DOES NOT MEASURE 1" THEN DRAWING IS NOT TO SCALE.

DESIGNED
DRAWN
CHECKED C. LEE

SUBMITTED THE ORIGINAL CONTRACT DOCUMENT WAS SIGNED BY SAM MOUAWAD
PROJECT ENGINEER R. C. E. NO. DATE
RECOMMENDED THE ORIGINAL CONTRACT DOCUMENT WAS SIGNED BY VICKI J SCHARNHORST
MONTGOMERY WATSON R. C. E. NO. DATE

MONTGOMERY WATSON
Las Vegas, Nevada

MONTGOMERY WATSON
3014 WEST CHARLESTON BLVD
LAS VEGAS, NV. 89102-1944
(702) 878-8010

COPYRIGHT © 1996 BY MONTGOMERY WATSON
ALL RIGHTS RESERVED

CITY OF LAS VEGAS
BONANZA/MOJAVE WATER RESOURCE CENTER
CONTROL BUILDING
SECTIONS

DWG. 69
8S-2
513-64

DATE/TIME DD-MMM-YYYY HH:MM
FILE No. p:\proj\vwr\str\bzm0*s*.dgn
JOB No.

26312