AS BUILT
DATE
2 31 APR 99
1

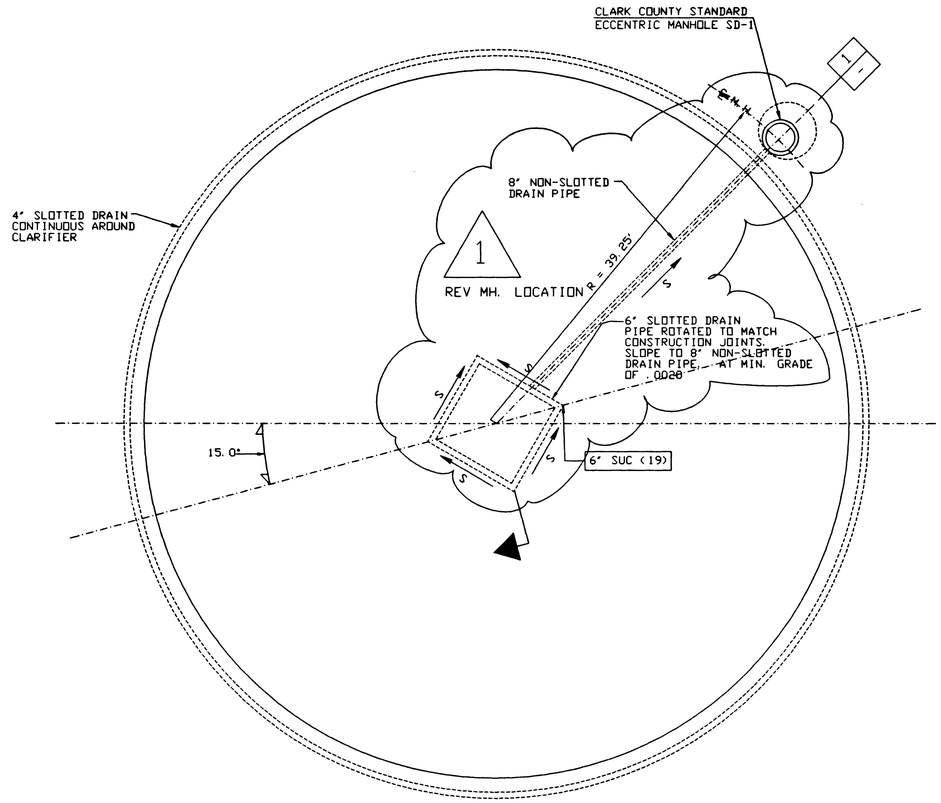

CLARIFIER UNDERDRAIN PLAN

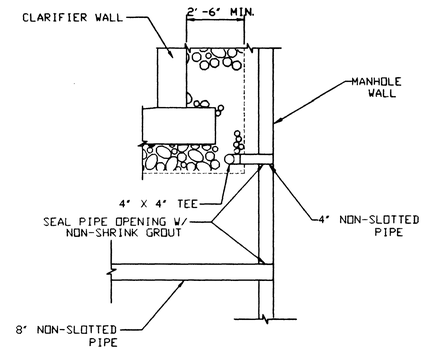

DETAIL A
-

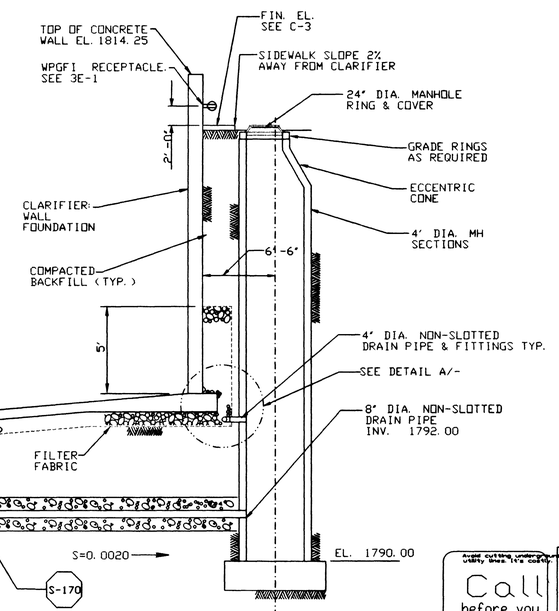

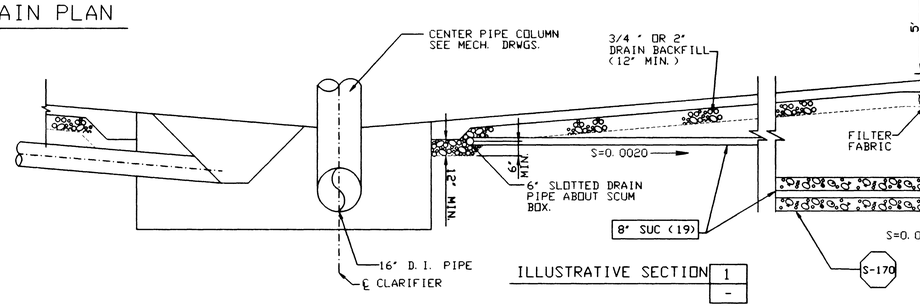

ILLUSTRATIVE SECTION 1
-

N

Call before you Dig
1-800-227-2600

REGISTERED PROFESSIONAL ENGINEER STATE OF NEVADA
BEN EMERSON CIVIL
No 9422

THE ORIGINAL CONTRACT DOCUMENT WAS SEALED AND SIGNED BY BEN EMERSON

REV	DATE	BY	DESCRIPTION

SCALE: NONE

WARNING 0 1/2 1 — IF THIS BAR DOES NOT MEASURE 1" THEN DRAWING IS NOT TO SCALE.

DESIGNED S. McCLELLAND
DRAWN S. McCLELLAND
CHECKED B. EMERSON

SUBMITTED THE ORIGINAL CONTRACT DOCUMENT WAS SIGNED BY BEN EMERSON
PROJECT ENGINEER R. C. E. NO. DATE
RECOMMENDED THE ORIGINAL CONTRACT DOCUMENT WAS SIGNED BY VICKI J SCARNHORST
MONTGOMERY WATSON R. C. E. NO. DATE

MONTGOMERY WATSON
Las Vegas, Nevada

MONTGOMERY WATSON
3014 WEST CHARLESTON BLVD
LAS VEGAS, NV. 89102-1944
(702) 878-8010

COPYRIGHT © 1997 BY MONTGOMERY WATSON
ALL RIGHTS RESERVED

CITY OF LAS VEGAS
BONANZA/MOJAVE WATER RESOURCE CENTER
MISCELLANEOUS CIVIL DETAILS-3

DWG. GC-4
513-64

JOB No. 540.0131 FILE No. $$$$$$$$$$directory/filename$$$$$$$$$$
DATE/TIME $$$$date$$$$$$$$time$$

26255