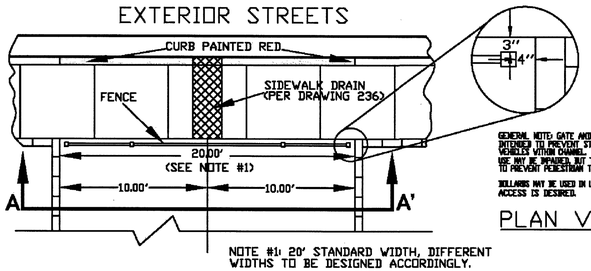

GENERAL NOTE: GATE AND FENCE CONSTRUCTION IS INTENDED TO PREVENT STORAGE OF MATERIALS AND VEHICLES WITHIN CHANNEL. PREVENTION OF PEDESTRIAN USE MAY BE DISPARATE, BUT THE DESIGN IS NOT INTENDED TO PREVENT PEDESTRIAN TRAFFIC.

BOLLARDS MAY BE USED IN LIEU OF GATE IF PEDESTRIAN ACCESS IS DESIRED.

PLAN VIEW

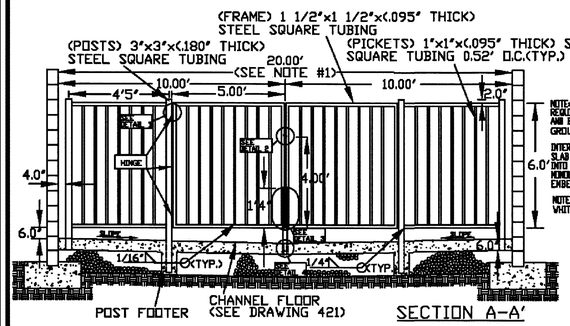

NOTE: POSTS PLACED IN HARDENED CONCRETE REQUIRE AN 8"Ø CORING THROUGH THE SLAB AND BASE FULLY GROUTED WITH HIGH STRENGTH GROUT.

INTERIOR POSTS POURED MONOLITHIC WITH THE SLAB SHALL BE EMBEDDED A MINIMUM OF 18" INTO A 24"Ø24" FOOTER. END POSTS POURED MONOLITHIC WITH THE SLAB SHALL HAVE FULL EMBEDMENT IN THE SLAB.

NOTE: STEEL WILL BE PRIMERED AND PAINTED WHITE UNLESS OTHERWISE SPECIFIED.

SECTION A-A'

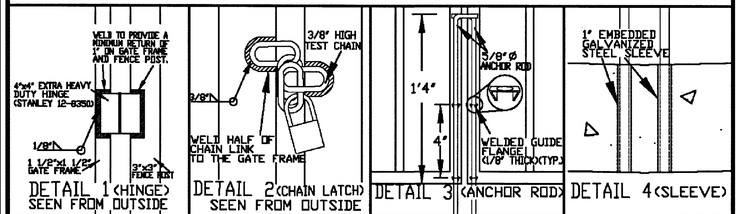

SPECIFICATION REFERENCE	

UNIFORM STANDARD DRAWINGS
CLARK COUNTY AREA

CITY OF LAS VEGAS ONLY
THRU-LOT DRAIN
(DETAIL FOR FENCE)
NOT FOR USE IN EMERGENCY ACCESS

DATE 03-07-02 | DWG. NO. 421 B | PAGE NO. 120 C

APPROXIMATE PIPELINE STATIONING OF TEST STATIONS		
DWG NO	STATION	ADDITIONAL WIRE

NOTES:

1. USE ONLY NATIVE SOIL FREE OF ROCKS AND CLODS FOR BACKFILL AROUND CELLS WITH A MINIMUM OF 5 GALS OF WATER SATURATION DURING INSTALLATION. DO NOT USE SAND AS BACKFILL.
2. SUPPLY ENOUGH WIRE FROM EACH LEAD TO REACH FULL EASEMENT WIDTH PLUS FIVE (5) ADDITIONAL FEET. COIL WIRE IN BOTTOM OF BOX. (200' MAX.)
   BLACK WIRE – CASING
   WHITE WIRE – DIP PIPELINE
3. TEST STATION PLACEMENT TO BE PERPENDICULAR TO PIPE, AT INTERSECTIONS, TEST STATION WIRES TO BE PLACED PARALLEL TO PIPE FOR PLACEMENT PERPENDICULAR TO PIPE AFTER ROAD EASEMENT RADIUS. PLACE IN SIDEWALK OR TO BE COLLARED
4. STANDARD CASING PER UDACS PLATE 23 w/ ANNULAR SPACE FILLED WITH CLASS I CLSM PIPE TO BE TYPE 53 DIP RESTRAINED FULL LENGTH, AND DOUBLE WRAPPED
5. DIP PIPE JOINT BONDING PER DETAIL PL12-9 AND BELOW

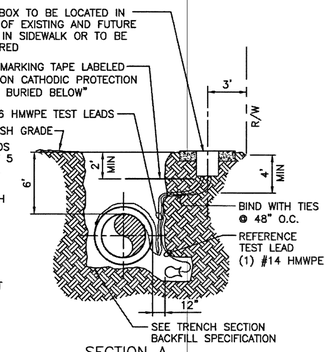

SECTION A

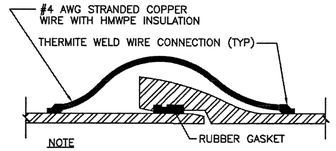

NOTE
INSTALL TWO BOND WIRES AT EACH PIPE JOINT.

DIP JOINT BOND

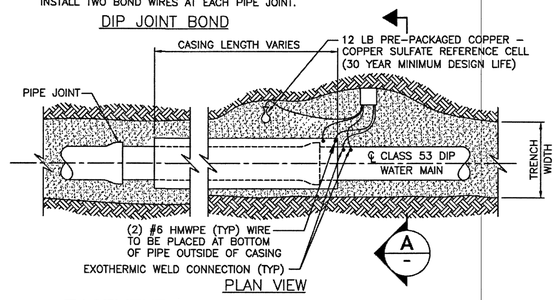

PLAN VIEW

EASEMENT / COMMON ELEMENT DETAIL
TYPE "C" TEST STATION WITHOUT ANODES
NOT TO SCALE

GENERAL NOTES

PL12-10 062007

1. ALL TEST LEADS AND ANODE LEADS SHALL BE ATTACHED TO THE STEEL CYLINDER OF THE PIPE BY MEANS OF A "CADWELD" EXOTHERMIC WELD.
2. ALL TEST LEADS AND ANODE LEADS SHALL BE ATTACHED TO EITHER THE PIPELINE'S BELL END, SPIGOT END OR PLAIN END AS SHOWN ON THE DRAWING.
3. ALL EXPOSED PORTIONS OF THE EXOTHERMIC WELD AND COPPER CABLE CONDUCTORS SHALL BE COATED WITH A SCOTCHCOAT 4 INSULATING RESIN PRIOR TO PLACING GROUT AROUND THE PIPELINE JOINT.
4. ALL TEST LEADS AND ANODE LEADS SHALL BE RUN WITHOUT SPLICES FROM THE CONNECTION AT THE PIPE TO THE CONNECTION AT THE TEST STATION BOX.
5. ALL TEST LEADS AND ANODE TEST LEADS INSIDE THE TEST BOX SHALL BE BUNDLED TOGETHER AT 8 INCH INTERVALS WITH NYLON CABLE TIES. ALL TEST STATION LEADS SHALL BE PROVIDED WITH SUFFICIENT SLACK SO THAT THE TEST BOARD MAY BE EXTENDED A MINIMUM OF 4 FEET ABOVE THE TEST BOX.
6. ALL TEST LEADS AND ANODE LEADS (WIRE INSULATION) ARE COLOR CODED AS FOLLOWS:

TEST STATION LEADS FROM PIPE	– WHITE
REFERENCE CELL TEST LEADS	– RED
ANODE TEST LEADS	– GREEN
200' TEST LEAD	– BLUE
FOREIGN PIPE LEAD	– YELLOW
CASING	– BLACK

ALL TEST LEADS AND ANODE LEADS SHALL BE COLOR CODED WITH COLORED WIRE INSULATION. COLORED TAPING NOT PERMITTED (TYP)

7. ALL TEST LEADS AND ANODE LEADS SHALL BE CONNECTED TO THE BRASS BOLTS ON THE TEST BOARD WITH SOLDERLESS SCREW TIGHT COPPER LUG CONNECTORS OR PRESSURE TERMINAL CONNECTORS. ALL FASTENERS (SCREWS, LUGS) SHALL BE BRASS OR COPPER.
8. ALL TEST LEADS AND ANODE TEST LEADS SHALL HAVE A MINIMUM OF 4" OF SLACK NEAR THE PIPE JOINT TO PREVENT DAMAGE DURING THE BACKFILL OPERATION.
9. ALL TEST LEADS AND ANODE TEST LEADS SHALL BE PLACED ALONG THE SIDE AND BELOW THE SPRINGLINE OF THE PIPE.
10. DUAL TEST STATIONS - LABEL ALL WIRES TO DISTINGUISH.
11. CABLE ASSEMBLIES SHALL BE USED WHEN PRACTICAL.
12. TEST STATION PLACEMENT TO BE PERPENDICULAR TO PIPE. AT INTERSECTIONS TEST STATION WIRES TO BE PLACED PARALLEL TO PIPE FOR PLACEMENT PERPENDICULAR TO PIPE AFTER ROAD EASEMENT RADIUS.
13. PRE-PACKAGED ANODES SHALL HAVE 6" LIFT OF COMPACTED NATIVE BACKFILL. AFTER BACKFILL IS IN PLACE, SATURATE THE AREA WITH TEN (10) GALLONS MINIMUM OF WATER. AFTER ALL WATER HAS BEEN ABSORBED CONTINUE BACKFILLING.

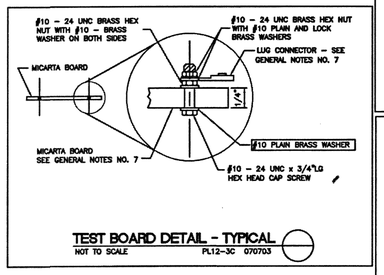

TEST BOARD DETAIL – TYPICAL
NOT TO SCALE PL12-3C 070703

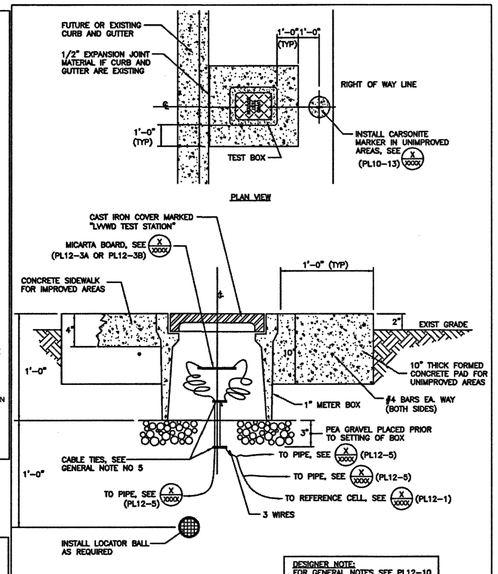

TEST BOX DETAIL – TYPICAL
NOT TO SCALE PL12-2 091408

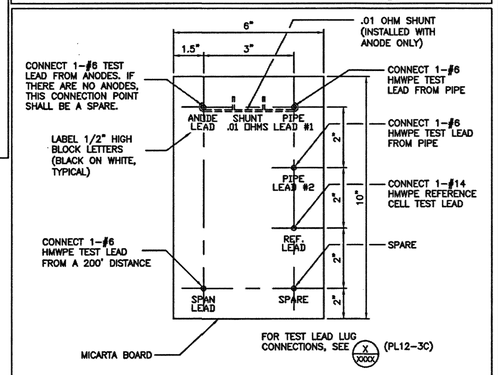

STANDARD TEST BOARD INSTALLATION
NOT TO SCALE PL12-3A 062007

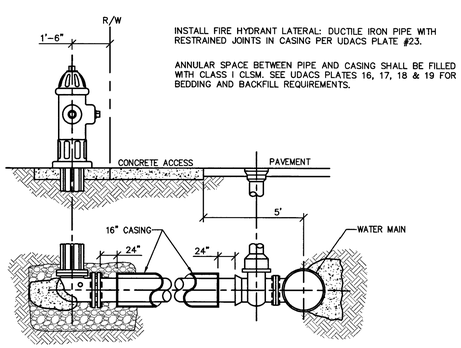

1. INSTALL FIRE HYDRANT ASSEMBLY PER UDACS PLATE #40
2. INSTALL 16" CASING 2' FROM VALVE TO 2' FROM 90° BEND PER UDACS PLATE #23
3. BACKFILL WITH CLSM (CLASS I) IN DIRT AREA

C/15 FIRE HYDRANT LATERAL CASING
(NOT TO SCALE)

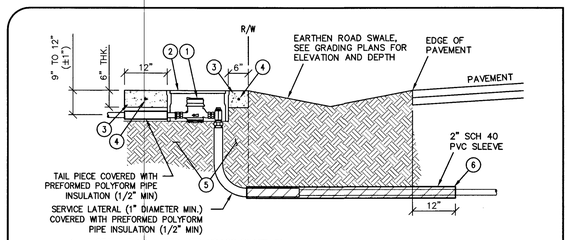

1. INSTALL 3/4" METER PER UDACS PLATE #4
2. INSTALL ARMORCAST 1" METER BOX ASSY (P6000485T/A6000484T) OR APP. EQUAL
3. 6" THICK FORMED CONCRETE COLLAR
4. #4 REBAR, 2" FROM BOTTOM, CENTERED WITHIN EACH SIDE OF COLLAR, 4" MIN. LAP.
5. 6" MIN. TYPE II AGGREGATE BASE COMPACTED TO 95% MAX. DENSITY ON ALL SIDES AND UNDER METER BOX

B/15 SERVICE SADDLE AND METER COLLAR @ EARTHEN SWALE
(NOT TO SCALE)

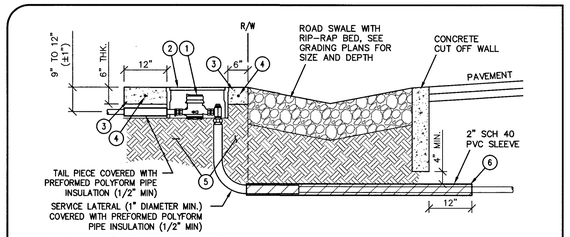

1. INSTALL 3/4" METER PER UDACS PLATE #4
2. INSTALL ARMORCAST 1" METER BOX ASSY (P6000485T/A6000484T) OR APP. EQUAL
3. 6" THICK FORMED CONCRETE COLLAR
4. #4 REBAR, 2" FROM BOTTOM, CENTERED WITHIN EACH SIDE OF COLLAR, 4" MIN. LAP.
5. 6" MIN. TYPE II AGGREGATE BASE COMPACTED TO 95% MAX. DENSITY ON ALL SIDES AND UNDER METER BOX
6. 2" SCHEDULE 40 PVC SLEEVE, 4" MIN. SEPARATION BETWEEN SLEEVE & BOTTOM OF CUT OFF WALL, 12" EACH SIDE

A/15 SERVICE SADDLE AND METER COLLAR W/ CUT-OFF WALL & RIP-RAP
(NOT TO SCALE)

APPROVALS

LAS VEGAS FIRE AND RESCUE — DATE 10/18/16

APPROVED FOR CONSTRUCTION

LAS VEGAS VALLEY WATER DISTRICT ENGINEERING SERVICES MANAGER

DATE: 11/01/16 PROJECT No.: 122399

NO.	DESCRIPTION	DATE	APP'D

DATE : 10/18/2016
PM : J. PEARCE
DRAWN BY :
DESIGNED BY :
CHECKED BY :
ADA CHECKED :
JOB NO. : 007.070
SCALE : 1" = 30'

Triton Engineering
6757 W. Charleston Blvd.
Suite B
Las Vegas, Nevada 89146
Office: (702) 254-1480
Fax: (702) 254-3062
www.tritonengineering.com

DR HORTON
AZURE & EULA
UTILITY DETAILS

PROFESSIONAL ENGINEER – STATE OF NEVADA
JAMES M. PEARCE
Exp. 12-31-17
CIVIL
No. 9552
10-18-16

SHEET 15 OF 17
C.L.V. DWG.# 63459

HTE#16-35402

10745045

Q:\Triton Drawings\007.070 Bloom 10\Drawings\Improvements\007.070_13-Utilities.dwg dreese Tue, 18 Oct 2016 – 10:23am