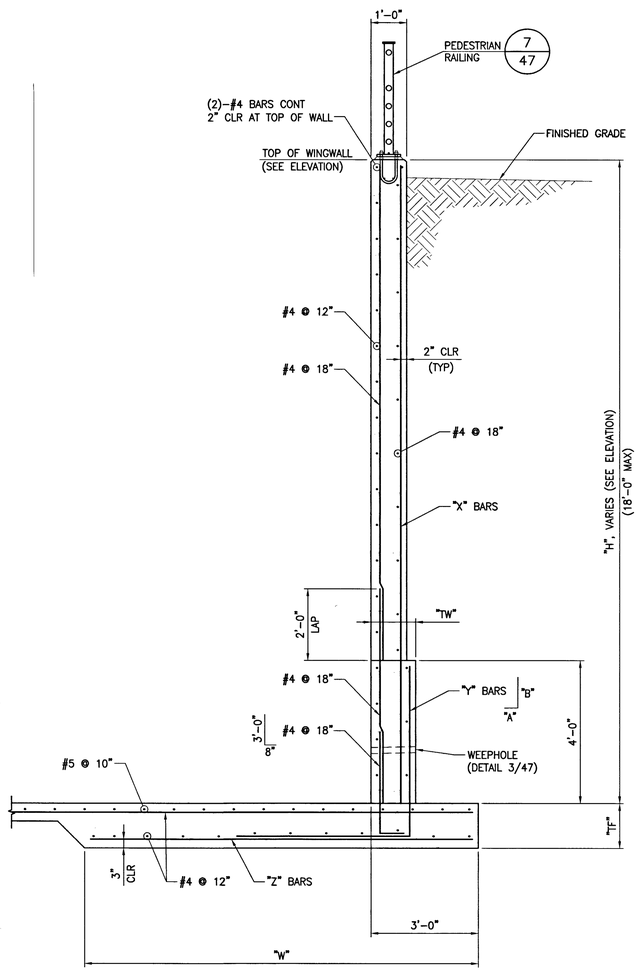

DIMENSIONS				"X"	"Y"	"Z"	"A"	"B"
H	W	TW	TF	BARS	BARS	BARS		
≤ 6'-0"	4'-0"	1'-0"	1'-0"	#4 @ 9"	#4 @ 9"	#4 @ 9"	8"	2'-9"
≤ 8'-0"	5'-6"	1'-0"	1'-0"	#4 @ 9"	#5 @ 9"	#4 @ 9"	10"	3'-3"
≤ 10'-0"	7'-0"	1'-0"	1'-0"	#4 @ 6"	#5 @ 6"	#4 @ 6"	10"	3'-3"
≤ 12'-0"	8'-3"	1'-0"	1'-0"	#4 @ 6"	#6 @ 6"	#5 @ 6"	12"	3'-9"
≤ 14'-0"	9'-6"	1'-3"	1'-3"	#5 @ 6"	#7 @ 6"	#5 @ 6"	4'-10"	4'-10"
≤ 16'-0"	10'-6"	1'-3"	1'-3"	#6 @ 6"	#8 @ 6"	#6 @ 6"	4'-10"	4'-10"
≤ 18'-0"	12'-0"	1'-3"	1'-3"	#7 @ 6"	#9 @ 6"	#7 @ 6"	4'-10"	4'-10"

C TYPICAL OUTLET WALL SECTION
SCALE: 1/2" = 1'-0"

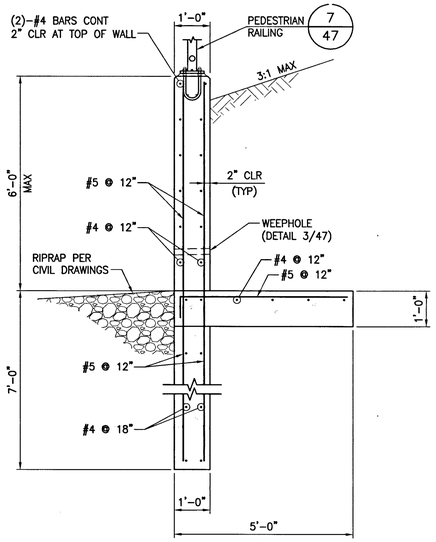

D TYPICAL WINGWALL SECTION
SCALE: 1/2" = 1'-0"

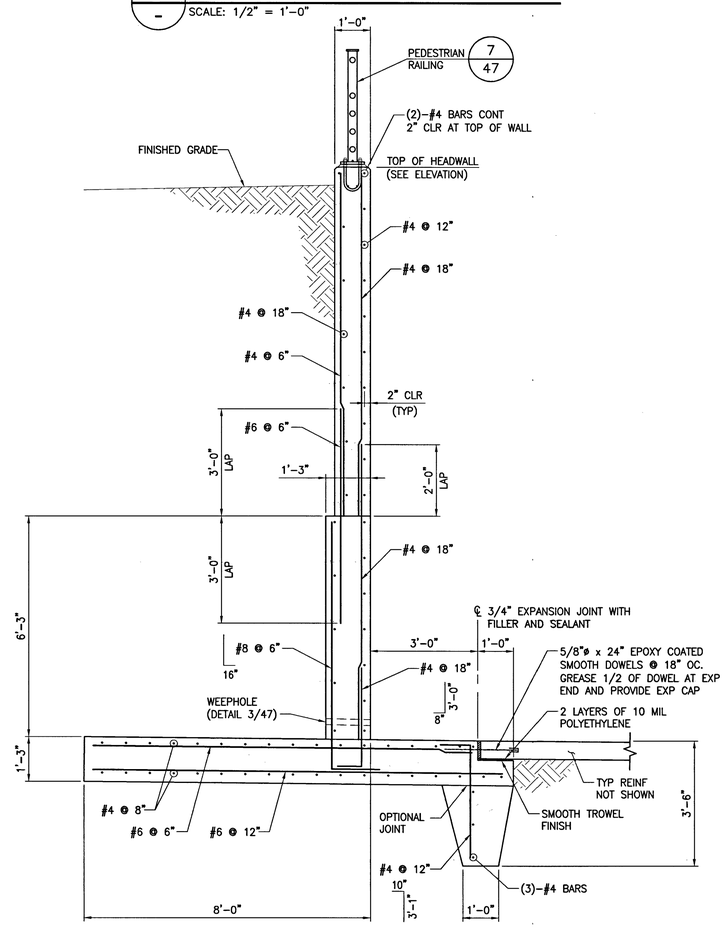

B WALL SECTION AT OUTLET
SCALE: 1/2" = 1'-0"

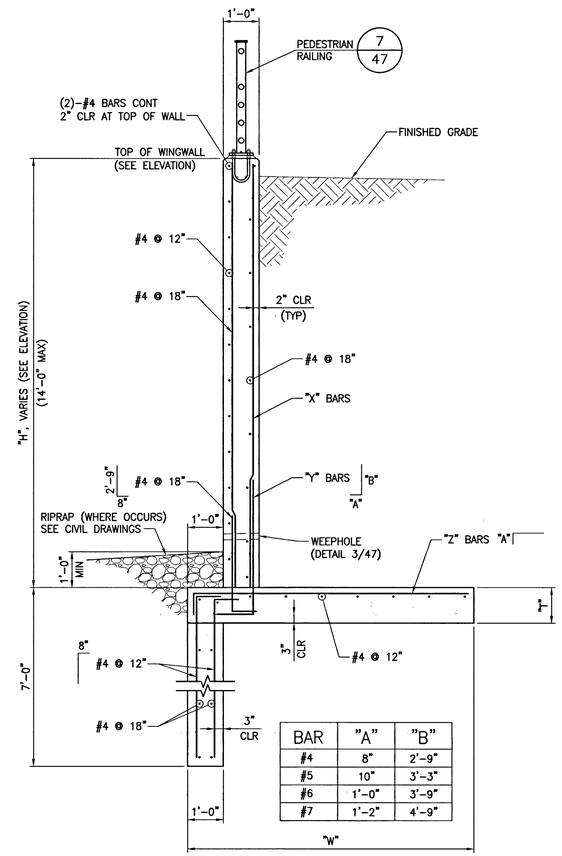

BAR	"A"	"B"
#4	8"	2'-9"
#5	10"	3'-3"
#6	1'-0"	3'-9"
#7	1'-2"	4'-9"

WINGWALL SCHEDULE ("H" ≤ 14'-0")					
DIMENSIONS			"X"*	"Y"	"Z"
H	W	T	BARS	BARS	BARS
≤ 4'-0"	3'-0"	1'-0"	#4 @ 12"	#4 @ 12"	#4 @ 12"
≤ 6'-0"	4'-0"	1'-0"	#4 @ 9"	#4 @ 9"	#4 @ 9"
≤ 8'-0"	5'-0"	1'-0"	#4 @ 9"	#5 @ 9"	#4 @ 9"
≤ 10'-0"	6'-0"	1'-0"	#4 @ 6"	#5 @ 6"	#4 @ 6"
≤ 12'-0"	8'-0"	1'-0"	#4 @ 6"	#6 @ 6"	#5 @ 6"
≤ 14'-0"	9'-6"	1'-3"	#5 @ 6"	#7 @ 6"	#7 @ 6"

* "X" BARS MAY BE ELIMINATED BY EXTENDING THE "Y" BARS TO THE TOP OF THE RETAINING WALL.

A TYPICAL WINGWALL SECTION
SCALE: 1/2" = 1'-0"

STATE OF NEVADA
ERIC G. GILES
Exp. 06/30/2017
STRUCTURAL
No. 14570
PROFESSIONAL ENGINEER

DATE: 12/09/2015

REV	DATE	DESCRIPTION	DATE	AGEN APP	DATE	GOV APP

PROJECT NO. 62024-222
DESIGN: GCW
DRAWN: GCW
CHECK: EJJ
PLOT DATE: 12-09-15
PLOT TIME: 21:07:19

G.C. WALLACE COMPANIES
ENGINEERS | PLANNERS | SURVEYORS
1555 S. RAINBOW BLVD - LAS VEGAS NV 89146
T: 702.364.1000 F: 702.364.1299 GCWALLACE.COM
LAS VEGAS

F:\Projects\600\62024-222\DWG\Production\24CB2c51_SC5.dwg
Paul Brennard

THE HOWARD HUGHES COMPANY, LLC

VILLAGE 24 - CROSSBRIDGE DRIVE UNIT 2
IMPROVEMENT PLANS

DRAINAGE CORRIDOR STRUCTURAL DETAILS 4

DRAWING
H#62303
10746535
51
51 OF 53 SHTS

SID NO. 812 PROJECT 9A, 9B AND 10A

cwp24JB.dwg 070303.jpg