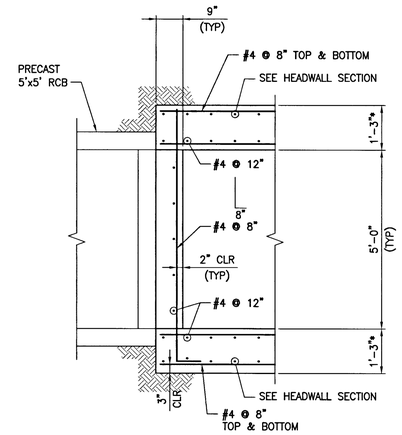

* DOWNSTREAM HEADWALL SHOWN.
THICKNESS AT UPSTREAM HEADWALL = 1'-0".

B SECTION
SCALE: 1/2" = 1'-0"

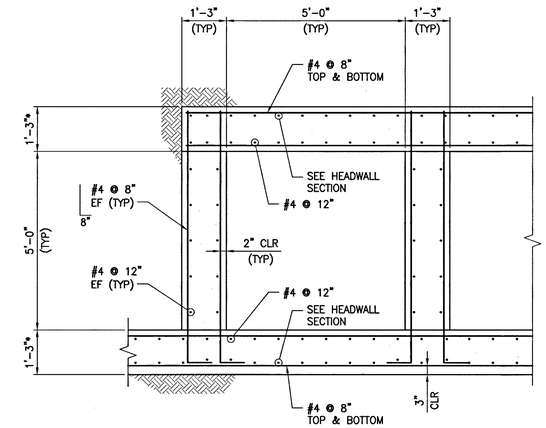

* DOWNSTREAM HEADWALL SHOWN.
THICKNESS AT UPSTREAM HEADWALL = 1'-0".

A SECTION
SCALE: 1/2" = 1'-0"

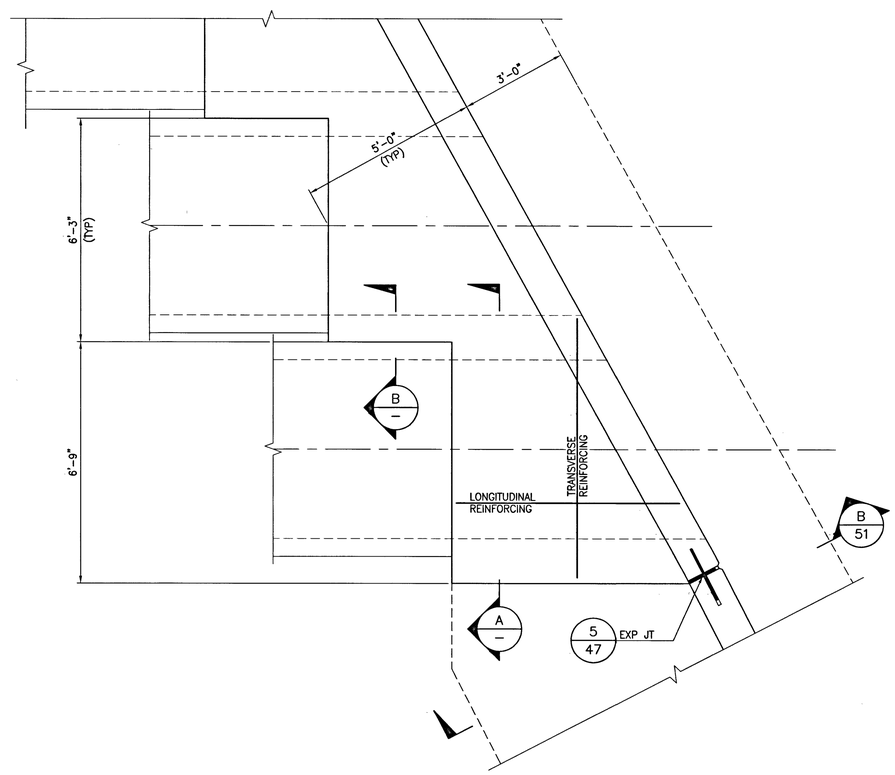

2 JUNCTION TOP SLAB PLAN
SCALE: 1/2" = 1'-0"

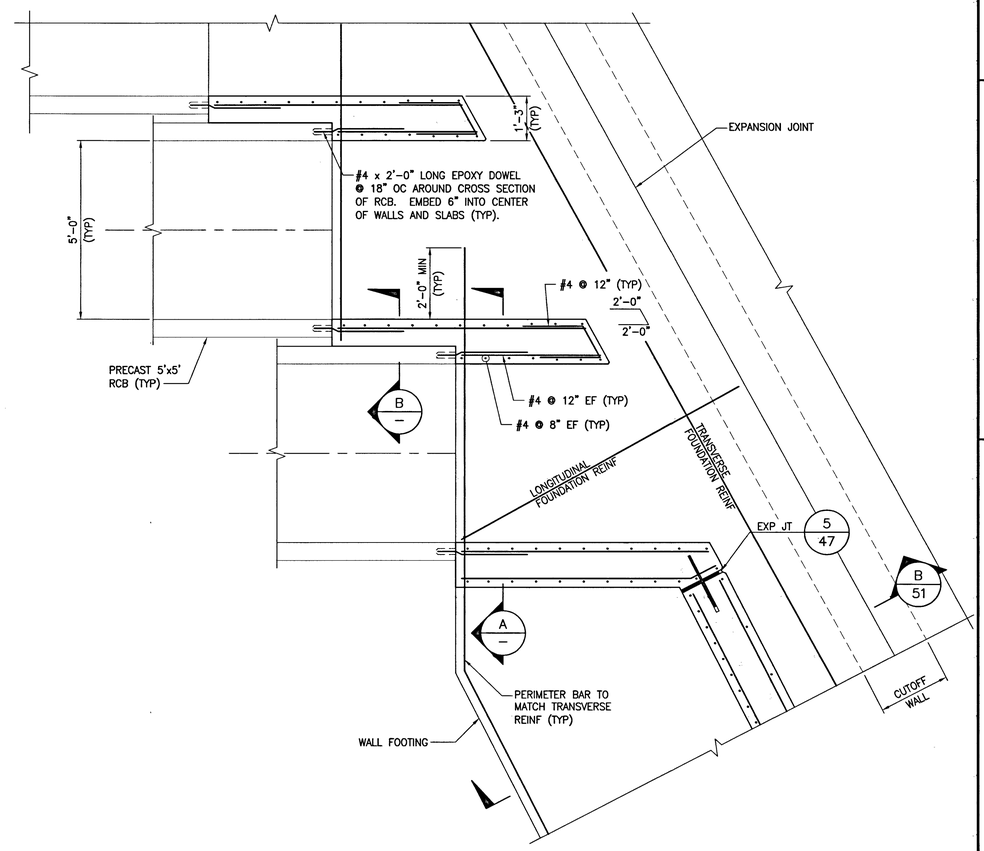

1 JUNCTION FOUNDATION PLAN
SCALE: 1/2" = 1'-0"

STATE OF NEVADA
PROFESSIONAL ENGINEER
ERIC J. GILES
Exp. 06/30/2017
CIVIL
STRUCTURAL
No. 14570

DATE: 12/09/2015

REV	DATE	DESCRIPTION	DATE	AGEN APP	DATE	GCW APP

PROJECT NO. 62024-222

DESIGN: GCW
DRAWN: GCW
CHECK: EJ
PLOT DATE: 12-09-15
PLOT TIME: 21:07:05

G.C. WALLACE COMPANIES
ENGINEERS | PLANNERS | SURVEYORS
1555 S. RAINBOW BLVD - LAS VEGAS, NV 89146
T: 702.804.2000 - F: 702.804.2299 - GCWALLACE.COM

LAS VEGAS

F:\Projects\600\62024-222\DWG\Production\24CB2c50_SC4.dwg
Paul Brennard

THE HOWARD HUGHES COMPANY, LLC

VILLAGE 24 - CROSSBRIDGE DRIVE UNIT 2
IMPROVEMENT PLANS

DRAINAGE CORRIDOR STRUCTURAL DETAILS 3

DRAWING
50
50 OF 53 SHTS

H#62303
10746535

SID NO. 812 PROJECT 9A, 9B AND 10A

pw24c50.dwg 07/20/15 jpv