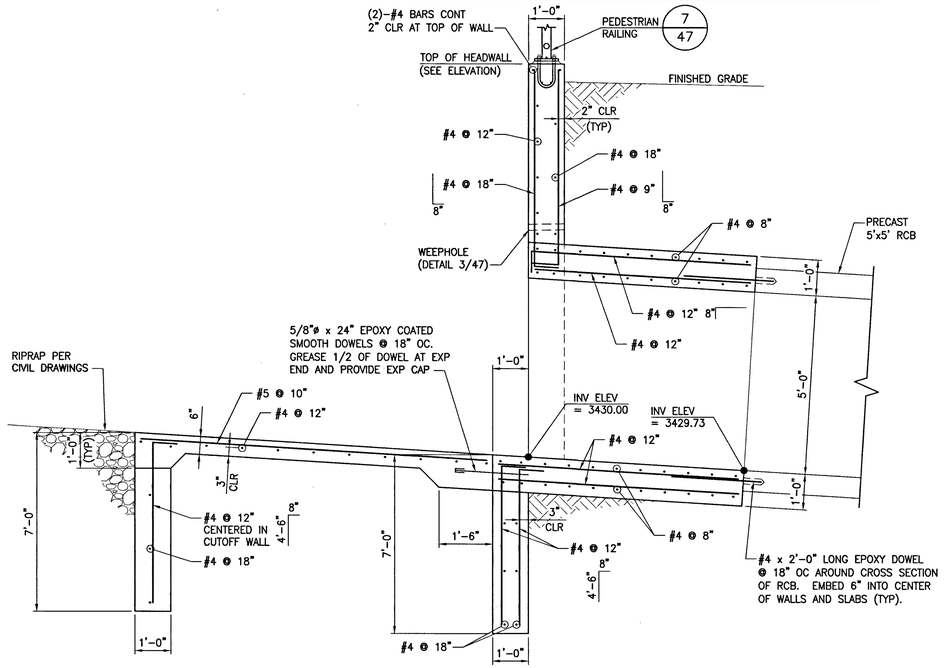

B UPSTREAM HEADWALL SECTION

SCALE: 1/2" = 1'-0"

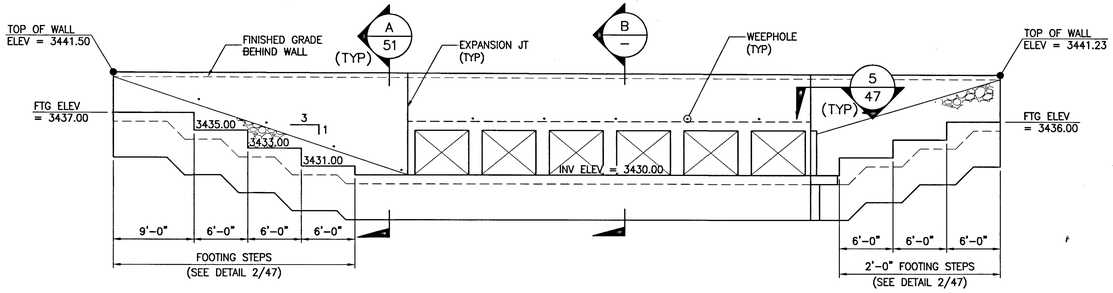

3 UPSTREAM HEADWALL ELEVATION

SCALE: 1/8" = 1'-0"

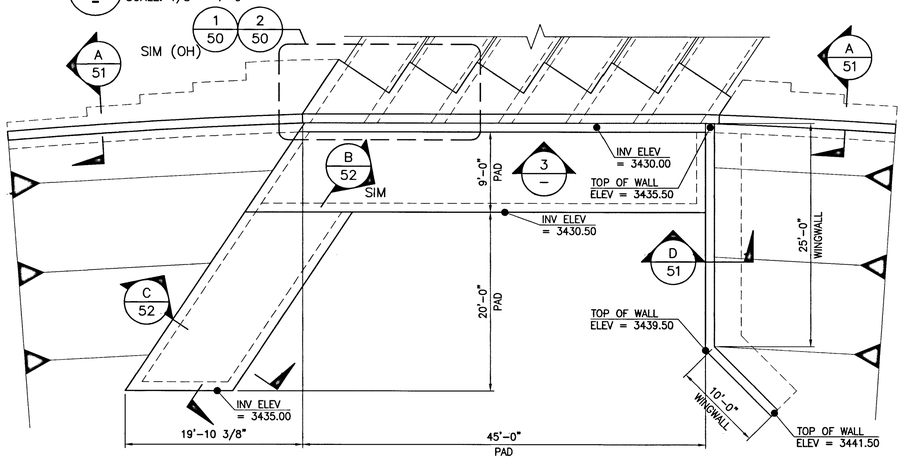

2 UPSTREAM HEADWALL ENLARGED PLAN

SCALE: 1/8" = 1'-0"

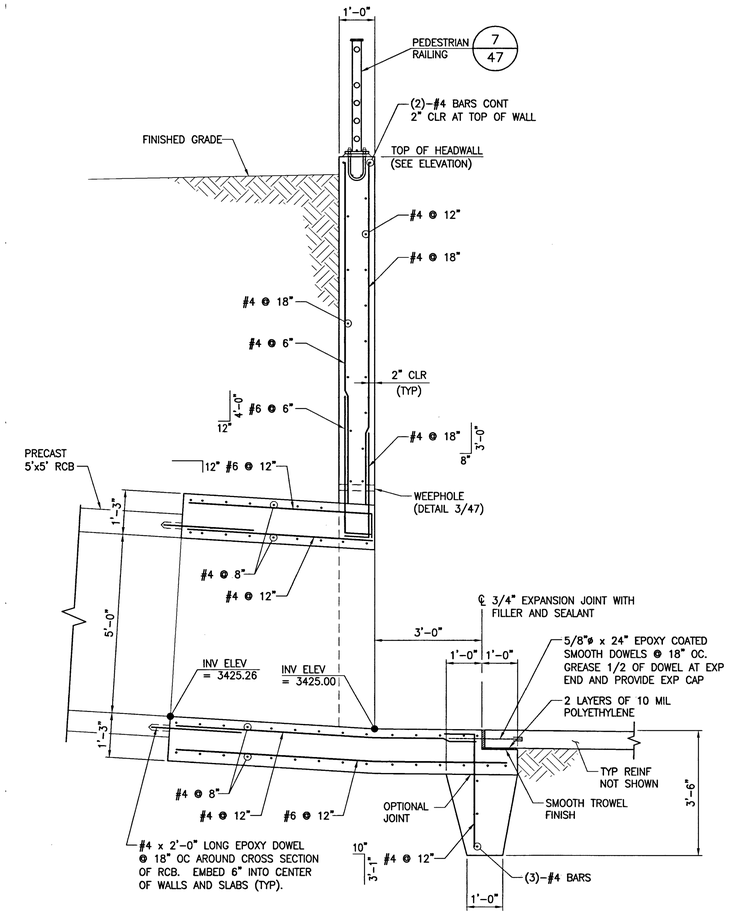

A DOWNSTREAM HEADWALL SECTION

SCALE: 1/2" = 1'-0"

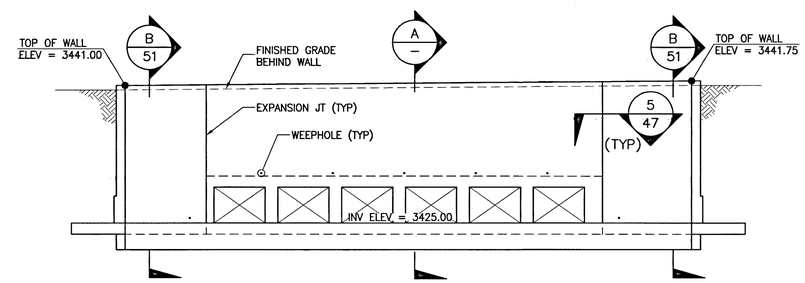

1 DOWNSTREAM HEADWALL ELEVATION

SCALE: 1/8" = 1'-0"

STATE OF NEVADA
ERIC G. GILES
Exp. 06/30/2017
STRUCTURAL
No. 14570
PROFESSIONAL ENGINEER

REV	DATE	DESCRIPTION	DATE	AGEN APP	DATE	GCW APP	DATE

DATE: 12/09/2015

PROJECT NO.
62024-222

DESIGN: GCW
DRAWN: GCW
CHECK: AJJ
PLOT DATE: 12-09-15
PLOT TIME: 21:06:52

G.C. WALLACE COMPANIES
ENGINEERS | PLANNERS | SURVEYORS
5555 S. RAINBOW BLVD - LAS VEGAS, NV 89118
T: 702.804.2000 F: 702.804.2299 GCWALLACE.COM

LAS VEGAS

F:\Projects\600\62024-222\DWG\Production\24x36z-v9_SC3.dwg
Paul Bremard

THE HOWARD HUGHES COMPANY, LLC

VILLAGE 24 - CROSSBRIDGE DRIVE UNIT 2
IMPROVEMENT PLANS

DRAINAGE CORRIDOR STRUCTURAL DETAILS 2

DRAWING
H#62303
10706535
49
49 OF 53 SHTS

SID NO. 812 PROJECT 9A, 9B AND 10A