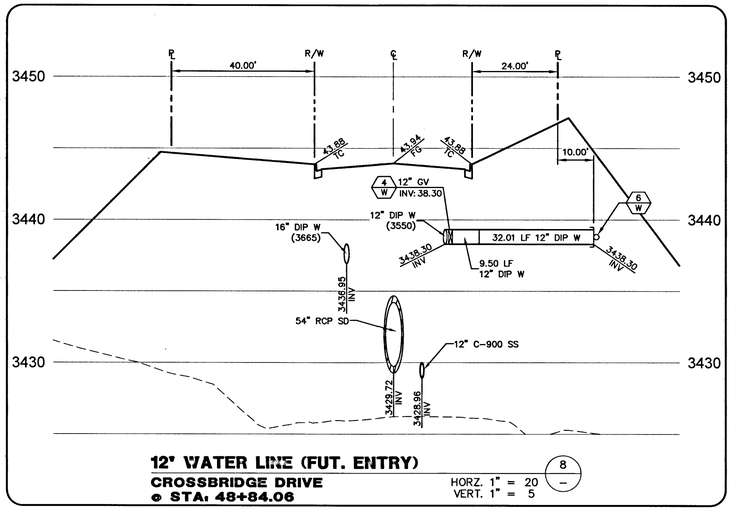

12" WATER LINE (FUT. ENTRY)

CROSSBRIDGE DRIVE
@ STA: 48+84.06

HORZ. 1" = 20
VERT. 1" = 5

8 –

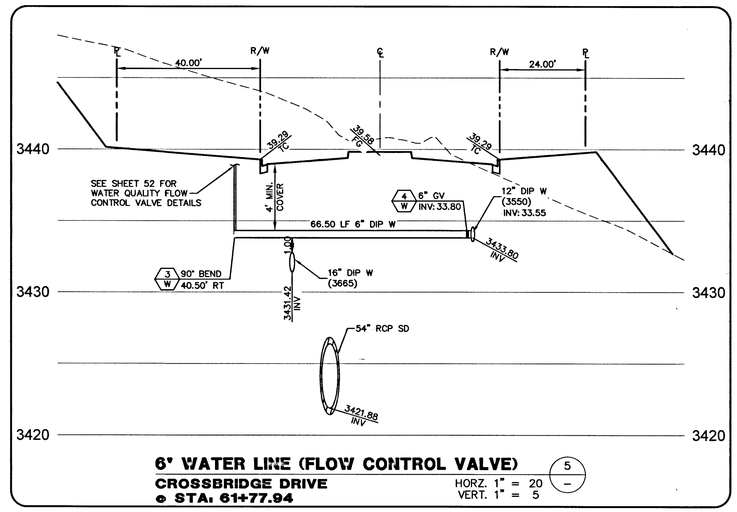

6" WATER LINE (FLOW CONTROL VALVE)

CROSSBRIDGE DRIVE
@ STA: 61+77.94

HORZ. 1" = 20
VERT. 1" = 5

5 –

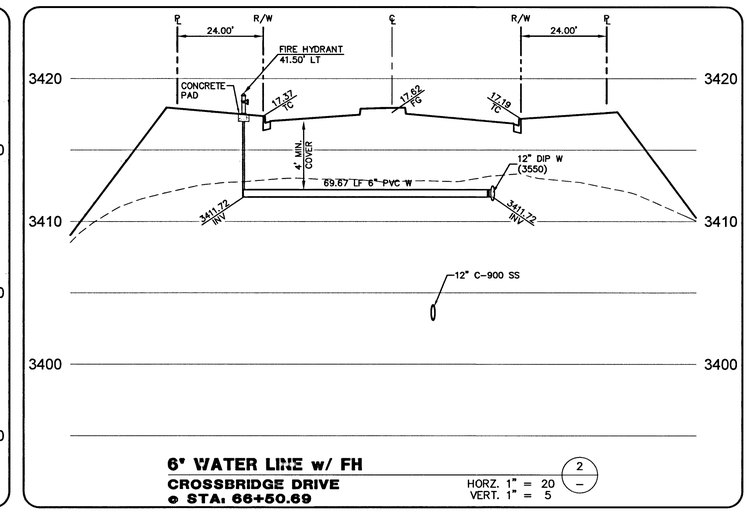

6" WATER LINE w/ FH

CROSSBRIDGE DRIVE
@ STA: 66+50.69

HORZ. 1" = 20
VERT. 1" = 5

2 –

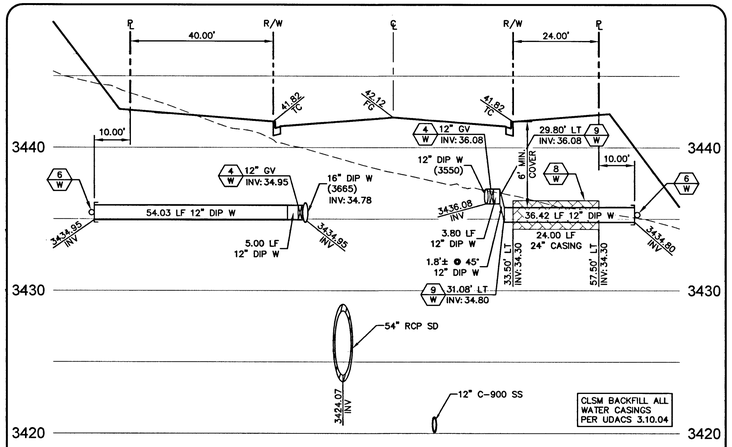

12" WATER LINE (2) (FUT. ENTRY)

CROSSBRIDGE DRIVE
@ STA: 58+19.15

HORZ. 1" = 20
VERT. 1" = 5

7 –

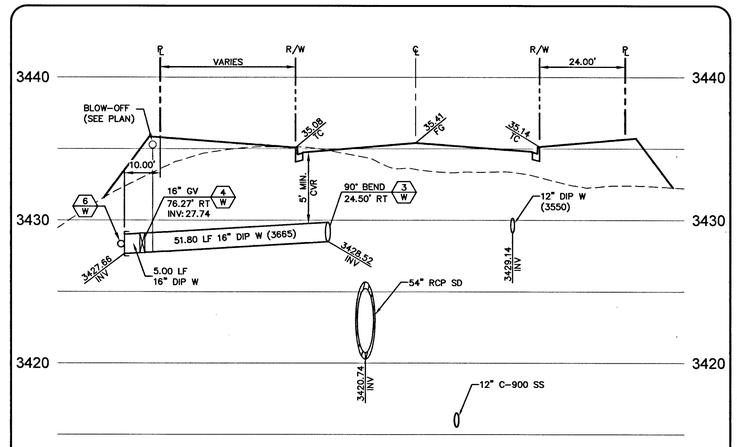

16" WATER MAIN (FUT. ENTRY)

CROSSBRIDGE DRIVE
@ STA: 63+37.00

HORZ. 1" = 20
VERT. 1" = 5

4 –

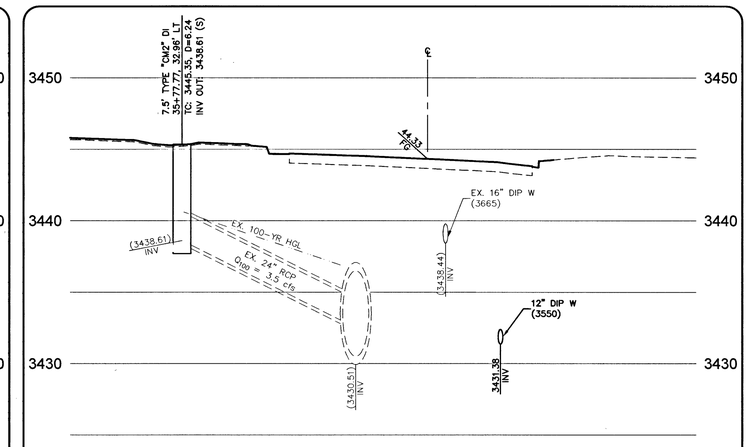

EX. 24" STORM DRAIN & DI

SUNCREEK ROAD
@ STA: 10+36.54 (= 36+43.14)

HORZ. 1" = 20
VERT. 1" = 5

1 –

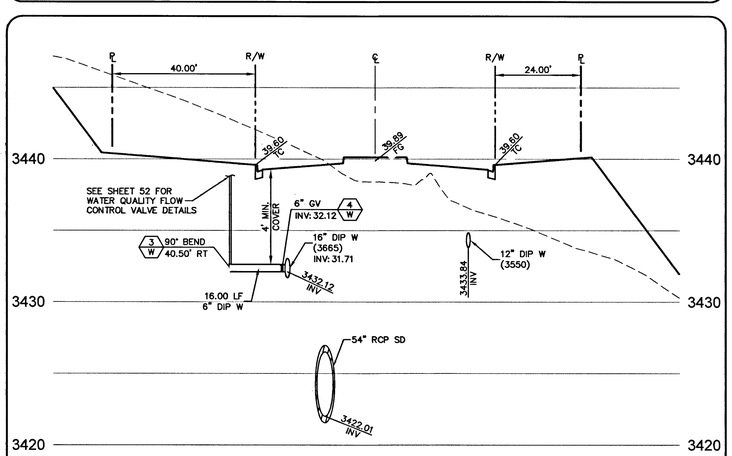

6" WATER LINE (FLOW CONTROL VALVE)

CROSSBRIDGE DRIVE
@ STA: 61+57.13

HORZ. 1" = 20
VERT. 1" = 5

6 –

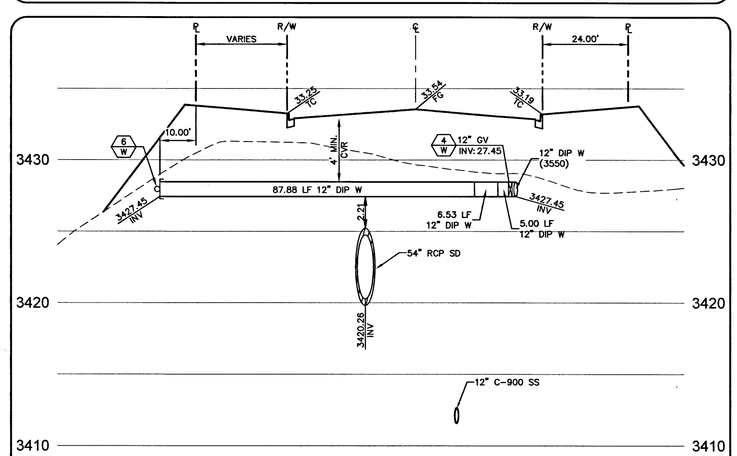

12" WATER LINE (FUT. ENTRY)

CROSSBRIDGE DRIVE
@ STA: 63+84.51

HORZ. 1" = 20
VERT. 1" = 5

3 –

DROP INLET NOTE

WHERE 10 FEET PARALLEL SEPARATION IS NOT PRACTICABLE:

CAST-IN-PLACE MONOLITHIC POUR WITH WATERSTOP BETWEEN SLAB AND WALLS. BASE, WALLS AND TOP TO BE CONSTRUCTED WITH WATERSTOPS, CENTER BULB, OR FLAT STRIP (VINYLEX, GREENSTREAK PLASTIC PRODUCTS OR APPROVED EQUAL).

APPROVED FOR CONSTRUCTION
LAS VEGAS VALLEY WATER DISTRICT ENGINEERING SERVICES MANAGER
PROJECT NO. 123547 DATE: 12/23/15

REV	DATE	DESCRIPTION	DATE	AGEN APP	DATE	CGW APP

DATE: 12/09/2015

PROJECT NO. 62024-222
DESIGN: GCW
DRAWN: GCW
CHECK: JJJ
PLOT DATE: 12-09-15
PLOT TIME: 21:02:39

G.C. WALLACE COMPANIES
ENGINEERS | PLANNERS | SURVEYORS
1555 S. RAINBOW BLVD - LAS VEGAS, NV 89146
T: 702.804.2000 F: 702.804.2299 GCWALLACE.COM
LAS VEGAS

F:\Projects\600\62024-222\DWG\Production\24C82c38_LA17Z.dwg
Paul Brennard

THE HOWARD HUGHES COMPANY, LLC

VILLAGE 24 - CROSSBRIDGE DRIVE UNIT 2
IMPROVEMENT PLANS

LATERAL DETAILS 2

SID NO. 812 PROJECT 9A, 9B AND 10A

DRAWING 38
38 OF 53 SHTS