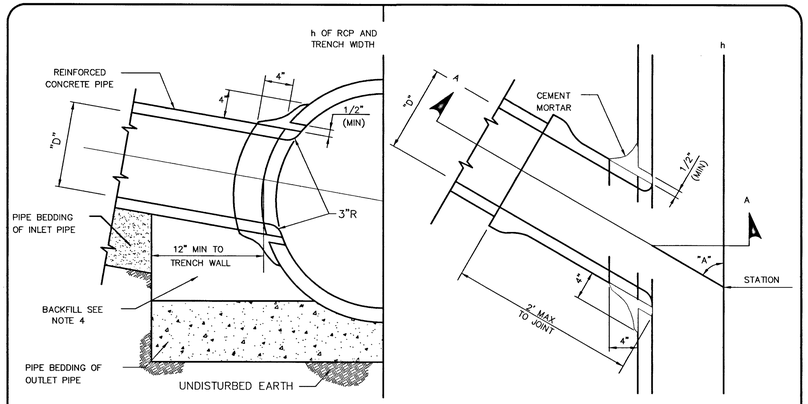

SECTION A–A

PLAN

NOTES:

1. ANGLE "A" SHALL BE BETWEEN 45° AND 90° AND "D" SHALL NOT EXCEED 1/2 THE INSIDE DIAMETER OF THE MAIN STORM DRAIN PIPE.
2. THE OPENING INTO THE MAIN STORM DRAIN SHALL BE THE OUTSIDE DIAMETER OF THE INLET PIPE PLUS 1" MIN OR 3" MAX.
3. BURN OR CHIP END OF INLET PIPE FLUSH WITH INNER SURFACE OF MAINLINE PIPE. ROUND EDGES OF MAIN LINE AND INLET PIPE.
4. BACKFILL WITH SLURRY CONTAINING MINIMUM 1 1/2 SACKS P.C./C.Y. SLURRY BACK SHALL NOT EXTEND PAST JOINT LOCATION OF INLET PIPE.

PIPE JUNCTION DETAIL (7 / –)

NOT TO SCALE

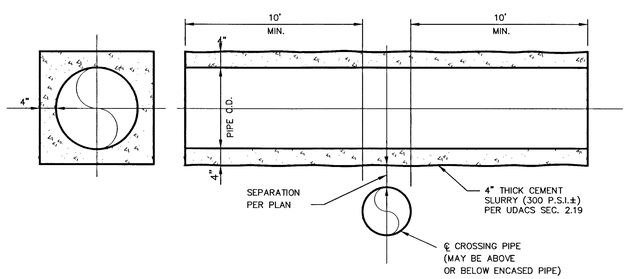

CONCRETE ENCASEMENT DETAIL (6 / –)

NOT TO SCALE

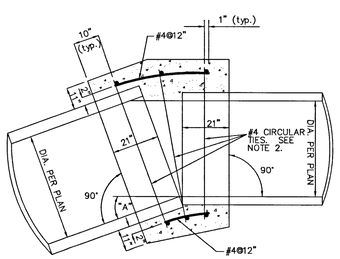

PLAN

NOTES:

1. WHERE THE SLOPE OF THE UPSTREAM PIPE IS GREATER THAN THE SLOPE OF THE DOWNSTREAM PIPE, JOIN SOFFITS. WHERE THE SLOPE OF THE UPSTREAM PIPE IS LESS THAN THE SLOPE OF THE DOWNSTREAM PIPE, JOIN INVERTS.
2. WHERE THE SPACE BETWEEN THE PIPE EXTREMITIES EXCEEDS 2 1/2 INCHES, THE NUMBER OF CIRCULAR TIES SHALL BE INCREASED TO MAINTAIN A MAXIMUM SPACING OF 6 INCHES CENTER TO CENTER. CIRCULAR TIES SHALL HAVE A DIAMETER 5 INCHES GREATER THAN THE OUTSIDE DIAMETER OF THE LARGER PIPE.
3. CONTRACTOR TO USE CONCRETE COLLAR WHEN CONNECTING TO AN EXISTING STUB WHERE A FIELD ADJUSTMENT IS NEEDED. ANGLE "A" SHALL NOT EXCEED 45°.

CIRCULAR TIES:

PIPE DIAMETER	SPACE BETWEEN PIPE EXTREMITIES	NO. OF CIRCULAR TIES
21" or less	2 1/2"	3
24" to 30"	2 1/2" or less	3
33" to 57"	2 1/2" or less	4
60" to 66"	2 1/2" or less	5

CONCRETE COLLAR DETAIL (5 / –)

NOT TO SCALE

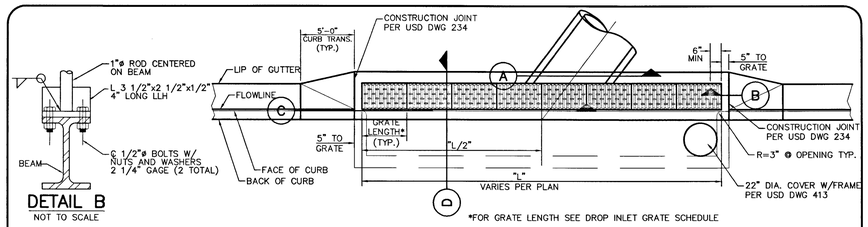

DETAIL B

NOT TO SCALE

*FOR GRATE LENGTH SEE DROP INLET GRATE SCHEDULE

DROP INLET LAYOUT PLAN

NOT TO SCALE

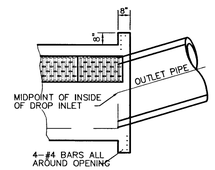

END CONNECTION DETAIL

NOT TO SCALE

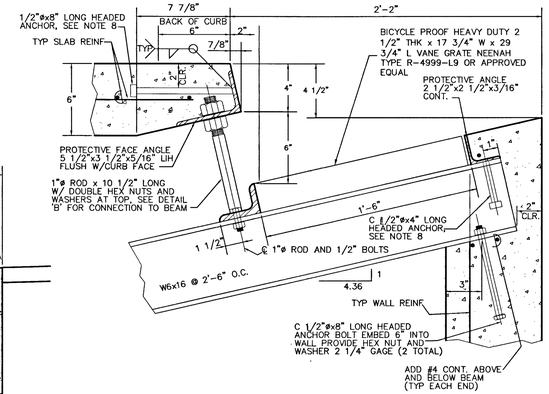

DETAIL A – PROTECTIVE FACE & ROD

NOT TO SCALE

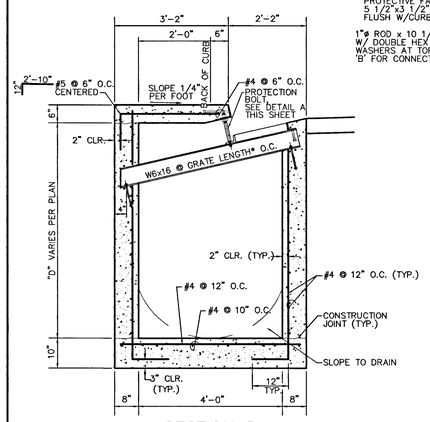

SECTION D

NOT TO SCALE

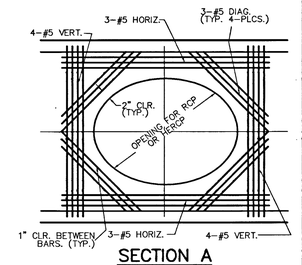

SECTION A

NOT TO SCALE

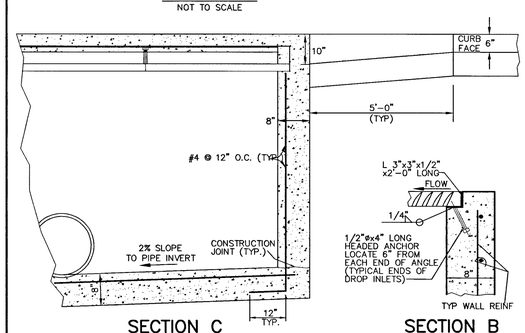

SECTION C

NOT TO SCALE

SECTION B

NOT TO SCALE

DROP INLET GRATE SCHEDULE

	STATION/OFFSET	"L"	GRATE LENGTH	NO. OF GRATES
CROSSBRIDGE	35+80.57 33.50' RT	10.0	2.50'	4
	35+83.19 33.50' LT	7.5	2.50'	3
	39+06 33.50' LT	5.0	2.50'	2
	42+11 33.50' RT	5.0	2.50'	2
	42+11 33.50' LT	5.0	2.50'	2
	49+29 22.00' RT	5.0	2.50'	2
	49+33 22.00' LT	5.0	2.50'	2
	57+30, 33.50' RT	7.5	2.50'	3
	57+17, 33.50' LT	7.5	2.50'	3
	62+91, 33.50' RT	10.0	2.50'	4
	62+91, 34.09' LT	10.0	2.50'	4

NOTES:

1. CONCRETE SHALL BE CLASS "D" OR "DA".
2. OUTLET PIPE SHALL BE TRIMMED FLUSH WITH INSIDE FACE OF INLET.
3. ALL EXPOSED METALS SHALL BE HOT DIP GALVANIZED AFTER FABRICATION.
4. PROVIDE 1/2" (MIN.) CLEARANCE ALL AROUND THE STEEL BEAM, DRY PACK AFTER INSTALLATION.
5. WHEN REQUIRED BY THE LENGTH OF OPENING, PLATE ANGLE MAY BE DELIVERED IN SECTIONS AND BUTT WELDED IN PLACE.
6. ALL GALVANIZING DAMAGED BY WELDING SHALL RECEIVE TWO COATS OF GALVALLOY OR EQUAL.
7. ANGLE ANCHORS SHALL BE EMBEDDED MIDPOINT IN EACH ENDWALL AND EVENLY SPACED (MAXIMUM SPACING OF 2').

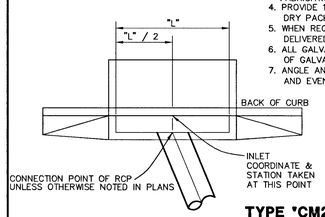

TYPE "CM2" DROP INLET (4 / –)

NOT TO SCALE

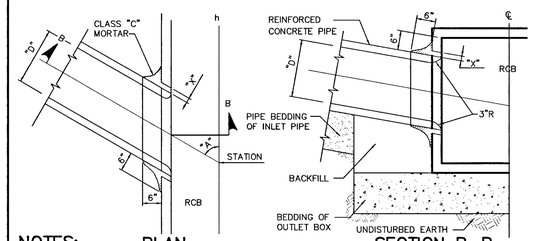

PLAN

SECTION B–B

NOTES:

1. ANGLE "A" SHALL BE BETWEEN 60°.
2. DIMENSION "D" SHALL BE EQUAL TO OR LESS THAN 1/2 THE INSIDE DIMENSION OF THE MAINLINE BOX.
3. DIMENSION "X" SHALL BE 1" MINIMUM AND 3" MAXIMUM.
4. BURN OR CHIP END OF INLET PIPE FLUSH WITH INNER SURFACE OF MAINLINE. ROUND EDGES OF MAINLINE AND INLET PIPE.

BOX PENETRATION DETAIL (8 / –)

NOT TO SCALE

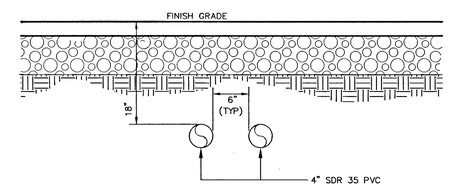

NOTE:

CONTRACTOR TO EXTEND SLEEVES 1' (12") BEHIND BACK OF CURB, TYP.

IRRIGATION SLEEVE

BANK "B"

NOT TO SCALE (2 / –)

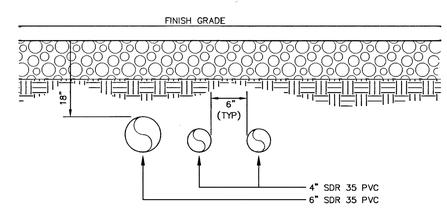

NOTE:

CONTRACTOR TO EXTEND SLEEVES 1' (12") BEHIND BACK OF CURB, TYP.

IRRIGATION SLEEVE

BANK "A"

NOT TO SCALE (1 / –)

STATE OF NEVADA PROFESSIONAL ENGINEER — CIVIL — No. 15768 — Gregory C. Wallace — 3-27-2017

REV	DATE	DESCRIPTION	DATE	AGEN APP	DATE	CGW APP	DATE 12/09/2015

PROJECT NO. 62024-222

DESIGN: GCW
DRAWN: GCW
CHECK: AJJ
PLOT DATE: 12-09-15
PLOT TIME: 20:59:22

G.C. WALLACE COMPANIES
ENGINEERS | PLANNERS | SURVEYORS
1555 S. RAINBOW BLVD - LAS VEGAS NV 89146
T: 702.804.2000 F: 702.804.2799 GCWALLACE.COM

LAS VEGAS

F:\Projects\600\62024-222\DWG\Production\24C82c34_D72.dwg
Paul Bremord

THE HOWARD HUGHES COMPANY, LLC

VILLAGE 24 - CROSSBRIDGE DRIVE UNIT 2 IMPROVEMENT PLANS

UTILITY DETAILS 1

H#62305 607465335

DRAWING 34

34 OF 53 SHTS

SID NO. 812 PROJECT 9A, 9B AND 10A

cs-2438.dwg 070303.tbl