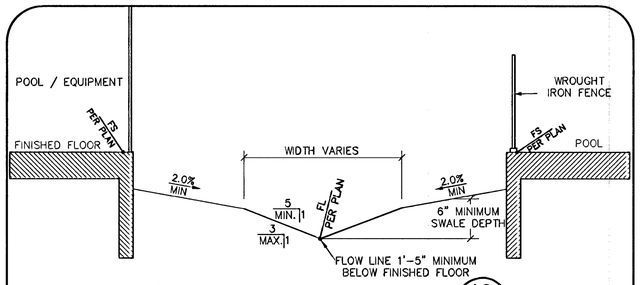

SWALE SECTION (10)
NOT TO SCALE

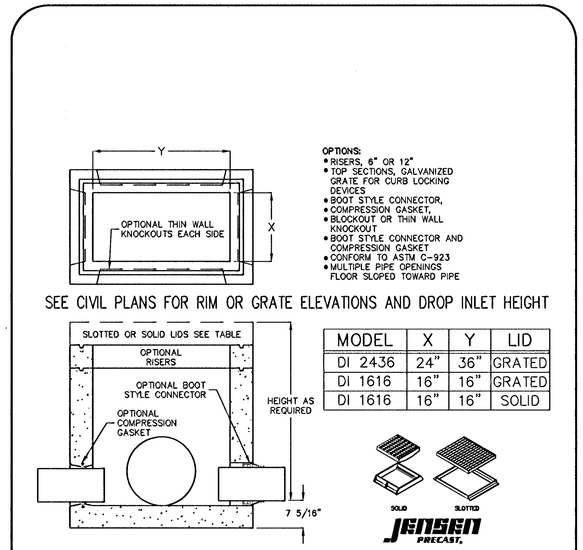

MODEL	X	Y	LID
DI 2436	24"	36"	GRATED
DI 1616	16"	16"	GRATED
DI 1616	16"	16"	SOLID

PRECAST DRAINAGE BASIN–INLET (7)
NOT TO SCALE

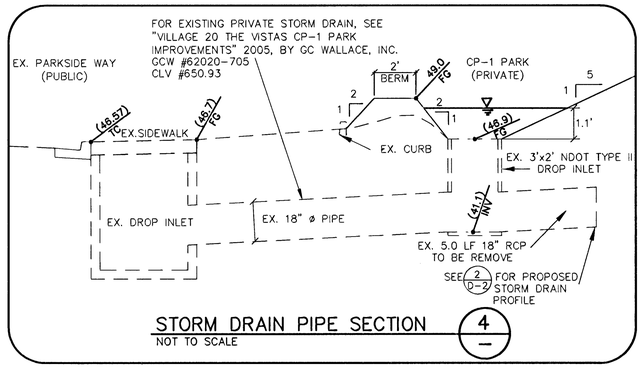

STORM DRAIN PIPE SECTION (4)
NOT TO SCALE

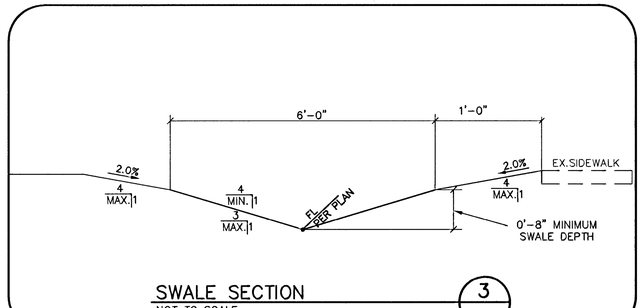

SWALE SECTION (3)
NOT TO SCALE

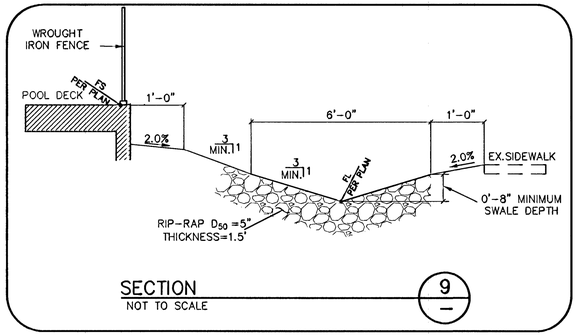

SECTION (9)
NOT TO SCALE

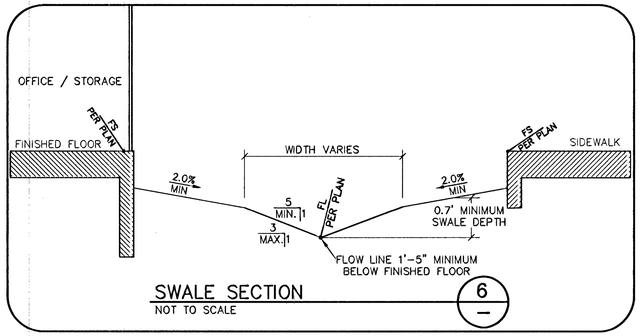

SWALE SECTION (6)
NOT TO SCALE

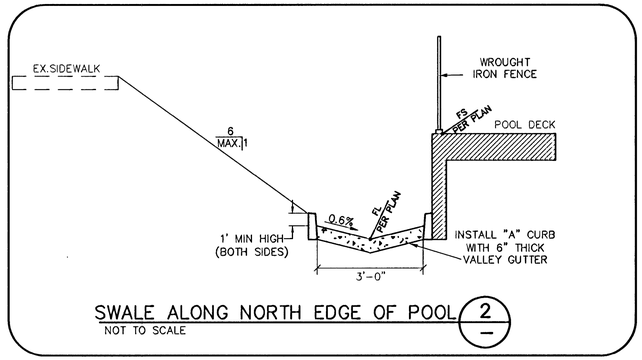

SWALE ALONG NORTH EDGE OF POOL (2)
NOT TO SCALE

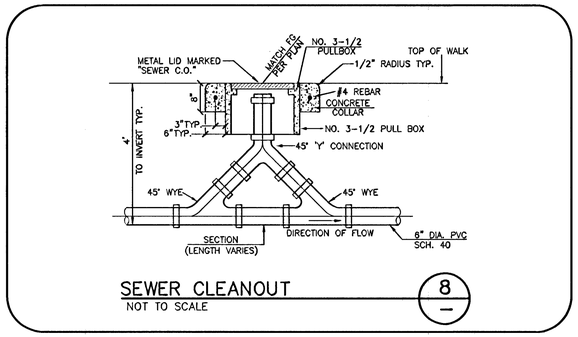

SEWER CLEANOUT (8)
NOT TO SCALE

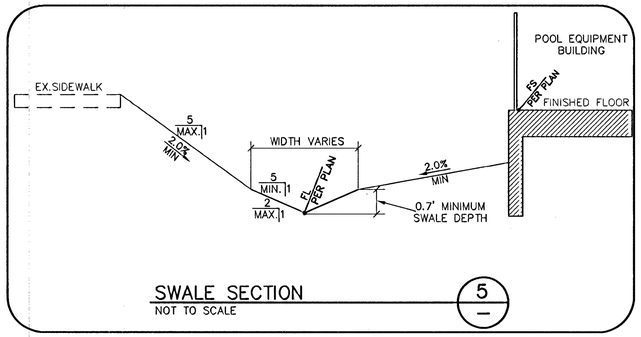

SWALE SECTION (5)
NOT TO SCALE

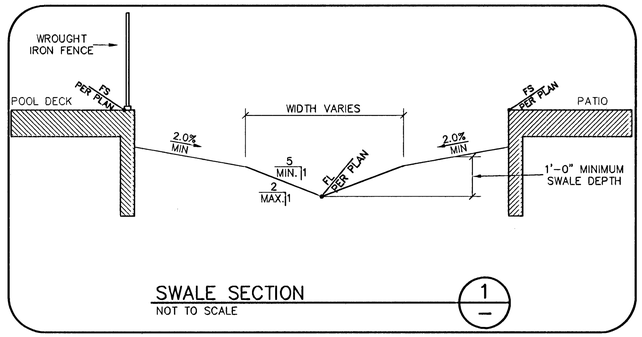

SWALE SECTION (1)
NOT TO SCALE

650.93-2 CLV #52762

VICKI D. VARGAS NEVADA PROFESSIONAL ENGINEER No. 13079 STATE OF NEVADA
DATE: 5-5-14

REV	DATE	DESCRIPTION	DATE	AGEN APP	DATE	GCW APP

PROJECT NO. 398-A1431
DESIGN: RPL
DRAWN: RPL
CHECK: VDM
PLOT DATE: 05-15-14
PLOT TIME: 08:08:49

G.C. WALLACE COMPANIES
ENGINEERS | PLANNERS | SURVEYORS
1555 S. RAINBOW BOULEVARD · LAS VEGAS, NV 89146
T: 702.804.2000 F: 702.804.2299 · GCWALLACE.COM
LAS VEGAS

F:\Projects\300\398-A1431\DWG\Production\CP1c001-09.dwg
Rodgers

SUMMERLIN
VILLAGE 20 CP-1 PARK IMPROVEMENTS PHASE 2
DETAIL SHEET 1

DRAWING D-1
11 OF 12 SHTS