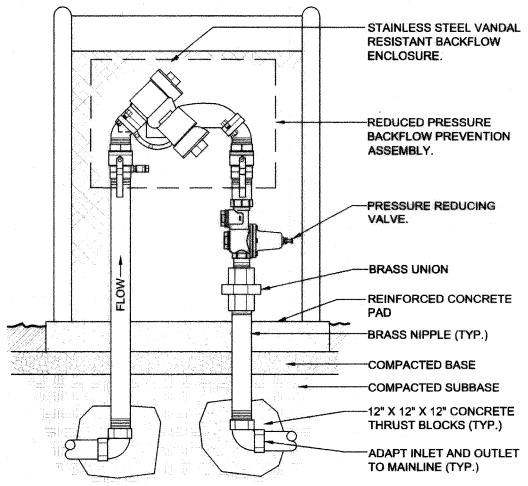

I BACKFLOW PREVENTER

NTS

NOTE:
1. INSTALL PER MANUFACTURER'S SPECIFICATIONS AND RECOMMENDATIONS, INCLUDING DEPTH OF DRIPLINE TUBING.

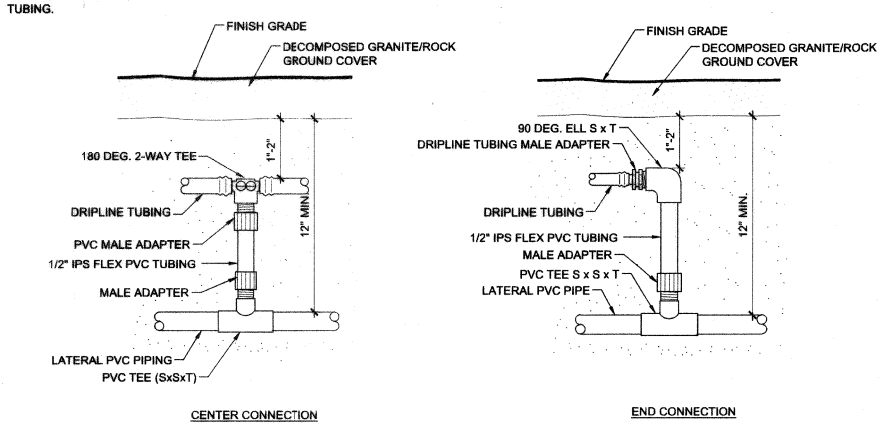

D DRIP LINE TUBING START/END

NTS

NOTE:
1. INSTALL PER MANUFACTURER'S SPECIFICATIONS AND RECOMMENDATIONS.

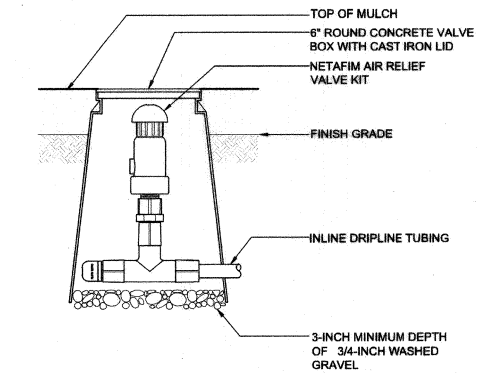

A INLINE DRIP AIR RELIEF VALVE

NTS

NOTES:
1. INSTALL MINIMUM 1 PER 500' OF MAXI-CABLE PER MANUFACTURERS INSTRUCTIONS.
2. USE DRIP VALVE ASSEMBLY VALVE BOX INSTEAD OF 10 INCH ROUND CONCRETE VALVE BOX WHEN AVAILABLE.

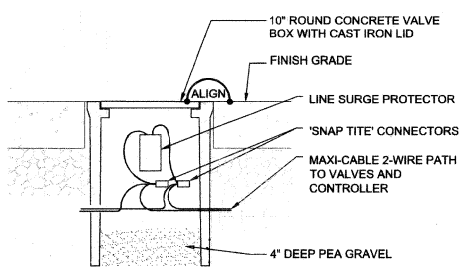

J LINE SURGE PROTECTOR

NTS

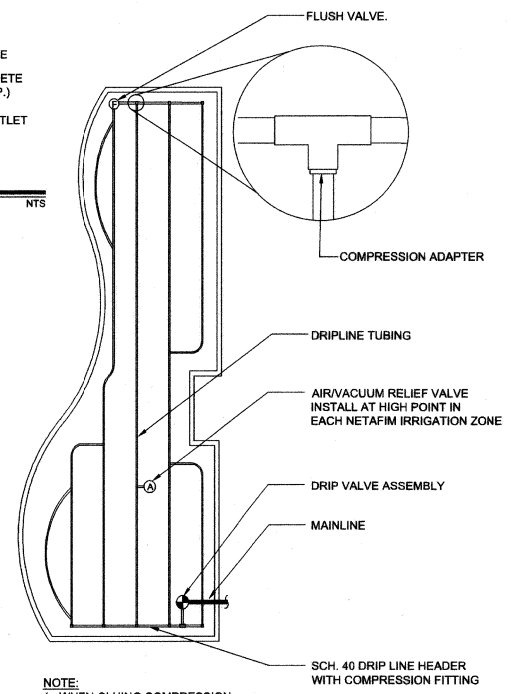

NOTE:
1. WHEN GLUING COMPRESSION ADAPTER INTO THE PVC TEE, USE AN ABS TO PVC BONDING SOLVENT.

G TYPICAL DRIP LINE LAYOUT

NTS

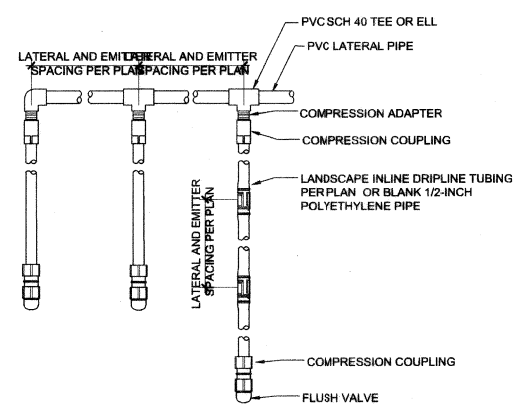

NOTE:
1. INSTALL PER MANUFACTURER'S SPECIFICATIONS AND RECOMMENDATIONS.

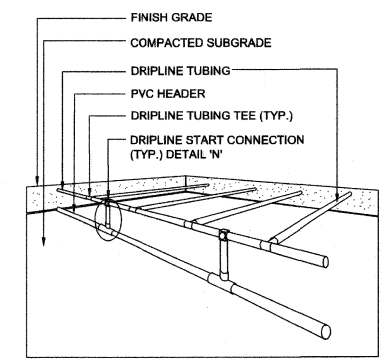

E DRIP LINE LATERALS

NTS

NOTE:
1. PLACE TWO DRIP EMITTERS PER BRASS ROD IF NOT LOCATED IN A GRASS AREA.

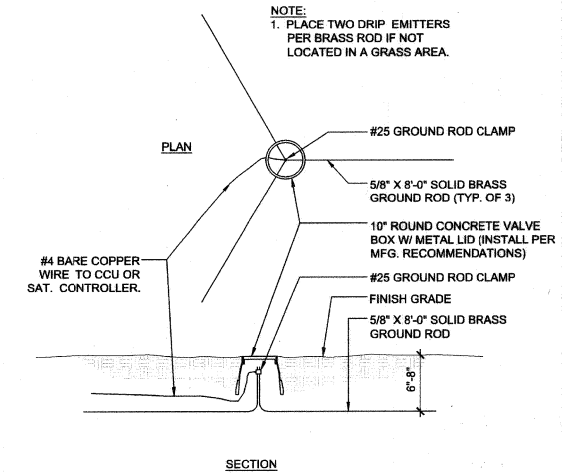

B GROUNDING ROD

NTS

NOTES:
1. THE LENGTH AND NUMBER OF ROWS OF DRIP INLINE TUBING MAY NEED TO BE ADJUSTED TO ACCOMMODATE THE PLANTER WIDTHS AND SHAPES.
2. THE CONFIGURATION OF THE INLINE TUBING WILL VARY DEPENDING ON THE PLANTER SIZE AND SHAPE. TREES AND SHRUBS MAY SHARE EMITTERS/TUBING WHERE APPROPRIATE.
3. FOR STREETSCAPE IRRIGATION, NO ADDITIONAL TUBING OR INLINE EMITTERS ARE NECESSARY FOR THE SHRUBS.

	DRIP INLINE TUBING		GPH
PLANTS (BOTANICAL NAME)	APPROXIMATE LENGTH OF TOTAL TUBING	INLINE EMITTER SPACING (O.C.)	TOTAL GPH PER PLANT
TREES			
PISTACIA CHINENSIS	64 FEET	24"	28
PROSOPIS GLANDULOSA	64 FEET	24"	28

H EMITTER SCHEDULE

NTS

NOTES:
1. DRIPLINE TUBING TO BE INSTALLED 2" BELOW SOIL SURFACE. MULCH COVER PLACED OVER SOIL SURFACE.
2. SEE EMITTER SCHEDULE FOR QUANTITY OF INLINE TUBING PER PLANT. SEE DETAIL 'U', THIS SHEET.
3. INSTALL A FLUSHING VALVE AT THE END(S) OF EVERY INLINE TUBING ZONE.
4. PROVIDE AIR RELIEF VALVE AT HIGHEST POINT OF EACH IRRIGATION ZONE.

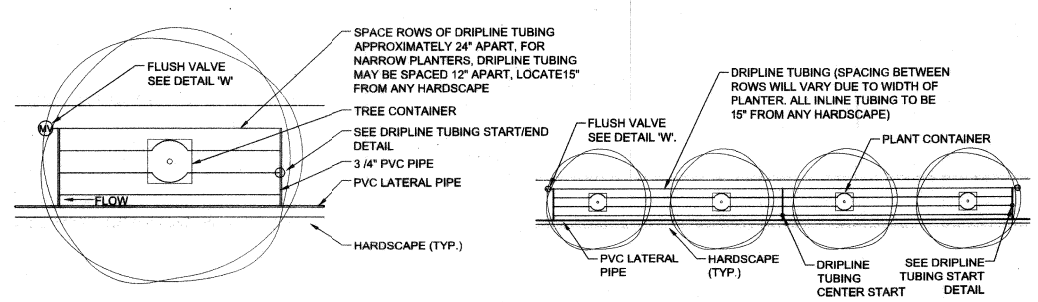

F DRIP LINE LAYOUT FOR NARROW PLANTERS

NTS

NOTE:
1. THIS MANUAL LINE FLUSHING VALVE IS TO BE USED WITH THE TREE IN-LINE TUBING ONLY. TREE IN-LINE TUBING DETAIL.

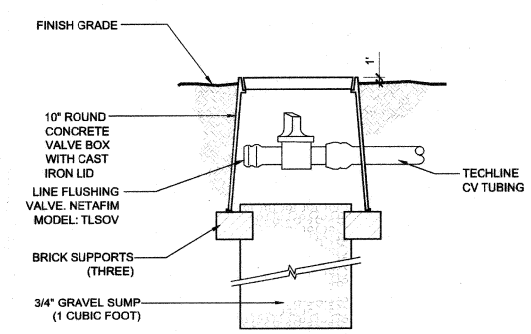

C MANUAL LINE FLUSHING VALVE

NTS

FEDERAL PROJECT NUMBER: CM-0003(180)

NO.	DATE	REVISIONS

PREPARED BY
DEPARTMENT OF PUBLIC WORKS
CAPITAL PROJECT MGMT

southwick
LANDSCAPE ARCHITECTS
7780 W Sahara Ave., Suite 200 · 702.367.1188
Nevada Certificate of Authority #AC00000291

PREPARED FOR
CITY OF LAS VEGAS

H# 48938 · BID# 17-48938
DATE: JANUARY 2018 · DESIGNED BY: MED
SUBMITTAL STAGE: 100% FINAL · DRAWN BY: MED
CHECKED BY: SWS

TITLE
CIMARRON PEDESTRIAN BRIDGE AT SUMMERLIN PARKWAY

SHEET
IRRIGATION DETAILS

REGISTERED LANDSCAPE ARCHITECT · MATT DURHAM · 895 · Expires: 6-30-18 · STATE OF NEVADA

SHEET
L2.03
70 OF 86

DRAWING NO.
676-22