NOTE:
1. INSTALL FLUSH VALVE NEAR THE ROOTBALL OF A TREE OR LARGE SHRUB.

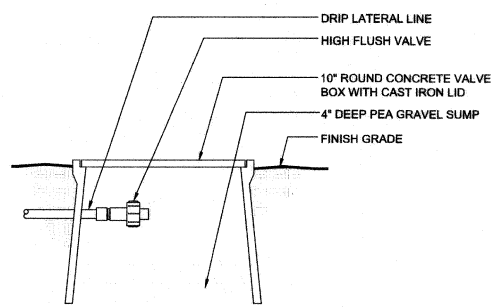

J DRIP FLUSH VALVE

NTS

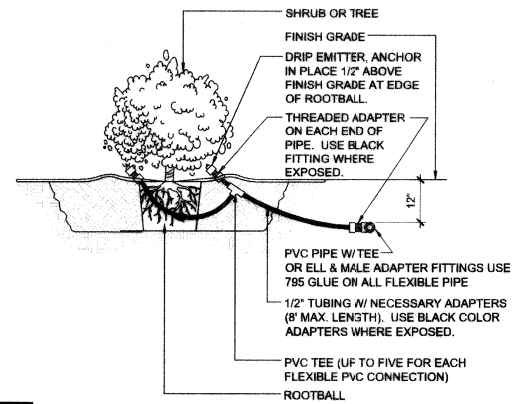

G DRIP EMITTER

NTS

NOTES:
1. PIPE UNDER WALKS, DRIVEWAYS, STRUCTURES, ETC. ARE TO BE SLEEVED.

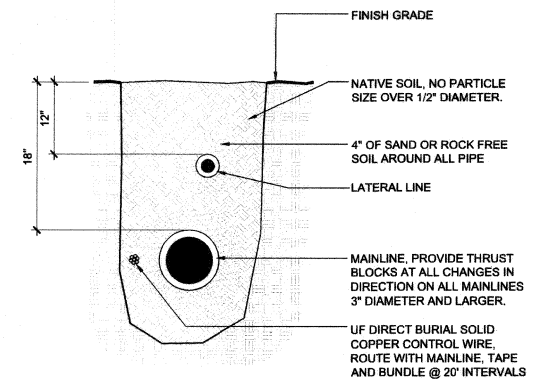

D TRENCH SECTION

NTS

NOTES:
1. INSTALL CONTROLLER PER MANUFACTURER'S. PRINTED INSTRUCTIONS AND PER LOCAL CODES.
2. EXACT LOCATION TO BE APPROVED IN THE FIELD BY OWNER'S REPRESENTATIVE.
3. CONNECT TO POWER AND IRRIGATION VALVES.

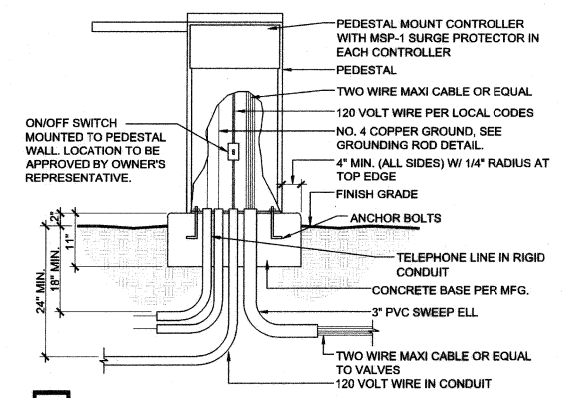

A CONTROLLER

NTS

NOTES:
1. FLUSH ALL PIPING PRIOR TO INSTALLING VALVE.
2. ALL WIRE TO BE INSTALLED & SUPPLIED PER LOCAL CODE.
3. PROVIDE 2" TO 3" CLEARANCE ABOVE VALVES AND/OR FILTERS.

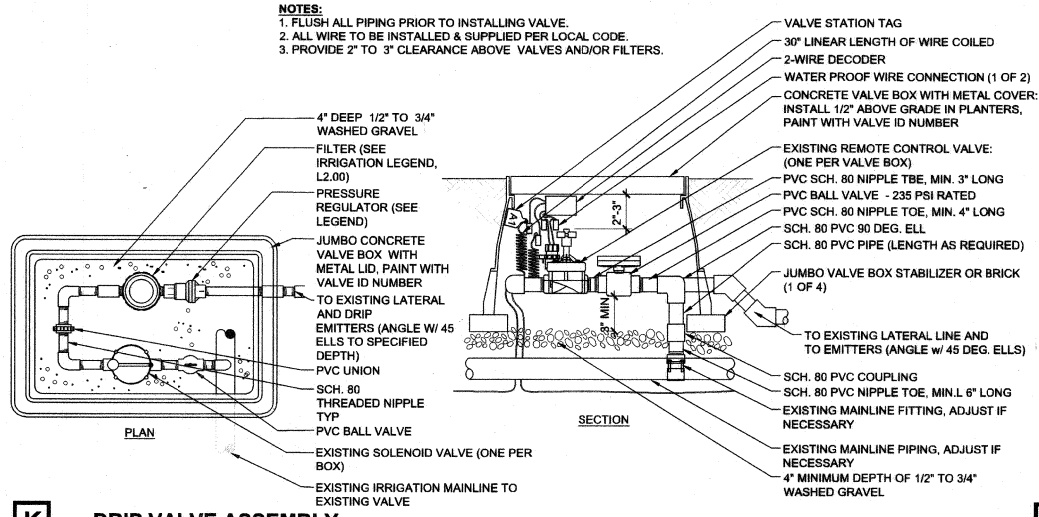

K DRIP VALVE ASSEMBLY

NTS

EMITTER SCHEDULE

PLANT SIZE	QTY	GPH
1 Gallon Shrub	1	1
5 Gallon Shrub	2	1
15 Gallon Shrub	4	1
15 Gallon Tree	8	2
24" Box Tree	12	2
36" Box Tree	20	2
Palm Tree	20	2
Agave	2	0.5
Cacti	1	0.5
Existing Tree	20	2

NOTES:
1. THE IRRIGATION TO CACTI IS TO BE CAPPED ONCE THE PLANTS ARE ESTABLISHED.
2. EMITTER QUANTITIES FOR TREES CAN BE REDUCED IF PLANTER AREAS ARE TOO SMALL TO PROVIDE ADEQUATE ROOM FOR SPECIFIED EMITTERS.
3. PROVIDE A MINIMUM OF (4) EMITTERS TO TREES IN PLANTERS 36 SQUARE FEET OR LESS.

H EMITTER SCHEDULE

NTS

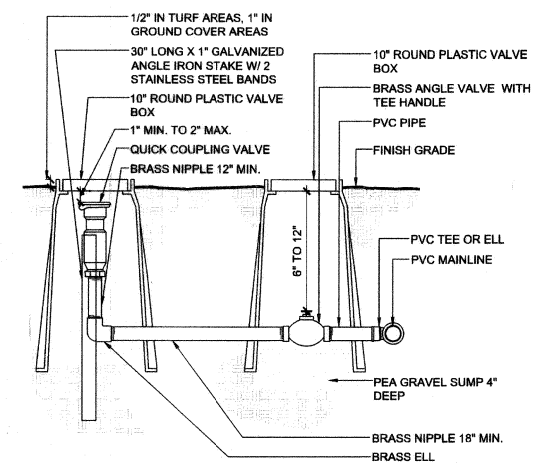

E QUICK COUPLER

NTS

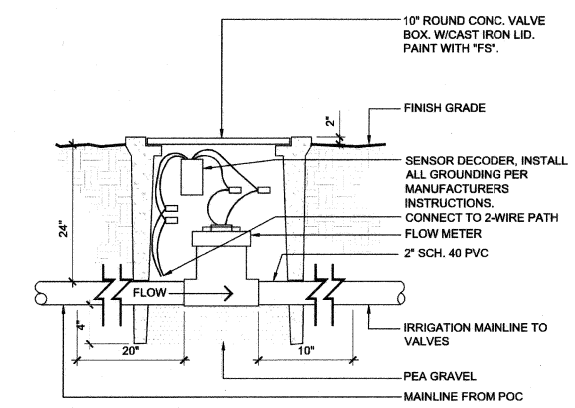

B FLOW METER/ SENSOR

NTS

NOTES:
1. DRIPLINE TUBING TO BE INSTALLED 2" BELOW SOIL SURFACE. MULCH COVER PLACED OVER SOIL SURFACE.
2. SEE EMITTER SCHEDULE FOR QUANTITY OF INLINE TUBING PER PLANT.
3. INSTALL A FLUSHING VALVE AT THE END(S) OF EVERY INLINE TUBING ZONE.
4. PROVIDE AIR RELIEF VALVE AT HIGHEST POINT OF EACH IRRIGATION ZONE.
5. PROVIDE ADDITIONAL RINGS OF TUBING UNTIL THE REQUIRED GPH ARE FULFILLED. SEE EMITTER SCHEDULE, DETAIL 'U', THIS SHEET.

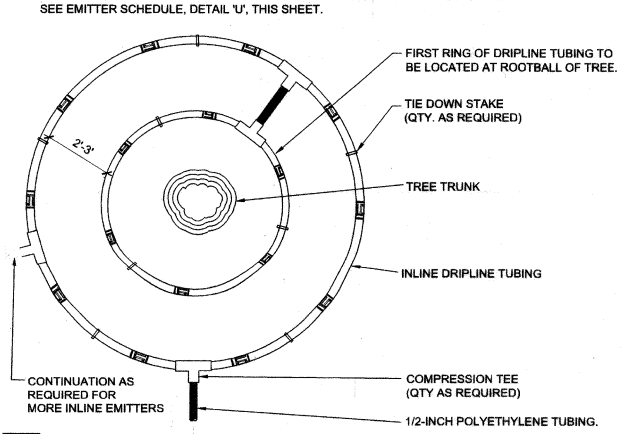

L DRIP LINE LAYOUT FOR TREES @ OPEN PLANTERS

NTS

NOTES:
1. THIS IS A SUGGESTED EMITTER LAYOUT PLAN. ACTUAL LA*OUT MAY VARY DEPENDING ON SURROUNDING FEATURES. THE INTENT IS TO PROVIDE WATER FOR FUTURE ROOT GROWTH.
2. ADJACENT TREES AND SHRUBS MAY SHARE THE SAME EMITTER WHERE PATTERNS OVERLAP.
3. BEGIN PLACEMENT OF EMITTERS ADJACENT TO ROOTBALL OF PLANT AND WORK OUTWARD IN ALL DIRECTIONS UNTIL THE REQUIRED NUMBER OF EMITTERS PER PLANT IS OBTAINED. WHERE LARGE PLANTS ARE INSTALLED IN NARROW PLANTERS REDUCE THE QUANTITY OF EMITTERS TO FIT THE SPACE. 5'-0" SQUARE PARKING LOT PLANTERS ONLY NEED FOUR TREE EMITTERS. KEEP ALL EMITTERS 18" FROM ANY CURB, WALK, OR OTHER PLANTER EDGE AND 36" FROM ANY BUILDING OR STRUCTURE.

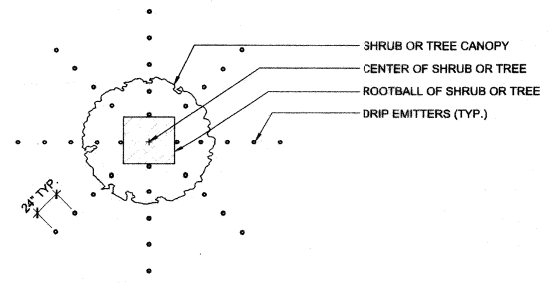

I EMITTER LAYOUT

NTS

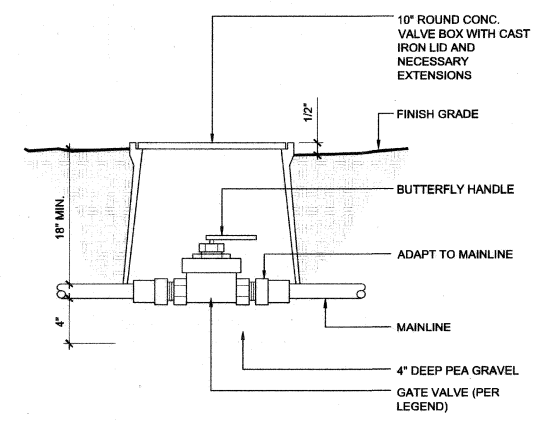

F GATE VALVE

NTS

NOTES:
1. SLEEVE ALL PIPE AND WIRES UNDER WALKS, DRIVEWAYS, STRUCTURES, WALLS, ETC.

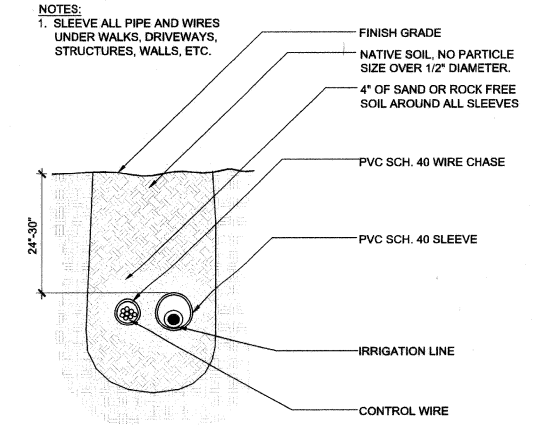

C SLEEVE SECTION

NTS

FEDERAL PROJECT NUMBER: CM-0003(180)

NO.	DATE	REVISIONS

PREPARED BY
DEPARTMENT OF PUBLIC WORKS
CAPITAL PROJECT MGMT

southwick LANDSCAPE ARCHITECTS
1705 W Horizon Ridge Pkwy, Suite 203 702-897-7108
Henderson NV 89012 www.southwickinc.com

PREPARED FOR
CITY OF LAS VEGAS

H# 48938
BID# 17.48938
DATE: JANUARY 2018
DESIGNED BY: MED
DRAWN BY: MED
CHECKED BY: SWS
SUBMITTAL STAGE: 100% FINAL

TITLE
CIMARRON PEDESTRIAN BRIDGE AT SUMMERLIN PARKWAY

SHEET
IRRIGATION DETAILS

REGISTERED LANDSCAPE ARCHITECT
MATT DURFEE
895
Expires: 6-30-18
STATE OF NEVADA

SHEET
L2.02
69 OF 86
DRAWING NO.
676-22