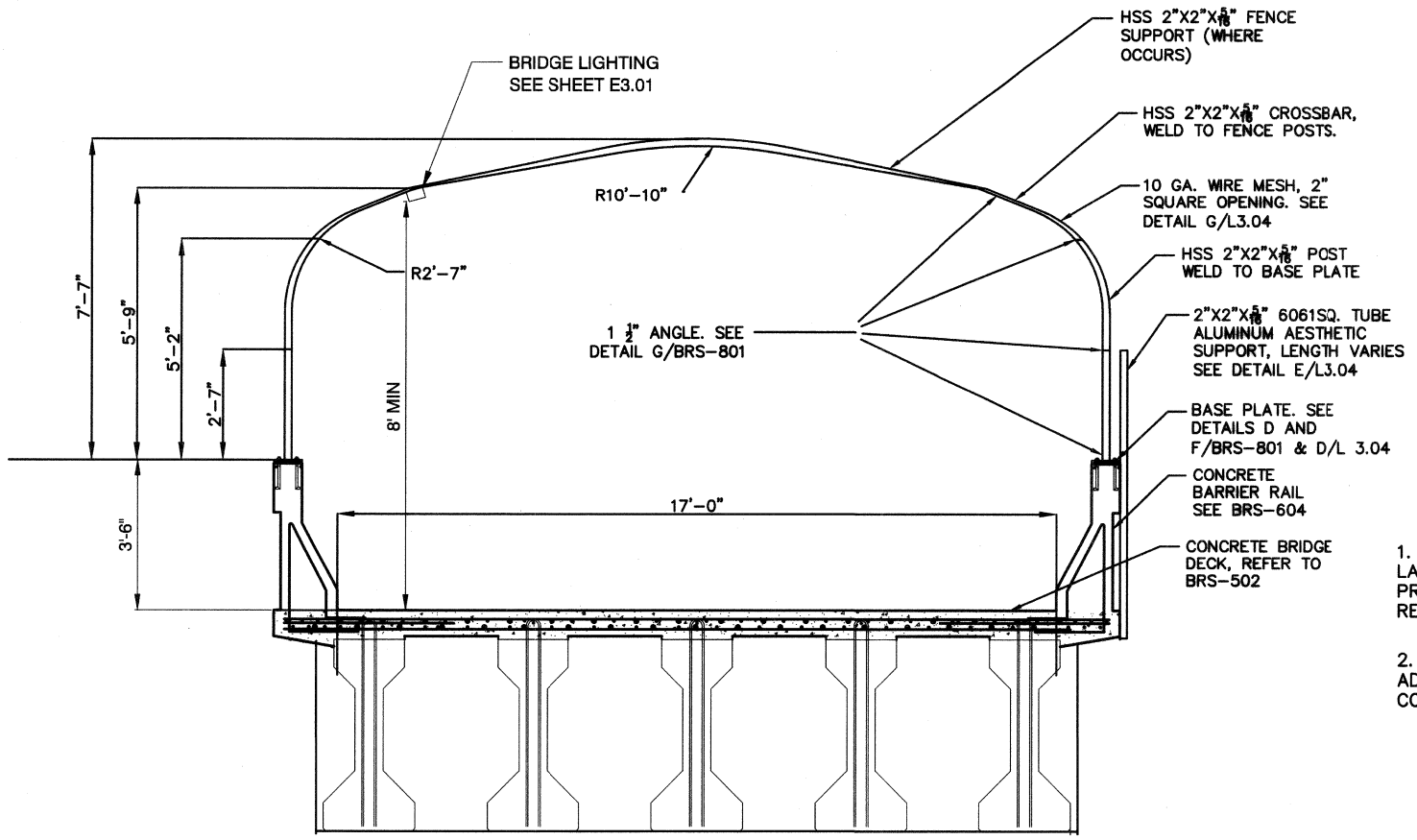

TYPICAL BRIDGE SECTION

(LOOKING UP STATION, SEE SHEET BRS-803 FOR FENCE ELEVATION)

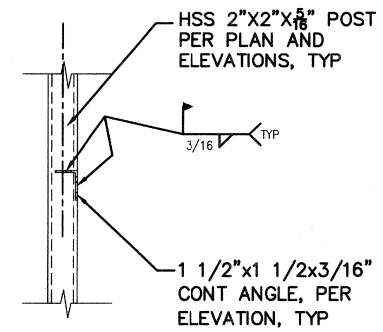

G HORZ DETAIL

1. AESTHETIC PANELS NOT SHOWN, REFER TO LANDSCAPE DRAWING L3.04 FOR AESTHETICS, PRODUCT TYPES, COLOR AND PAINT SCHEDULE REQUIREMENTS.

2. REFER TO LANDSCAPE DRAWING L3.04 FOR ADDITIONAL SUPPORT FRAME DETAILS AND CONNECTION REQUIREMENTS.

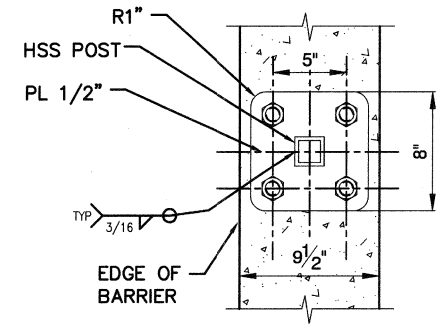

F POST BASE PLAN

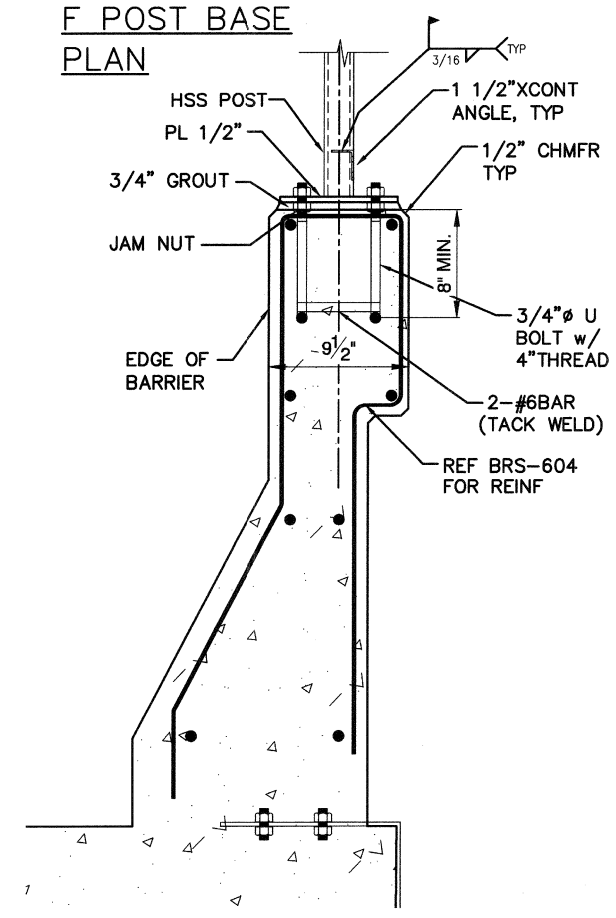

D BASE DETAIL SECTION

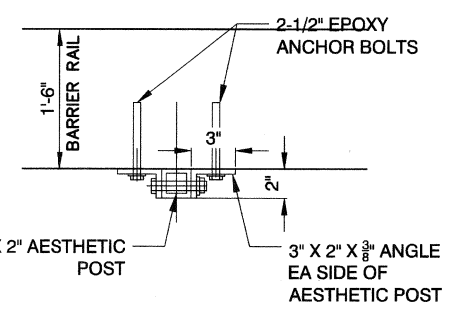

AESTHETIC POST DETAIL PLAN

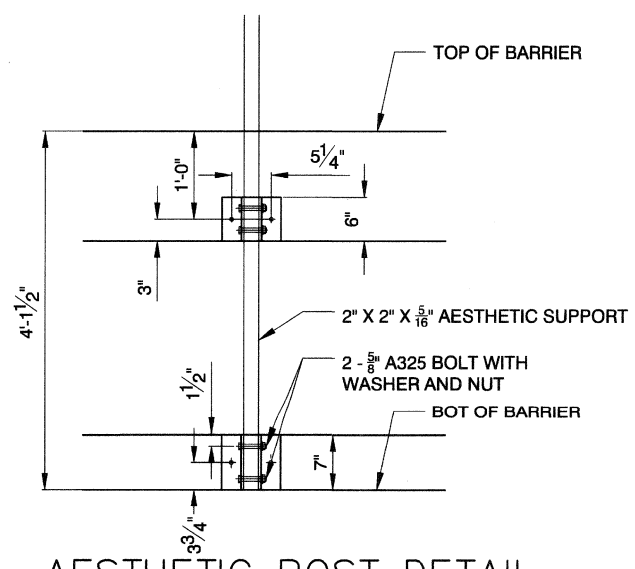

AESTHETIC POST DETAIL ELEVATION

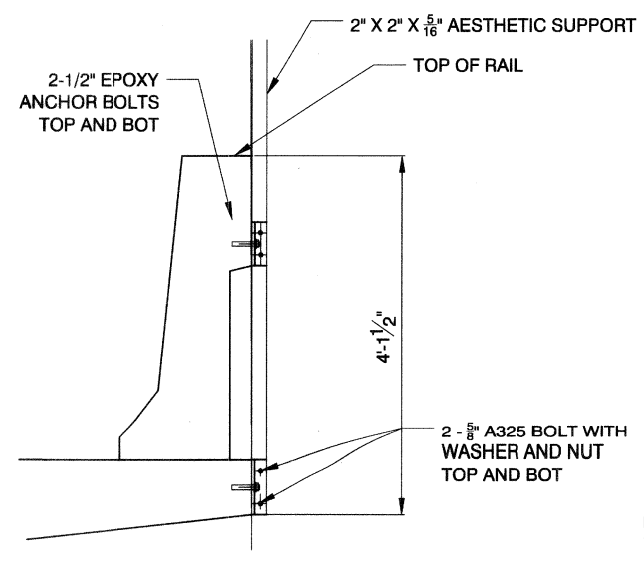

AESTHETIC POST DETAIL SECTION

LAP SPLICE NOTES:
1. LAP SPLICES BASED ON A MINIMUM F'c OF 4,000 PSI @ 28 DAYS.
2. A TOP HORIZONTAL BAR IS ANY HORIZONTAL BAR WITH 12" OR MORE OF FRESH CONCRETE CAST DIRECTLY BENEATH IT.

FEDERAL PROJECT NUMBER: CM-0003(180)

NO.	DATE	REVISIONS

PREPARED BY
DEPARTMENT OF PUBLIC WORKS
CAPITAL PROJECT MGMT

POGGEMEYER DESIGN GROUP
6960 Smoke Ranch Road - Suite 110
Las Vegas, Nevada 89128 - (702) 255-8100

PREPARED FOR
CITY OF LAS VEGAS

H# 48938 | BID# 17.48938
DATE: JANUARY 2018 | DESIGNED BY: SRR
SUBMITTAL STAGE: 100% FINAL | DRAWN BY: AP | CHECKED BY: AP

TITLE: CIMARRON PEDESTRIAN BRIDGE AT SUMMERLIN PARKWAY
SHEET: FENCE DETAILS

PROFESSIONAL ENGINEER - REGISTERED - NEVADA
MICHAEL VECCHIARELLI
EXP. 06-30-18
CIVIL
No. 9052
5-9-18

SHEET
BRS-801
59 OF 86
DRAWING NO.
676-22

G:\14078 CIMARRON PEDESTRIAN BRIDGE\H48938\SHEET SET\DWG\H48938-07-S0801.DWG
1/9/18