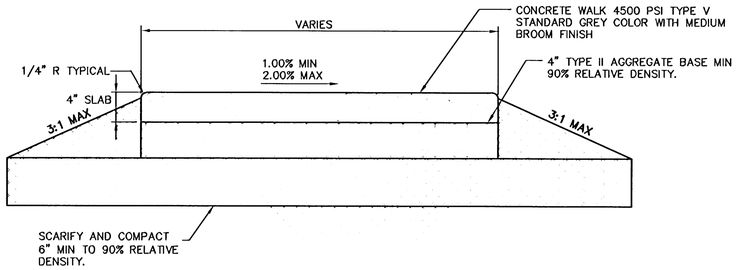

1 / DT01 CONCRETE PATHWAY/SURFACE DETAIL N.T.S.

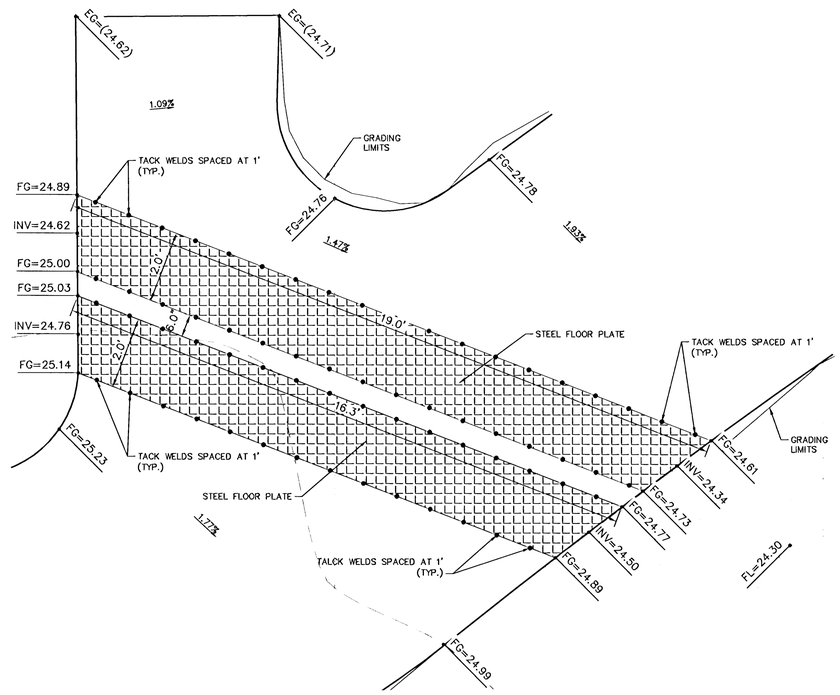

PLAN

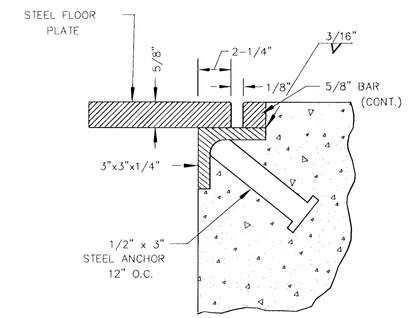

DETAIL "I"

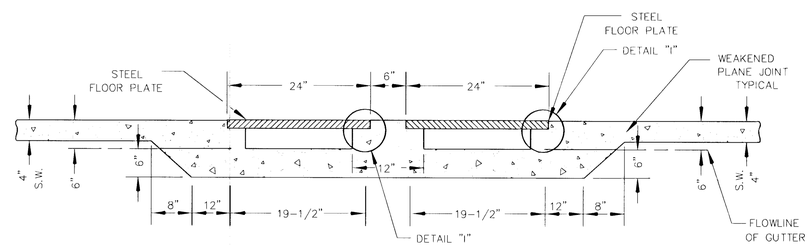

SECTION A-A

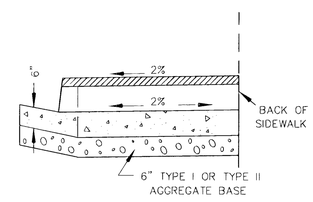

SECTION B-B

NOTES:

ALL EXPOSED METAL PARTS SHALL BE GALVANIZED AND ALL GALVANIZING DAMAGED BY FABRICATION OR INSTALLATION SHALL RECEIVE TWO COATS OF ALUMINUM PAINT (GALVONOX OR EQUAL).

2 / DT01 SIDEWALK UNDERDRAIN DETAIL N.T.S.

H# 43065 650.90-1

811 know what's below Call before you dig 1-702-227-2929

SAFETY ALERT Call Before You Overhead

Call before you UnderGround 1-702-492-5300

REV	DATE	BY	REVISION

DRAWN BY: SR | DESIGNED BY: MSM | CHECKED BY: MDC
SCALE (H): N/A | SCALE (V): N/A | DATE: April 2013

Kimley-Horn and Associates, Inc.
Engineering, Planning, and Environmental Consultants
6671 Las Vegas Boulevard South, Suite 320
Las Vegas, Nevada 89119
TELE No. (702) 862-3600
© 2013

CITY OF LAS VEGAS

DEPARTMENT OF PUBLIC WORKS

PROJECT: LOT 2: BILL BRIARE PARK TRAILHEAD

SHEET: DETAILS

MICHAEL COLETY Exp. 12/31/14 CIVIL No. 14482 STATE OF NEVADA PROFESSIONAL ENGINEER

4/4/13

SHEET NO. DT-01

SHEET 2 OF 3 C9

CLV DRAWING NO. 676-5-3

1491

Date: April 04, 2013 - 11:05am / User: Michael.Mosley
Path: K:\LAV_PublicTrans\062256\024 Bonanza Trail Phase 3\CAD\256024-DT-Th.dwg