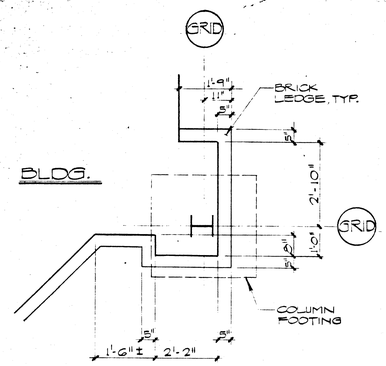

DETAIL (11)
1/2" = 1'-0"

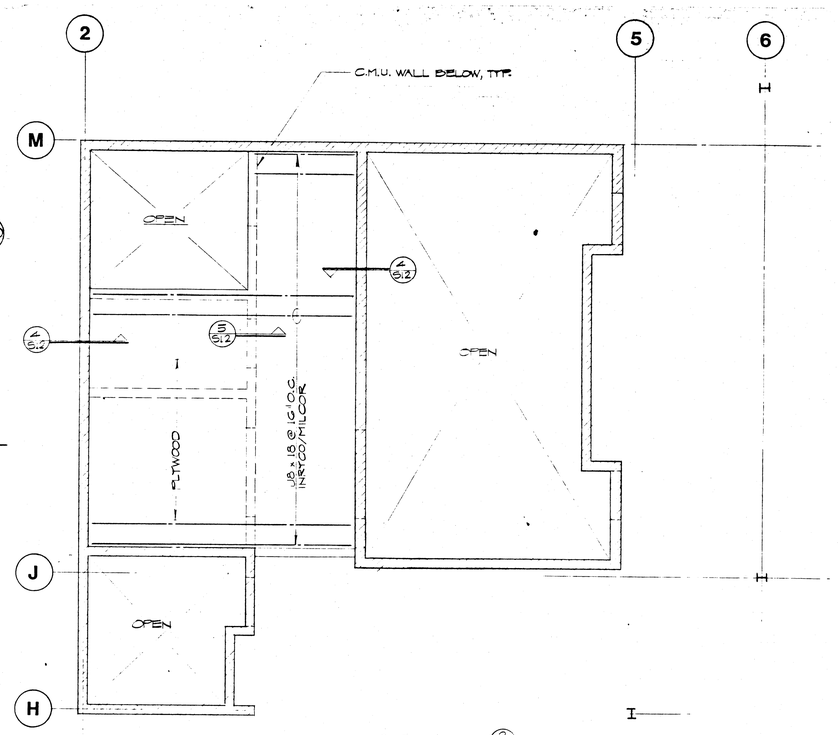

NOTE:
1. PLYWOOD - 3/4" CDX T & G, STRUCT. II PERPENDICULAR TO JOIST WITH DUGLE HEAD SCREWS @ 16" O.C. FOR ATTACHMENT TO JOIST.
2. SEE DETAIL (2/S8) FOR TYP. CONC. BLOCK OPENING.

CEILING FRAMING PLAN (2)
1/4" = 1'-0"

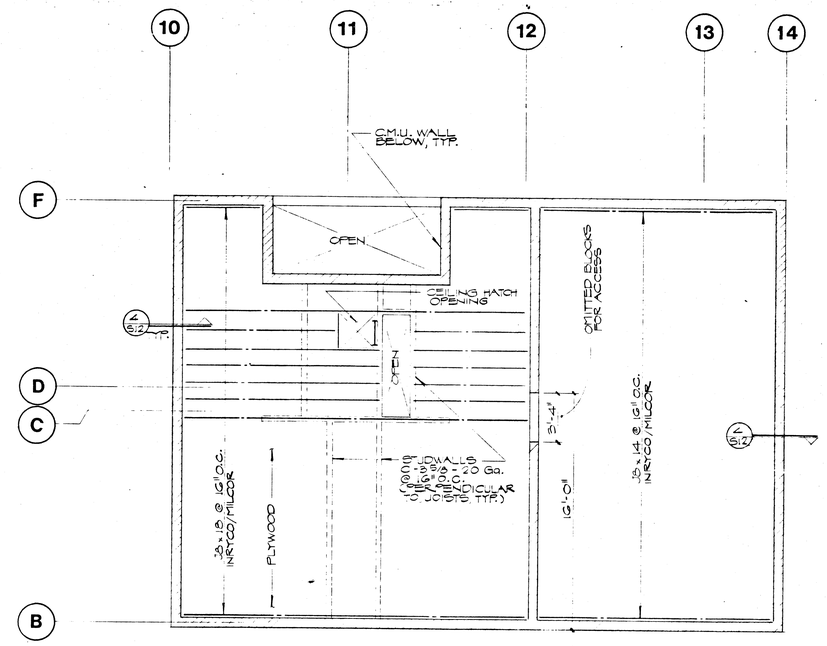

NOTE:
1. PLYWOOD - 3/4" CDX T & G STRUCT II PERPENDICULAR TO JOIST WITH DUGLE HEAD SCREWS @ 16" O.C. FOR ATTACHMENT TO JOIST.
2. SEE DETAIL (2/S8) FOR TYPICAL CONC. BLOCK OPENING

CEILING FRAMING (1)
1/4" = 1'-0"
LIVE LOAD = 50 PSF

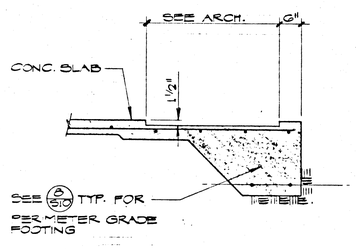

DETAIL (9)
3/4" = 1'-0"

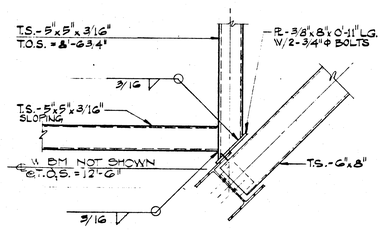

DETAIL (7)
1" = 1'-0"

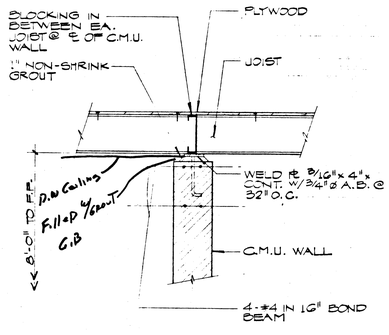

DETAIL (5)
1" = 1'-0"

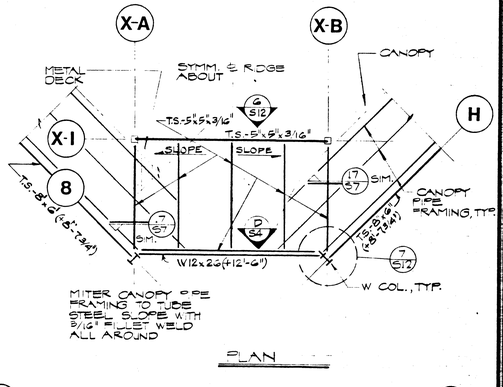

DETAIL (3)
1/2" = 1'-0"

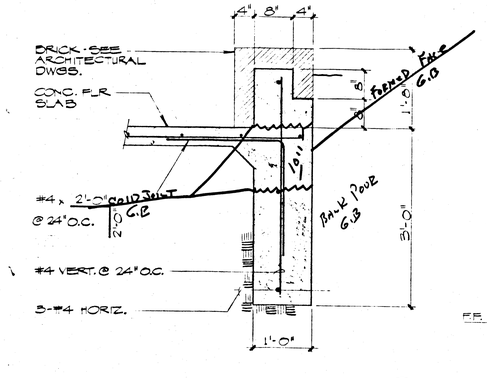

DETAIL (8)
1" = 1'-0"

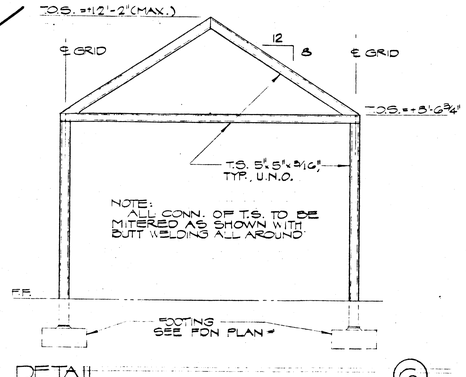

DETAIL (6)
3/8" = 1'-0"

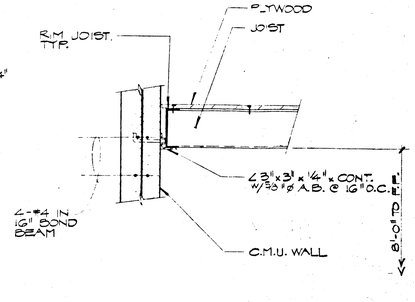

DETAIL (4)
1" = 1'-0"

GUNNY, BRIZENDINE & POGGEMEYER
ENGINEERS PLANNERS
1900 WEST SAHARA AVENUE • LAS VEGAS • NEVADA 89102 (702) 362-1500
825 MARGRAVE DRIVE • RENO • NEVADA 89502 (702) 827-1101
84123

DATE 10-23-85
DRAWN
CHECKED
JOB NO. 24-1181

DOBRUSKY KITTRELL GARLOCK Architects aia
5555 CAMBRIDGE ST. LAS VEGAS, NEVADA 89109 (702) 733-0433

City of Las Vegas
Downtown Transportation Center
Las Vegas, Nevada

SHEET S-12
OF 5 4/1/87 12

FILE NUMBER 5-70-3.T

Drawing Frame • 1978 VELADAS DRAFTING FILM