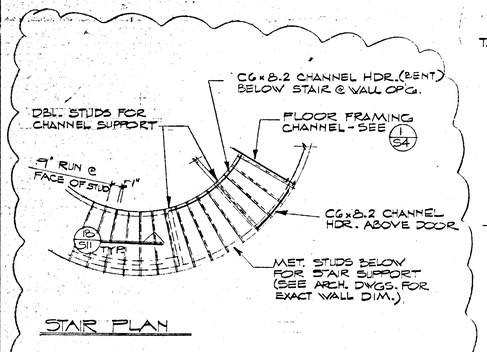

DETAIL 17
1/4" = 1'-0"

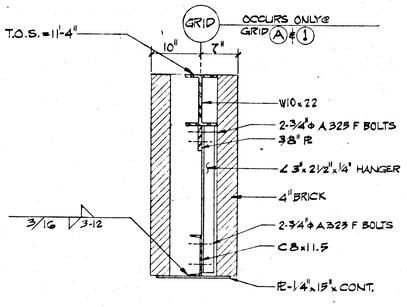

DETAIL 13
1" = 1'-0"

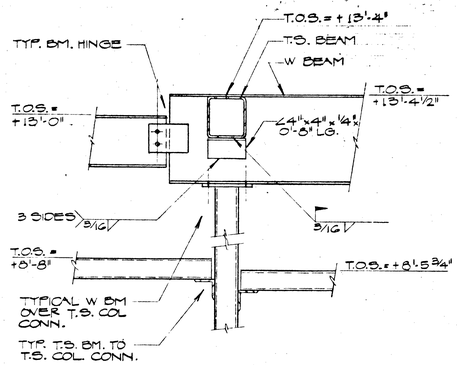

DETAIL 9
3/4" = 1'-0"

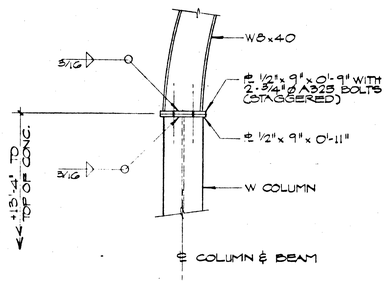

DETAIL 5
1" = 1'-0"

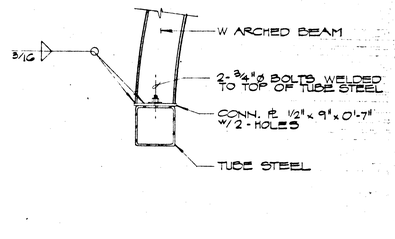

DETAIL 1
1" = 1'-0"

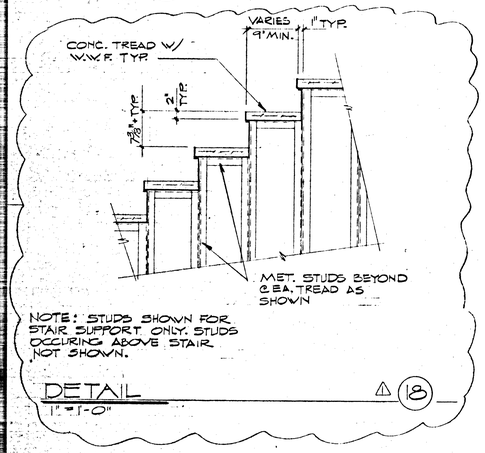

DETAIL 18
1" = 1'-0"

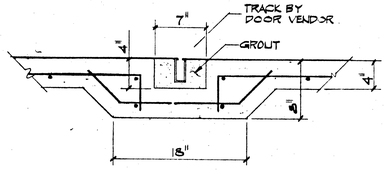

DETAIL 14
1 1/2" = 1'-0"

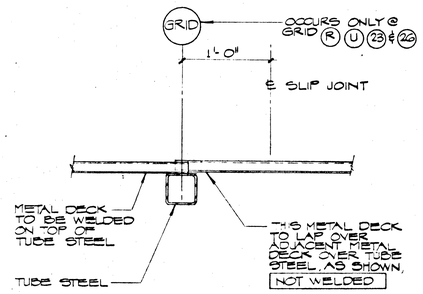

DETAIL 10
1 1/2" = 1'-0"

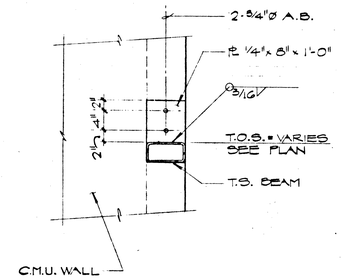

DETAIL 6
1" = 1'-0"

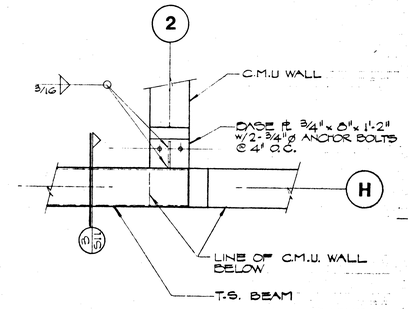

PLAN

DETAIL 2
1" = 1'-0"

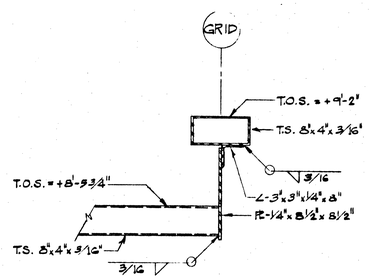

DETAIL 17
1 1/2" = 1'-0"

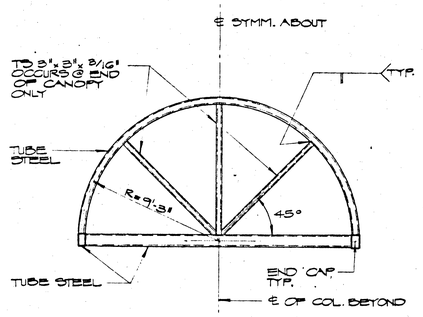

DETAIL 11
1/4" = 1'-0"

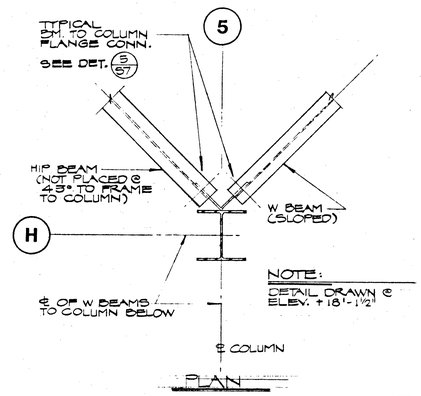

PLAN

DETAIL 7
1" = 1'-0"

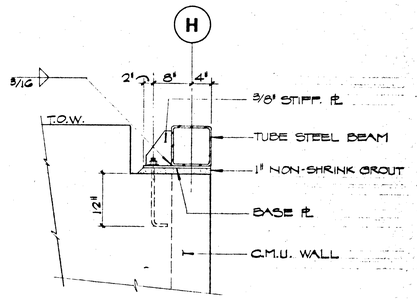

DETAIL 3
1" = 1'-0"

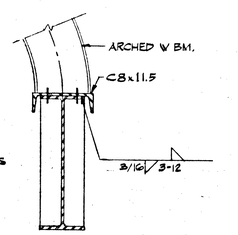

DETAIL 16
1 1/2" = 1'-0"

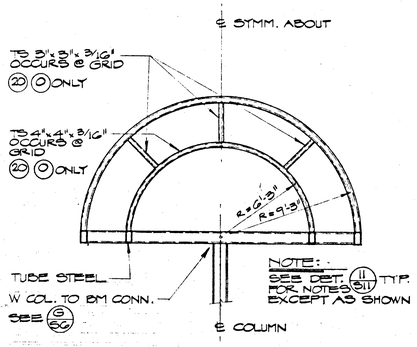

DETAIL 12
1/4" = 1'-0"

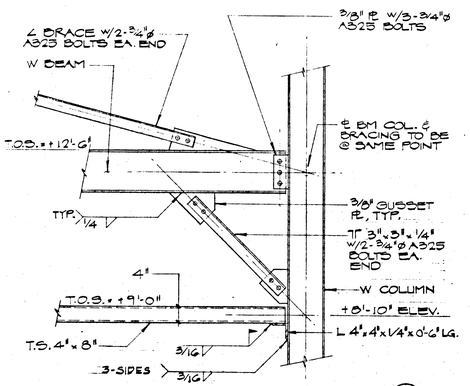

DETAIL 8
3/4" = 1'-0"

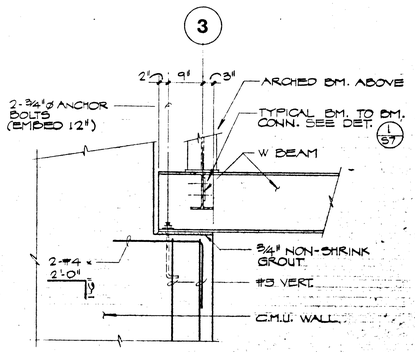

DETAIL 4
3/4" = 1'-0"

11-15-05 ADDENDUM

GUNNY, BRIZENDINE & POGGEMEYER
ENGINEERS
PLANNERS
LAS VEGAS • NEVADA 89119 • (702) 361-1963
RENO • NEVADA 89502 • (702) 337-1100
8-4-03

DATE: 12-5-05
DRAWN:
CHECKED:
JOB NO: 590-2J

DOBRUSKY KITTRELL GARLOCK aia
Architects
3530 CAMBRIDGE ST. LAS VEGAS, NEVADA 89109 (702) 733-0433

City of Las Vegas
Transportation Center
Downtown Las Vegas, Nevada

SHEET S-11
OF 53 OF 65
FILE NUMBER 590-2J