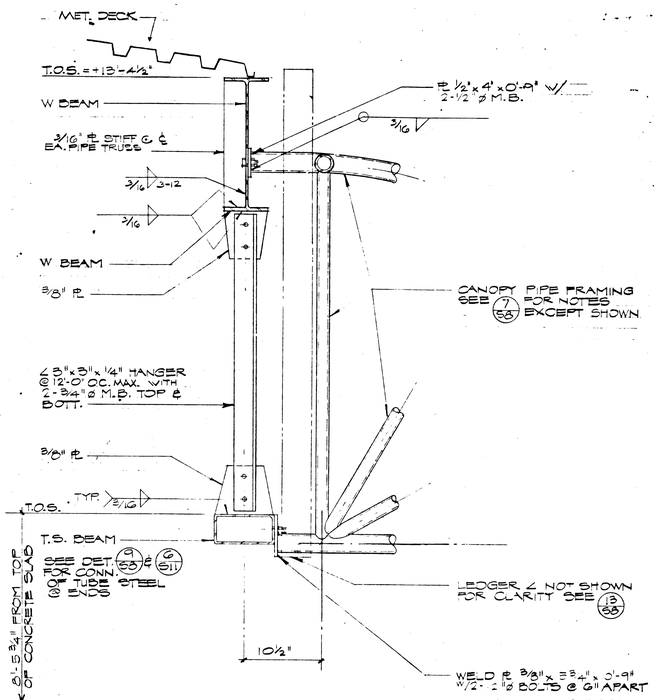

DETAIL 12
1½" = 1'-0"

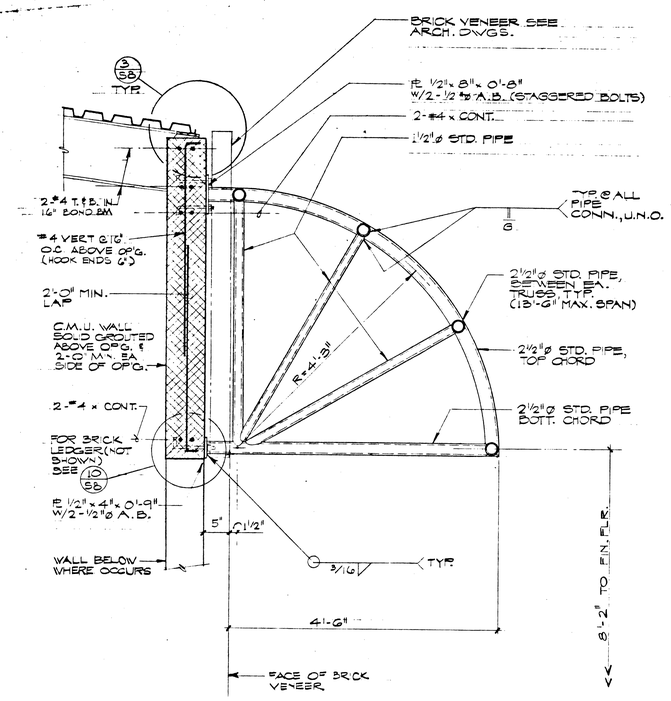

DETAIL 7
1" = 1'-0"

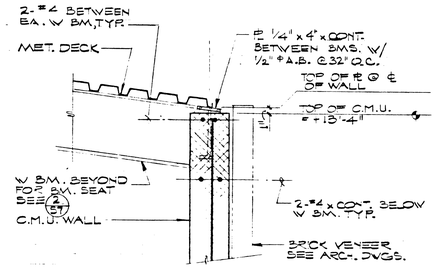

DETAIL 3
1" = 1'-0"

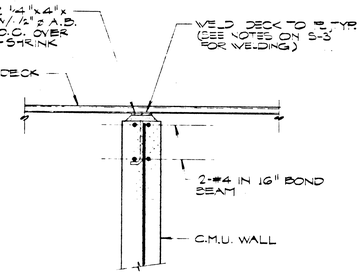

DETAIL 4
1" = 1'-0"

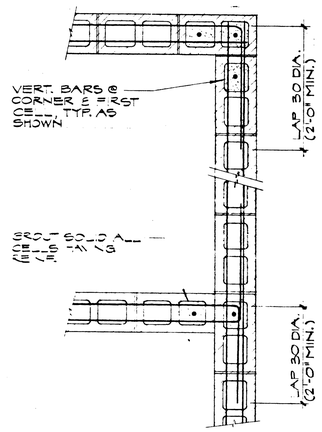

NOTE:
1. CORNER BARS (⊓) MAY BE USED IN PLACE OF BENDING VERT. REINF PROVIDED EACH END LAP IS 30 DIAMETERS (2'-0" MIN).
2. WHERE DIFFERENT SIZE BARS OCCUR AT CORNERS, LAP LENGTH SHALL BE BASED ON LARGEST BAR DIAMETER.

TYP. WALL INTERSECTION

DETAIL 1
NO SCALE

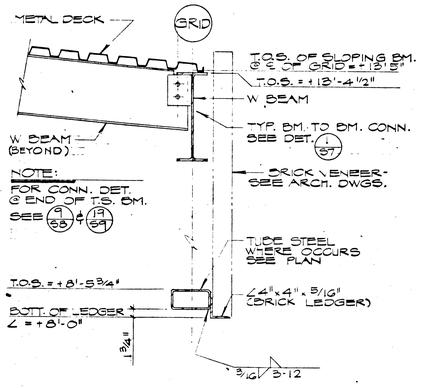

DETAIL 13
1" = 1'-0"

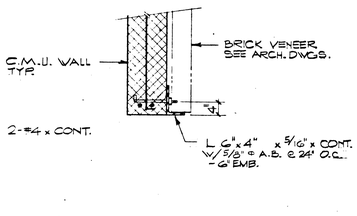

DETAIL 10
1" = 1'-0"

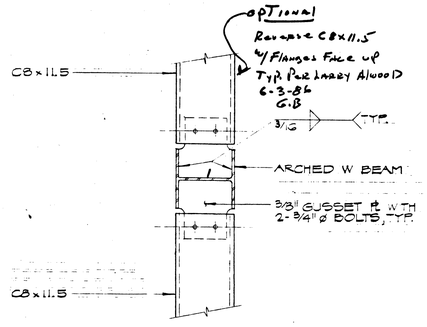

DETAIL 8
1½" = 1'-0"

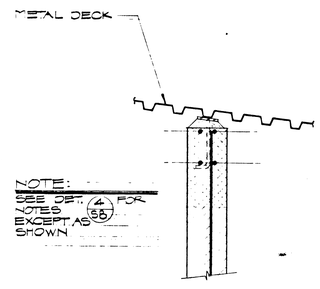

DETAIL 5
1" = 1'-0"

SECTION 2A
NO SCALE

SECTION 2B
NO SCALE

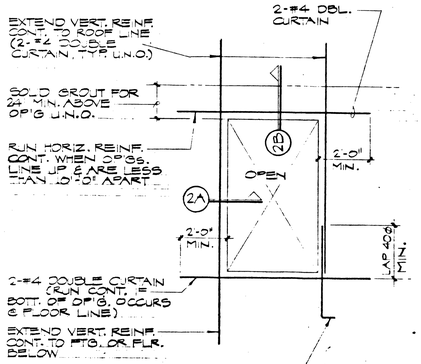

TYP. C.M.U. WALL OPENING

DETAIL 2
NO SCALE

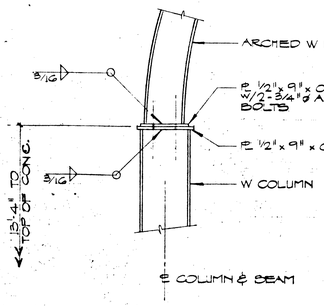

DETAIL 14
1" = 1'-0"

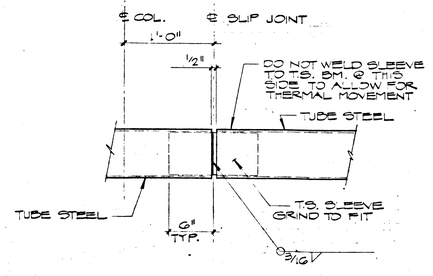

DETAIL 11
1" = 1'-0"

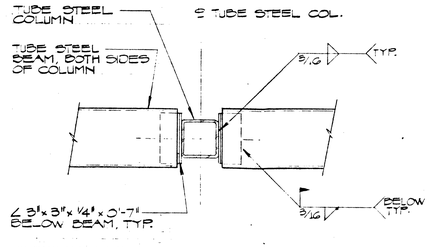

DETAIL 9
1½" = 1'-0"

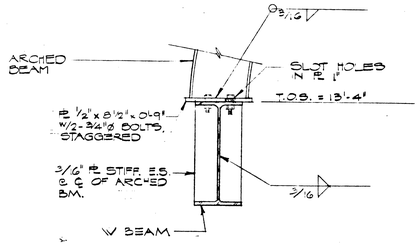

DETAIL 6
1½" = 1'-0"

GUNNY, BRIZENDINE & POGGEMEYER
ENGINEERS PLANNERS
1234 EAST SAHARA AVENUE • LAS VEGAS • NEVADA 89104
838 MARGRAVE DRIVE • RENO • NEVADA 89503 • (702) 329-1701
84133

DATE
DRAWN
CHECKED
JOB NO.

DOBRUSKY KITTRELL GARLOCK
Architects
2520 CAMBRIDGE ST. LAS VEGAS, NEVADA (702) 732-0433

City of Las Vegas
Downtown Transportation Center
Las Vegas, Nevada

SHEET S-8
OF 50 OF 65

FILE NUMBER 590-2J