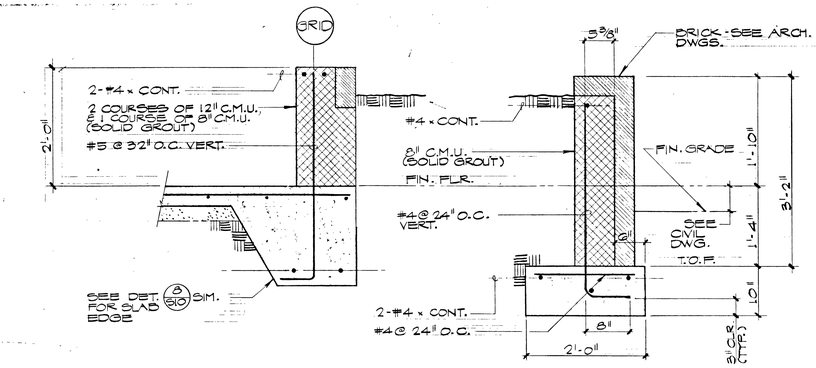

TYP. SECT. @ PLANTER

DETAIL 12

1" = 1'-0"

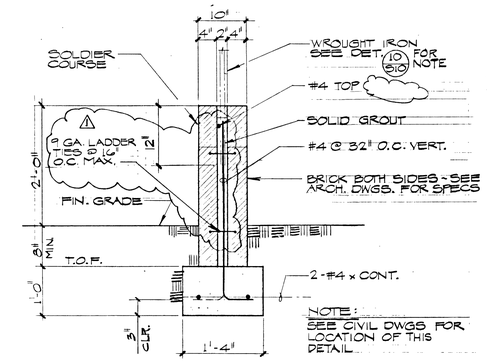

NOTE:
SEE CIVIL DWGS FOR LOCATION OF THIS DETAIL.

TYP. LOW PROFILE BRICK FENCE

DETAIL 9

1" = 1'-0"

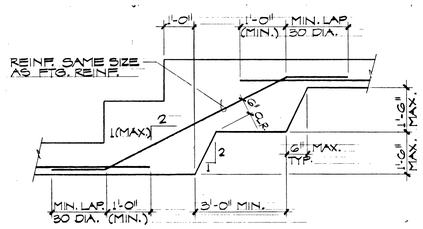

NOTE:
1. WHERE SPLICES OF DIFFERENT SIZE BARS OCCUR, LAP IS BASED ON LARGER DIAMETER; WHERE REINF. CHANGES AT STEPPED FOOTING, USE GREATER REINF. AT SPLICE BARS.
2. WALL REINFORCING AND FOOTING DOWELS ARE NOT SHOWN FOR CLARITY.
3. SEE PLANS FTG. ELEVATIONS AND APPROX. LOCATIONS OF FOOTING STEPS.

TYPICAL STEPPED FTG.

DETAIL 5

NO SCALE

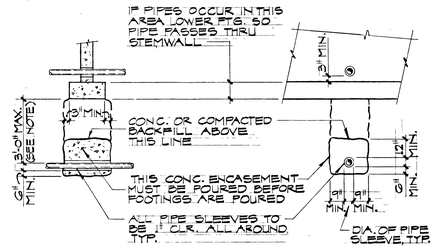

NOTES:
1. FOR PIPES MORE THAN 3'-0" BELOW BOTT. OF FTG., CONC. ENCASEMENT IS NOT REQUIRED COMPACT SOIL TO 90%.
2. SEE MECH. SPECS. FOR CAULKING.
3. BLDG. FTG. CONTRACTOR MAY FORM ENDS OF CONC. ENCASEMENT OR AT HIS OPTION LET CONC. SLOUGH TO NATURAL SLOPE.

TYP. PIPE THRU FOOTING

DETAIL 1

NO SCALE

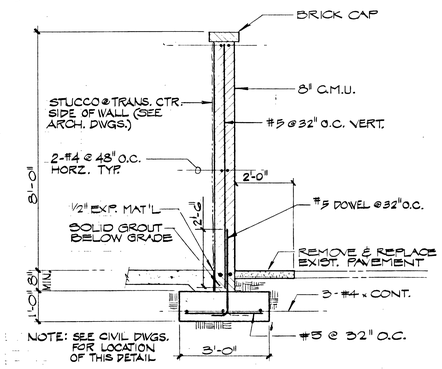

NOTE: SEE CIVIL DWGS. FOR LOCATION OF THIS DETAIL

DETAIL 15

1/2" = 1'-0"

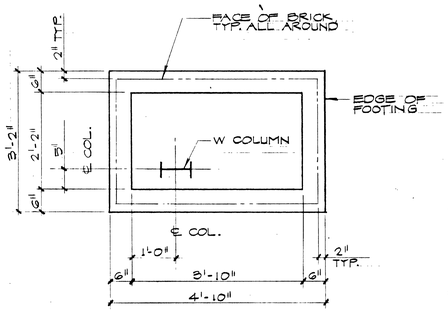

PLAN

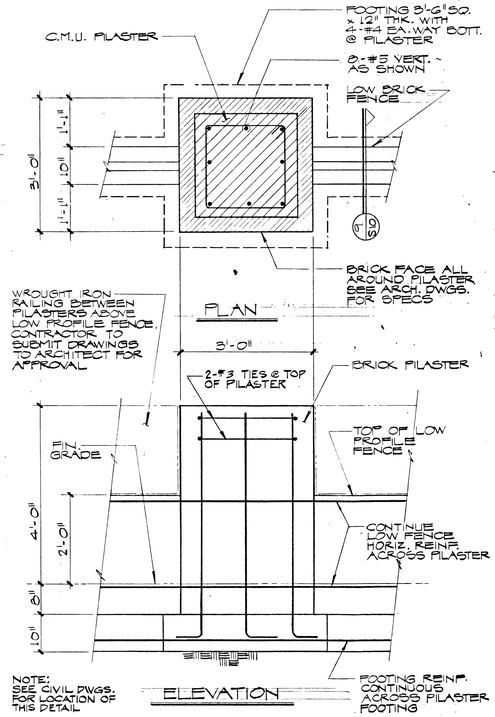

NOTE:
SEE CIVIL DWGS. FOR LOCATION OF THIS DETAIL

ELEVATION

TYP. LOW BRICK FENCE PILASTER

DETAIL 10

3/4" = 1'-0"

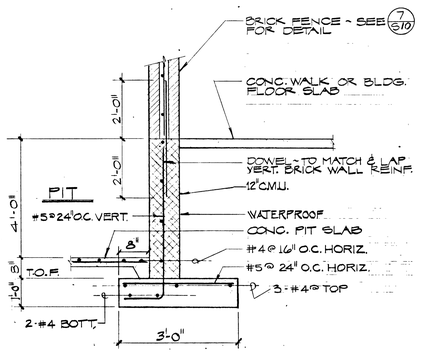

DETAIL 6

1/2" = 1'-0"

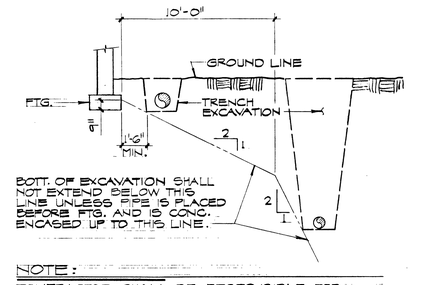

BOTT. OF EXCAVATION SHALL NOT EXTEND BELOW THIS LINE UNLESS PIPE IS PLACED BEFORE FTG. AND IS CONC. ENCASED UP TO THIS LINE.

NOTE:
CONTRACTOR SHALL BE RESPONSIBLE FOR SHORING OR OTHERWISE MAINTAINING THE SIDE SIDES OF THE EXCAVATION FROM CAVE-IN UNTILL ALL BACKFILL IS COMPLETED. BACKFILL IN ACCORDANCE WITH GENERAL NOTES AND SPECIFICATIONS.

TYP. TRENCH @ FOOTING

DETAIL 2

NO SCALE

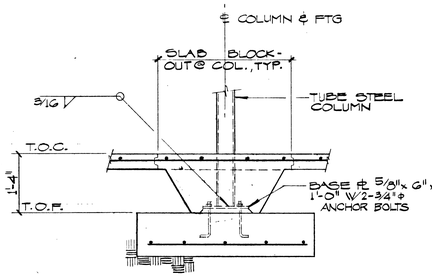

NOTE:
SEE DET. 4/S10 TYP. FOR NOTES EXCEPT AS NOTED

DETAIL 16

3/4" = 1'-0"

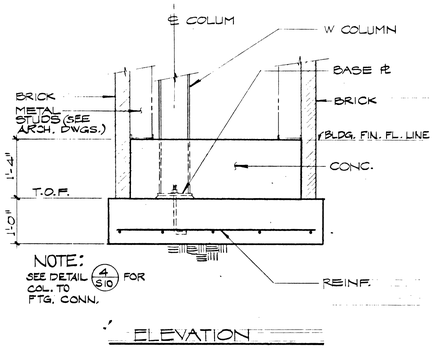

NOTE:
SEE DETAIL 4/S10 FOR COL. TO FTG. CONN.

ELEVATION

DETAIL 13

3/4" = 1'-0"

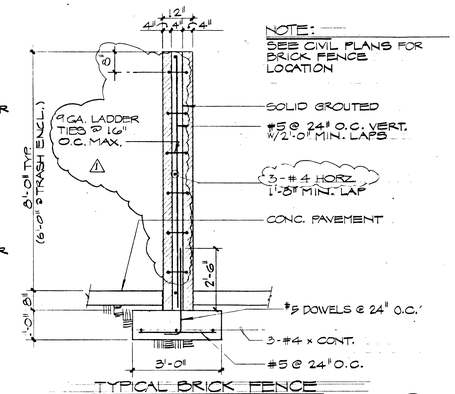

TYPICAL BRICK FENCE

DETAIL 7

1/2" = 1'-0"

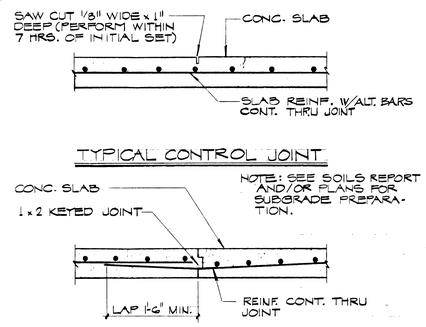

TYPICAL CONTROL JOINT

NOTE: SEE SOILS REPORT AND/OR PLANS FOR SUBGRADE PREPARATION.

TYPICAL CONST. JOINT

NOTE: CONTRACTOR TO USE CONTROL JOINT OR CONST. JT. AT HIS OPTION. JOINTS ARE FOR BLDG SLAB ONLY - SEE CIVIL DWGS. FOR JOINTS IN SITEWORK PAVING

DETAIL 3

NO SCALE

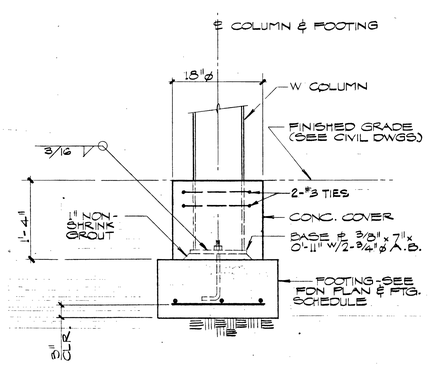

DETAIL 17

1" = 1'-0"

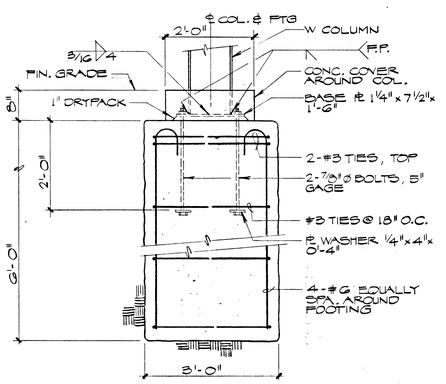

DETAIL 14

3/4" = 1'-0"

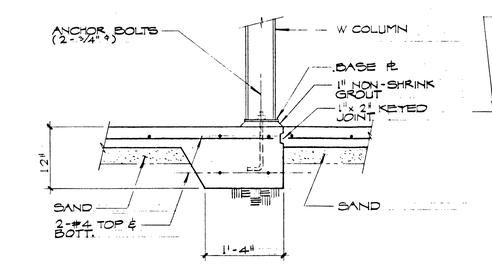

DETAIL 11

1" = 1'-0"

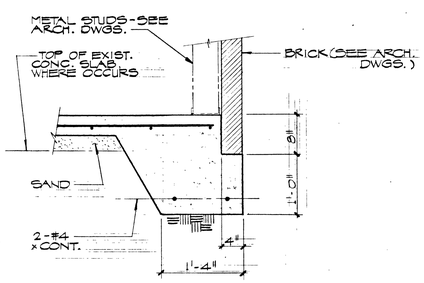

DETAIL 8

3/4" = 1'-0"

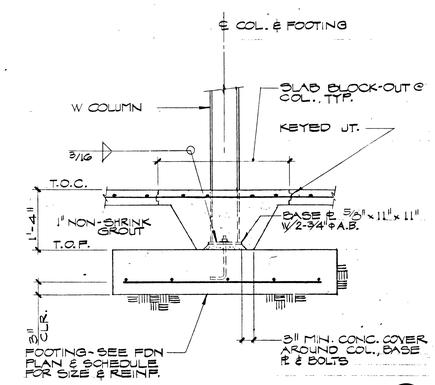

DETAIL 4

NO SCALE

△ REVISED REINF. IN BRICK FENCES DATED 4/30/96

GUNNY, BRIZENDINE & POGGEMEYER
ENGINEERS PLANNERS
1234 EAST BONANZA AVENUE • LAS VEGAS • NEVADA 89101 • (702) 382-1001
835 MARGARET DRIVE • RENO • NEVADA 89502 • (702) 827-1101
84132

DATE
DRAWN: PCG
CHECKED
FOR PLCG.
JOB NO. 95-12-21

DOBRUSKY KITTRELL GARLOCK aia Architects
3333 CAMBRIDGE ST. LAS VEGAS, NEVADA 89109 (702) 733-0433

City of Las Vegas
Downtown Transportation Center
Las Vegas, Nevada

SHEET S-10
OF 52 OF 65
12
FILE NUMBER 590-21

Tabelyne Post - 1813 TELEDAR DRAFTING FILM