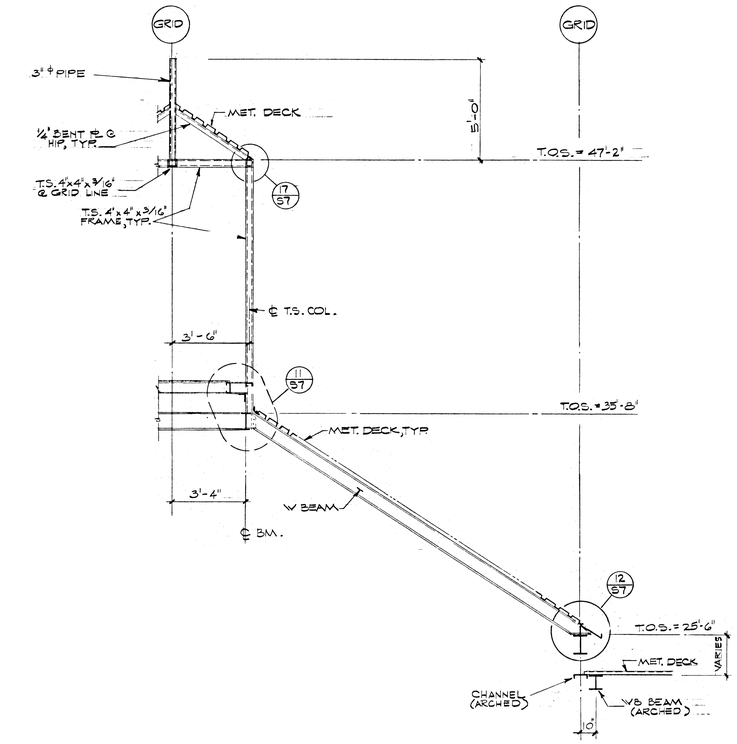

SECTION F
3/8" = 1'-0"

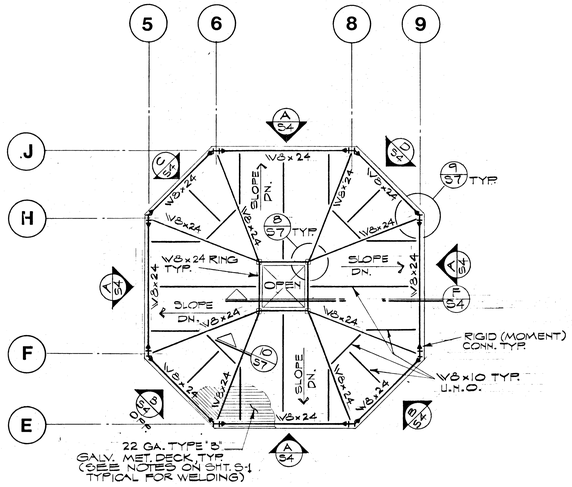

PLAN @ HIGH ROOF

DETAIL 2
1/8" = 1'-0"

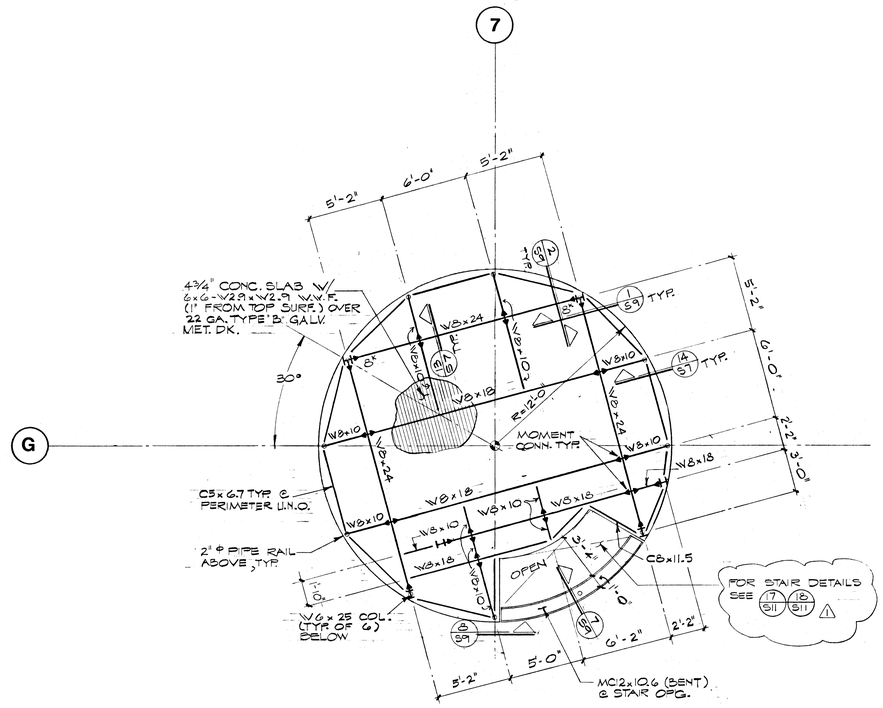

FRAMING PLAN @ 2nd. FLOOR
NOTE: T.O.S. ELEV. = 9'-5 1/4" ABOVE 1st. FLOOR CONC. SLAB, TYP.

DETAIL 1
1/4" = 1'-0"

NORTH

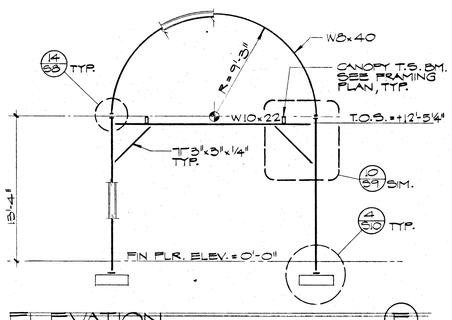

ELEVATION E
3/16" = 1'-0"

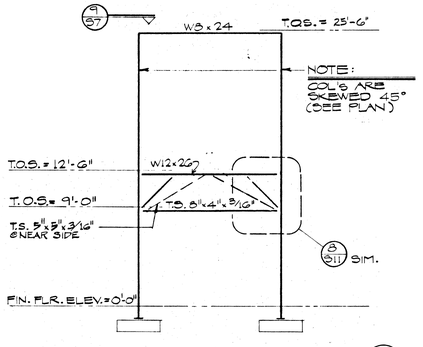

ELEVATION D
3/16" = 1'-0"

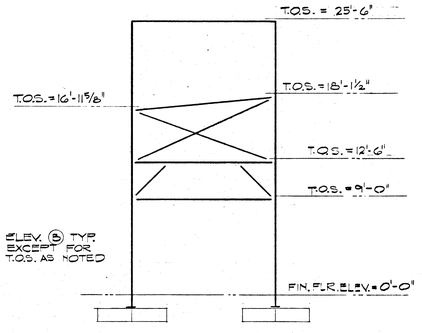

ELEVATION C
3/16" = 1'-0"

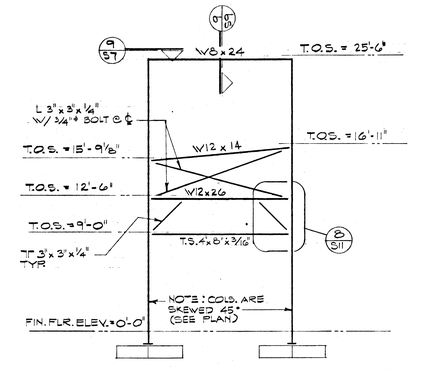

ELEVATION B
3/16" = 1'-0"

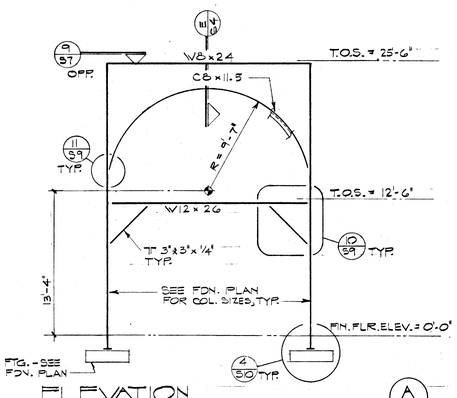

ELEVATION A
3/16" = 1'-0"

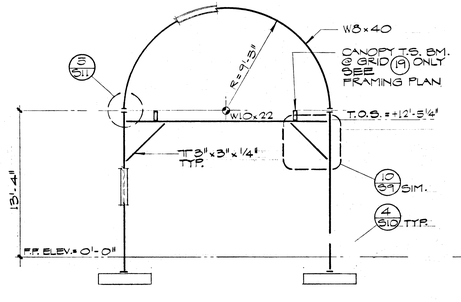

ELEVATION H
3/16" = 1'-0"

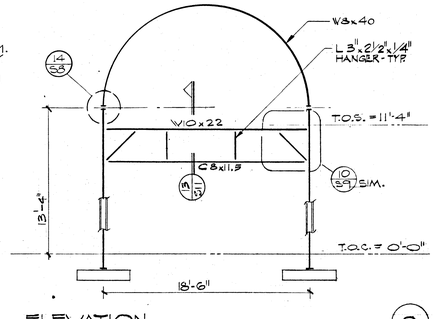

ELEVATION G
3/16" = 1'-0"

11-15-85 ADDENDUM

GUNNY, BRIZENDINE & POGGEMEYER
ENGINEERS PLANNERS
821 MARGARET DRIVE • LAS VEGAS, NEVADA 89106 • (702) 384-9900
821 MARGARET DRIVE • RENO, NEVADA 89503 • (702) 329-7101
8-4133

DATE:
DRAWN: KA
CHECKED: KG
JOB NO. 792-21-01

DOBRUSKY KITTRELL GARLOCK
Architects aia
3553 CAMBRIDGE ST. LAS VEGAS, NEVADA 89109 (702) 733-0433

City of Las Vegas
Downtown Transportation Center
Las Vegas, Nevada

SHEET S-4
OF 46 of 65
FILE NUMBER 590-21

Telecopier Print • 3010 TELECOPIER DIRAFTING FILM