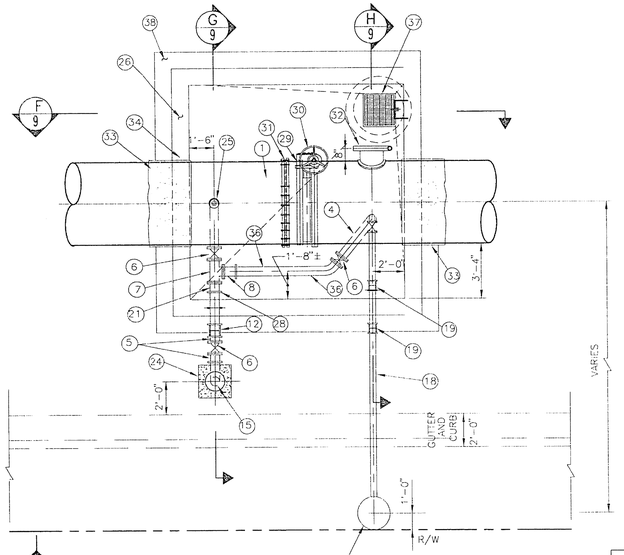


## PIPING PLAN E/9

SCALE: 1/4" = 1'-0"

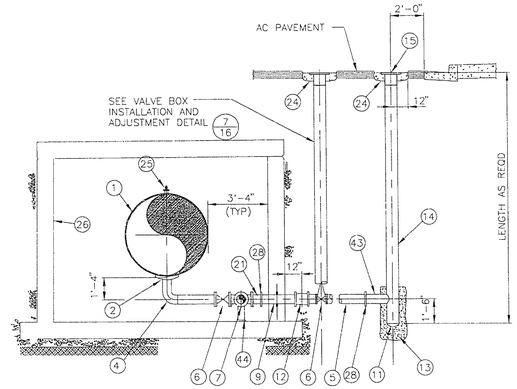


## SECTION G/9

SCALE: 1/4" = 1'-0"

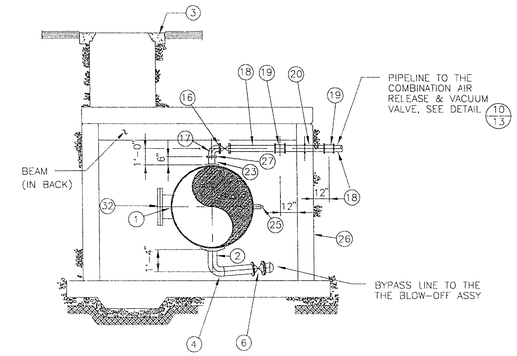


## SECTION H/9

SCALE: 1/4" = 1'-0"

### DESCRIPTIONS

| ITEM | DESCRIPTION | ITEM | DESCRIPTION | ITEM | DESCRIPTION |
|---|---|---|---|---|---|
| 1 | ML PIPE, SEE SPECS, DIVISION 29 | 17 | 4" – 90° WELDED STEEL ELBOW | 32 | 20" ACCESS MANWAY, SEE DETAIL 1 ON SHT 12 |
| 2 | 6" STEEL OUTLET | 18 | 4" DI CLASS 51 PLAIN END x FLANGED PIPE, WRAP W/2 LAYERS OF | 33 | MLC PIPE, SEE SPECS, DIVISION 29 |
| 3 | 10" THICK CONCRETE COLLAR | | POLYETHYLENE FILM PER SPECS | 34 | WALL PENETRATION, SEE DETAIL 3 ON SHT 11 |
| 4 | 6" – 90° STEEL ELBOW W/ WELDED SHORT PIECE WITH FLANGE | 19 | 4" STL COUPLING, DRESSER STYLE 138 OR APPVD EQUAL | 35 | 36" ø MANHOLE FRAME & COVER |
| 5 | 6" SCH 40 MLC STL PIPE | 20 | 4" PLAIN END SCH 40 FABRICATED STL MLC WALL SPOOL W/WALL FLG | 36 | 6" SCH 40 ML WELDED x FLANGED STL PIPE w/ 45° bend |
| 6 | 6" FLANGED GATE VALVE NRS (W/2" SQ OPERATING NUT FOR G.V. OUTSIDE VAULT) | 21 | 6" SCH 40 ML FLANGED & GROOVED END STL PIPE | 37 | 2' SQUARE SUMP, SEE SECTION B ON SHT 8 |
| 7 | 6" STL FLANGED TEE | 22 | GALVANIZED CARBON STEEL LADDER | 38 | CONCRETE FOOTING, SEE SECTION B ON SHT 8 |
| 8 | 6" FLANGED COUPLING ADAPTER, DRESSER STYLE 128 OR APPVD EQUAL | 23 | 4" FLANGED STEEL OUTLET | 39 | PIPE SUPPORT, SEE DETAIL 6 ON SHT 11 |
| 9 | 6" PLAIN & GROOVED END SCH 40 FABRICATED STL MLC WALL SPOOL W/WALL FLG | 24 | 24" SQ x 6" THK CONC COLLAR, CONC TO BE 1/8" TO 1/4" BELOW FINAL | 40 | INSULATING FLANGE, SEE DETAIL 9 ON THIS SHT |
| 10 | 1-1/2" ø VALVE STEM EXTENSION W/UNIVERSAL JOINT AT VALVE AND NEAR | | STREET GRADE | 41 | VALVE BOX IN VAULT, SEE DETAIL 7 ON SHT 13 |
| | TOP OF VAULT – GOES UP THROUGH ROOF TO STREET | 25 | CORP STOP, SEE DETAIL 8 ON THIS SHT | 42 | 36" PRECAST MANHOLE SECTIONS SEE SECTION C ON SHT 8 |
| 11 | 8" STL BUMPED HEAD | 26 | VAULT WALL | 43 | 6" SCH 40 MECHANICAL COUPLING X PLAIN END MLC PIPE |
| 12 | 6" STL COUPLING, DRESSER STYLE 38 OR APPVD EQUAL | 27 | 4" STEEL WELDING NECK FLANGE | 44 | PIPE SUPPORT BY GRINNEL OR APPROVED EQUAL |
| 13 | ENCASE BUMPED HEAD IN 4" CONCRETE ALL AROUND | 28 | 6" MECHANICAL COUPLING | | |
| 14 | 8" SCH 30 MLC STL PIPE | 29 | BUTTERFLY VALVE | | |
| 15 | BLOW-OFF COVER ASSEMBLY, SEE DETAIL 2 ON SHT 14 | 30 | BUTTERFLY VALVE OPERATOR | | |
| 16 | 4" FLANGED GATE VALVE | 31 | FLANGED COUPLING ADAPTER | | |

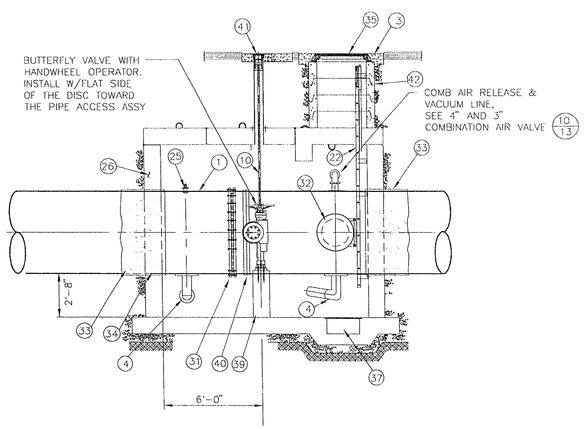


## PIPING PROFILE F/9

SCALE: 1/4" = 1'-0"

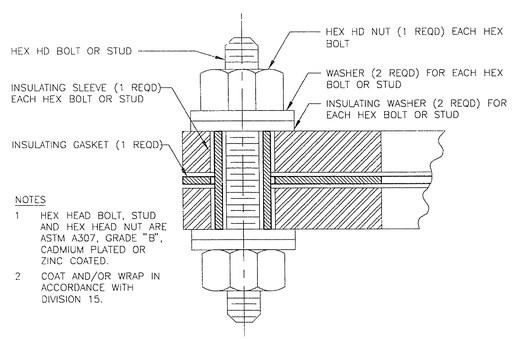


NOTES

1. HEX HEAD BOLT, STUD AND HEX HEAD NUT ARE ASTM A307, GRADE "B", CADMIUM PLATED OR ZINC COATED.
2. COAT AND/OR WRAP IN ACCORDANCE WITH DIVISION 15.

## INSULATING FLANGE DETAIL 9/–

NOT TO SCALE

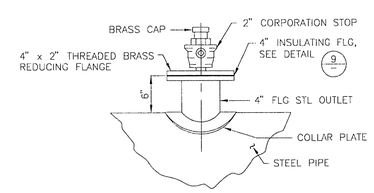


## CORP STOP DETAIL 8/–

NOT TO SCALE

LAS VEGAS VALLEY WATER DISTRICT

G.C. WALLACE, INC.
Engineering/Architecture
1555 SOUTH RAINBOW BLVD/LAS VEGAS, NEVADA 89102

VERIFY SCALE
BAR REPRESENTS ONE AND ONE-HALF INCHES ON ORIGINAL

3205 ZONE RESERVOIR INLET/OUTLET PIPELINE
60" VALVE VAULT PIPING PLAN
STA. 25+00.00

SCALE 1"=1'

C:/DWG/320510/INOU-D2.DWG Plot @ 03-15-96 11:40AM

DRAWN BY: LUPE GRACIA/ANGELA RISAGER 09/95
CHECKED BY: RON CHAPMAN 12/08/95
RECOMMENDED BY: HOWARD VANDER MEER R.P.E. NO. 4534 DATE 3-19-96
ACCEPTED BY: R.P.E. NO. DATE

REGISTERED PROFESSIONAL ENGINEER STATE OF NEVADA HOWARD K. VANDER MEER CIVIL 4534

CONTRACT NUMBER 770

DRAWING NUMBER D2
SHEET 9 OF 19

565-283

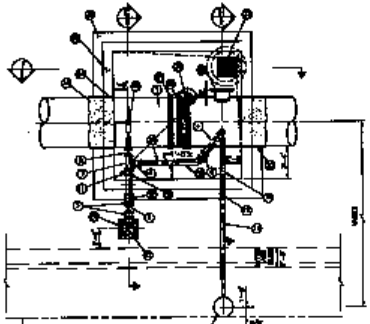

NORTH

STA. 25+00.00

PIPING PLAN

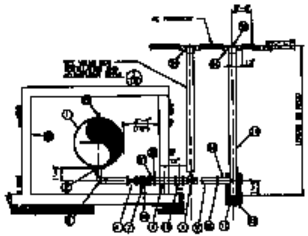

SECTION

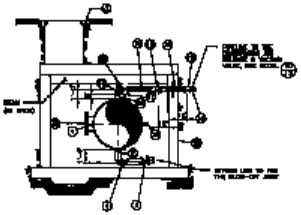

SECTION

| ITEM | DESCRIPTION | ITEM | DESCRIPTION | ITEM | DESCRIPTION |
|---|---|---|---|---|---|
| 1 | [illegible] | 17 | [illegible] | 29 | [illegible] |
| 2 | [illegible] | 18 | [illegible] | 30 | [illegible] |
| 3 | [illegible] | 19 | [illegible] | 31 | [illegible] |
| 4 | [illegible] | 20 | [illegible] | 32 | [illegible] |
| 5 | [illegible] | 21 | [illegible] | 33 | [illegible] |
| 6 | [illegible] | 22 | [illegible] | 34 | [illegible] |
| 7 | [illegible] | 23 | [illegible] | 35 | [illegible] |
| 8 | [illegible] | 24 | [illegible] | 36 | [illegible] |
| 9 | [illegible] | 25 | [illegible] | 37 | [illegible] |
| 10 | [illegible] | 26 | [illegible] | 38 | [illegible] |
| 11 | [illegible] | 27 | [illegible] | 39 | [illegible] |
| 12 | [illegible] | 28 | [illegible] | 40 | [illegible] |
| 13 | [illegible] | 29 | [illegible] | 41 | [illegible] |
| 14 | [illegible] | 30 | [illegible] | 42 | [illegible] |
| 15 | [illegible] | 31 | [illegible] | 43 | [illegible] |
| 16 | [illegible] | 32 | [illegible] | 44 | [illegible] |

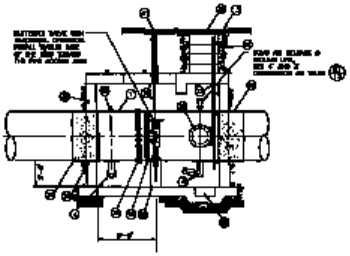

PIPING PROFILE

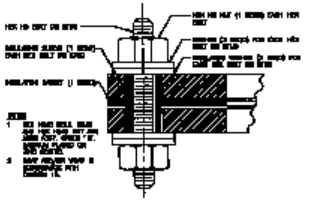

INSULATING FLANGE DETAIL

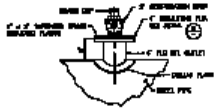

CORP STOP DETAIL

LAS VEGAS VALLEY WATER DISTRICT

W.C. WALLACE, INC.

VERIFY SCALE

3000 ZONE RESERVOIR INLET/OUTLET PIPELINE

STA. 25+00.00

770