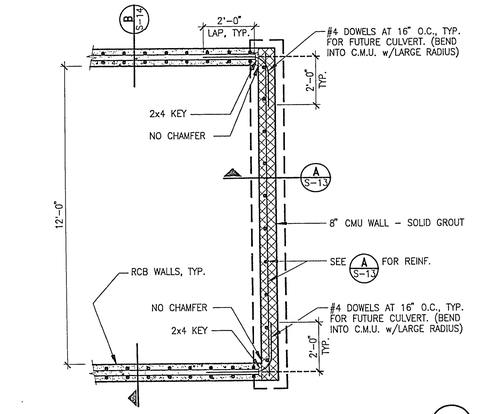

PLAN (1)

SCALE : 3/8" = 1'-0"

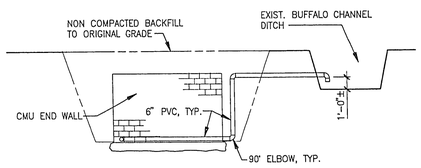

INLET WALL ELEVATION (5)

SCALE : 1/8" = 1'-0"

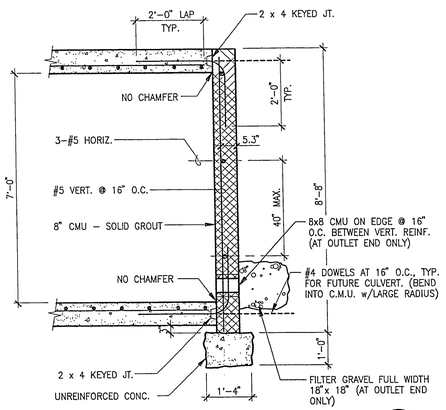

SECTION (A)

SCALE : 1/2" = 1'-0"

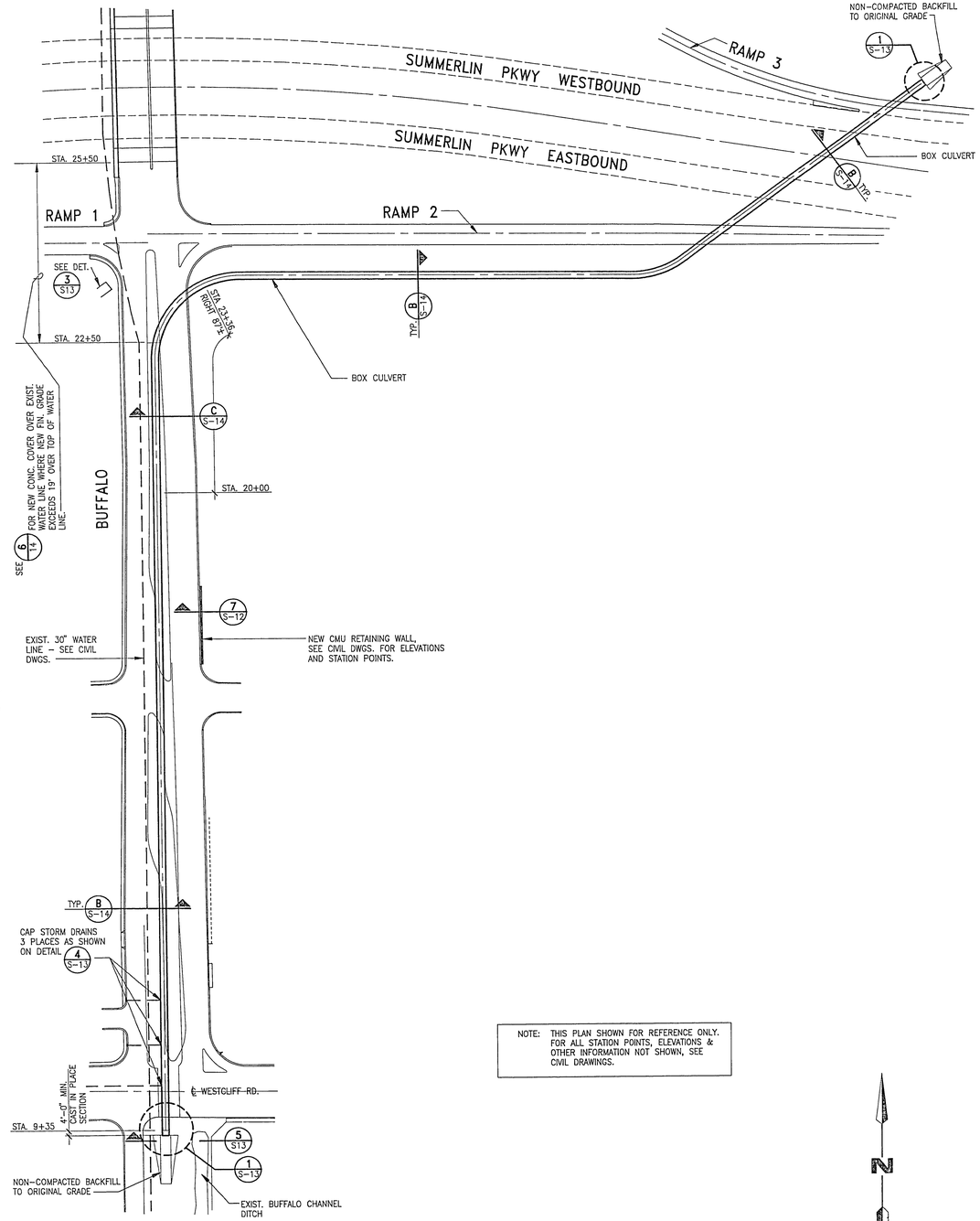

NOTE: THIS PLAN SHOWN FOR REFERENCE ONLY. FOR ALL STATION POINTS, ELEVATIONS & OTHER INFORMATION NOT SHOWN, SEE CIVIL DRAWINGS.

REF. PLAN

SCALE : 1" = 100'

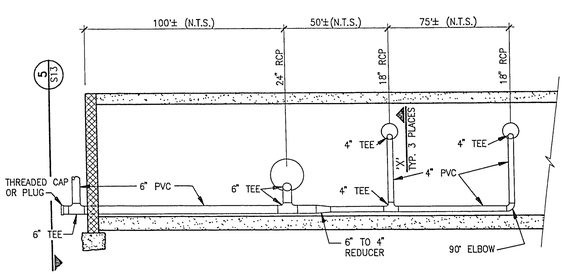

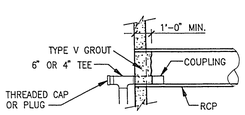

SECTION 'X'

NOTE:

1. SEE CIVIL DWGS. FOR EXACT LOCATION OF STORM DRAIN INLETS.
2. ALL PVC PIPING IS SCHEDULE 40, TYP.
3. CAPS OR PLUGS ARE TO REMOVE TRASH AT INLETS.

RCB INTERCEPT DRAINS (4)

SCALE : 1/4" = 1'-0"

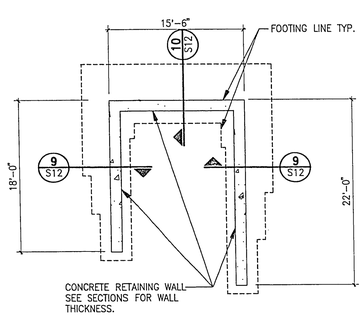

NOTE:
SEE CIVIL DRAWINGS FOR RETAINING WALL LOCATION.

RETAIN'G WALL FOR UTILITY VAULT (3)

SCALE : 1/8" = 1'-0"

REV	DATE	DESCRIPTION
	1/9/92	RELEASED FOR BIDDING
1	6/3/92	CHANGE ORDER #1
2	10/14/92	REVISE RCB INLET & OUTLET

JOB NO.	89072	
DESIGNED BY	GAB	
DRAWN BY	KEP	
CHECKED BY	GAB	
DATE	4/23/91	

GBG CONSULTING ENGINEERS
3650 S. EASTERN AVE. • SUITE 220 • LAS VEGAS, NEVADA 89109
CONSULTANT

REGISTERED PROFESSIONAL ENGINEER STATE OF NEVADA
GEORGE A. BRILZENDORFER
CIVIL STRUCTURAL
No. 7152
10-26-92

BOX CULVERT PLAN/DETAILS
BUFFALO INTERCHANGE
with SUMMERLIN PARKWAY
and BUFFALO DRIVE ROADWAY BETWEEN WESTCLIFF AND WASHINGTON
CITY of LAS VEGAS, NEVADA

SHEET NUMBER
S-13
of 14

89072R3\S13 PLOTTED BY: LWA DATE: 10/19/92 TIME: 12:28 SCALE FACTOR: 1=1

107-V1753