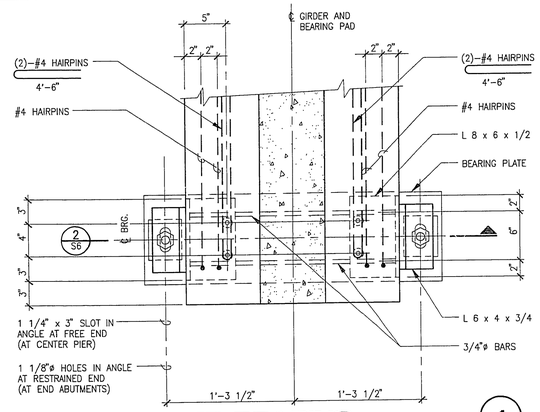

PLAN at GIRDER BEARING (1)

SCALE : 1 1/2" = 1'–0"

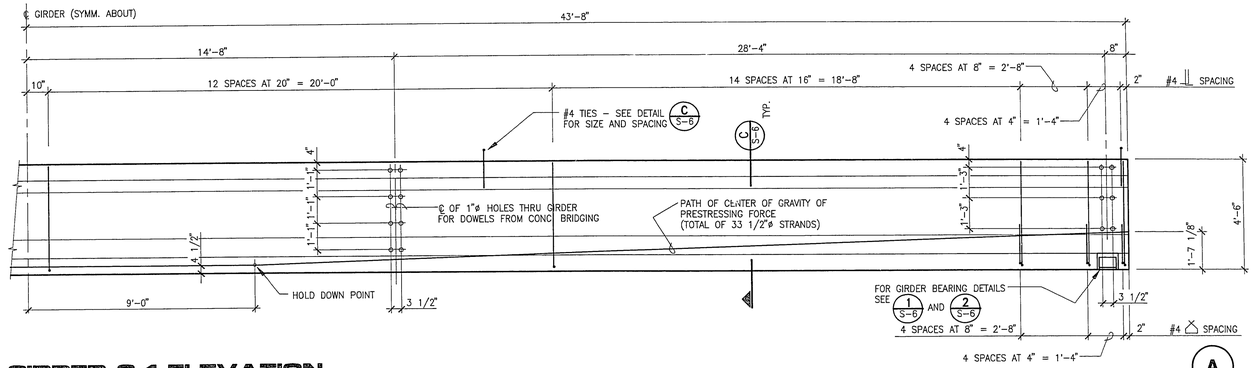

GIRDER G-1 ELEVATION (A)

SCALE : 3/8" = 1'–0"

NOTES :

1. CONCRETE FOR PRESTRESSING MEMBERS SHALL BE CLASS PAA, WITH AN AIR ENTRAINMENT OF 4% TO 7%. ULTIMATE COMPRESSIVE STRENGTH AT TRANSFER (f'ci) SHALL BE 4500 P.S.I. MINIMUM AND ULTIMATE COMPRESSIVE STRENGTH AT AGE 28 DAYS (f'c) SHALL BE 6000 P.S.I. MINIMUM.
2. PRESTRESSED REINFORCING SHALL BE 1/2"ø 7 WIRE, UNCOATED, STRESS RELIEVED LOW RELAXATION STRAND, CLEAN AND FREE FROM CORROSION CONFORMING TO THE FOLLOWING :
   ASTM DESIGNATION A–416
   ULTIMATE STRENGTH 270 KSI
3. REINFORCING STEEL FOR STIRRUPS SHALL BE ASTM A–615, GRADE 60.
4. DRAPES SHALL CONFORM TO CONTROLLING POINTS SHOWN ON DRAWINGS. DIMENSIONS LOCATE THE CENTER OF GRAVITY OF THE GROUP OF TENDONS.
5. THE FINAL FORCE (Pf) REMAINING AFTER LOSSES IN THE PRESTRESSING STEEL DUE TO CREEP AND SHRINKAGE OF CONCRETE, ELASTIC SHORTENING, AND RELAXATION OF THE PRESTRESSING STEEL SHALL BE AS FOLLOWS:
   GIRDER G–1 793 KIPS
   GIRDER G–2 804 KIPS
   GIRDER G–3 815 KIPS
6. CAMBER AT MID–POINT OF GIRDER SHALL BE AS FOLLOWS:
   GIRDER G–1 1.18 INCHES
   GIRDER G–2 1.25 INCHES
   GIRDER G–3 1.25 INCHES

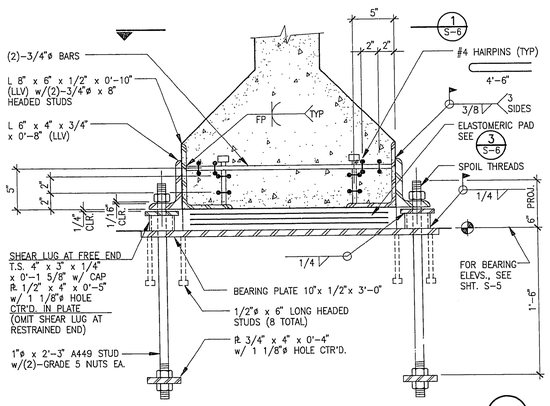

SECTION at GIRDER BEARING (2)

SCALE : 1 1/2" = 1'–0"

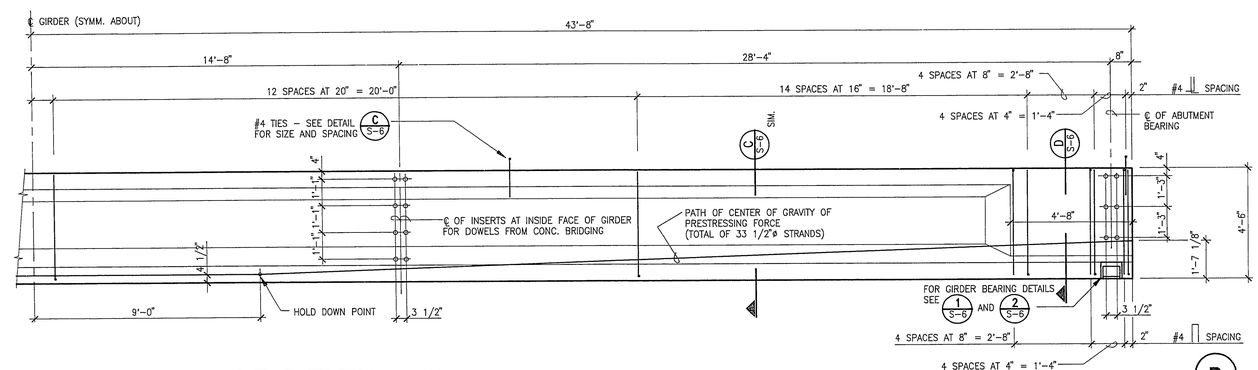

GIRDERS G-2 and G-3 ELEVATION (B)

SCALE : 3/8" = 1'–0"

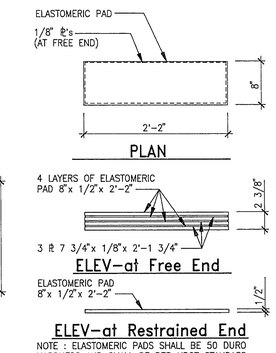

NOTE : ELASTOMERIC PADS SHALL BE 50 DURO HARDNESS AND SHALL BE PER NDOT STANDARD SPEC. 502.03.13(f)

BRG. PADS (3)

NO SCALE

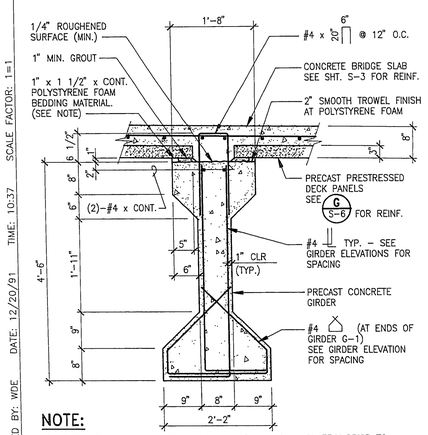

NOTE:

1. GROUT @ DECK PANEL BEARING SHALL BE PLACED IMMEDIATELY PRIOR TO PLACING PRECAST DECK PANELS.
2. HIGH–DENSITY EXPANDED POLYSTYRENE FOAM BEDDING MATERIAL SHALL CONFORM TO THE FOLLOWING SPECS.: COMPRESSION STRENGTH 60 P.S.I. MIN., WATER ABSORPTION 0.125#PER S.F. MAX. AND OXYGEN INDEX 24 MIN. AND SHALL BE IN ACCORDANCE WITH ASTM D–1621 (MIL–P–19644C). CEMENT INTO PLACE PER FOAM MANUFACTURER'S RECOMMENDATIONS.

SECTION (C)

SCALE : 3/4" = 1'–0"

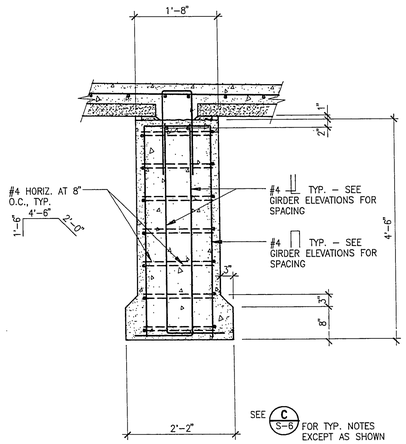

SECTION (D)

SCALE : 3/4" = 1'–0"

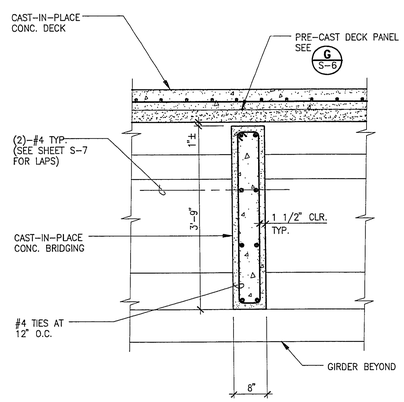

BRIDGING @ GIRDER 1/3 POINTS

SECTION (E)

SCALE : 3/4" = 1'–0"

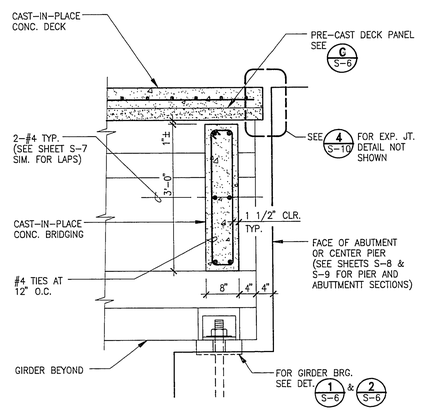

BRIDGING AT GIRDER ENDS

SECTION (F)

SCALE : 3/4" = 1'–0"

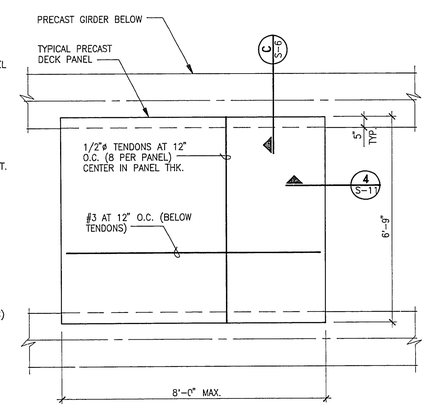

NOTE:
ROUGHEN TOP SURFACE 1/4" MIN. (SURFACE TO BE CLEAN AND FREE OF DEBRIS WHEN CONC. SLAB IS PLACED.)

PRECAST DECK PANEL (G)

SCALE : 1/2" = 1'–0"

REV	DATE	DESCRIPTION
	1-9-92	RELEASED FOR PAYMENT

DWG NO. 89072
DESIGNED BY GAB
DRAWN BY KEP
CHECKED BY GAB
DATE 12/23/90

GB&U CONSULTING ENGINEERS
3650 S. EASTERN AVE. • SUITE 220 • LAS VEGAS, NEVADA 89109

GIRDER ELEV./SECTIONS/DET.
BUFFALO INTERCHANGE
with SUMMERLIN PARKWAY
and BUFFALO DRIVE ROADWAY BETWEEN WESTCLIFF AND WASHINGTON
CITY of LAS VEGAS, NEVADA

SHEET NUMBER
S-6
OF 14

107–V1753

89072\S06 PLOTTED BY: WDE DATE: 12/20/91 TIME: 10:37 SCALE FACTOR: 1=1