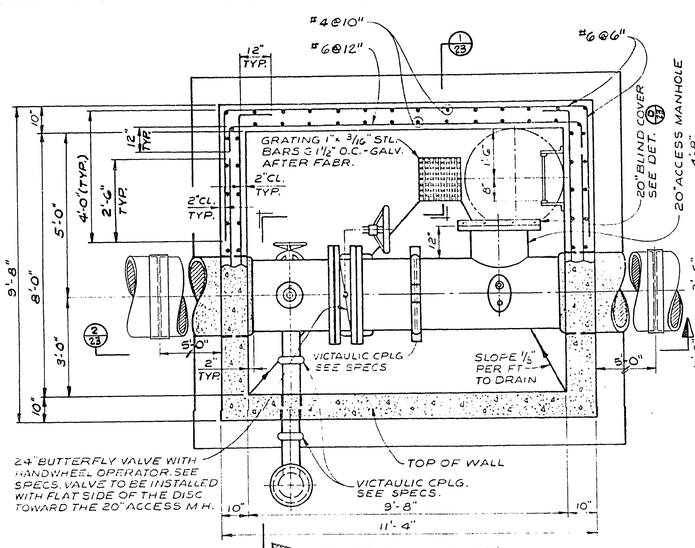

SECTIONAL PLAN
SCALE: 1/2" = 1'-0"

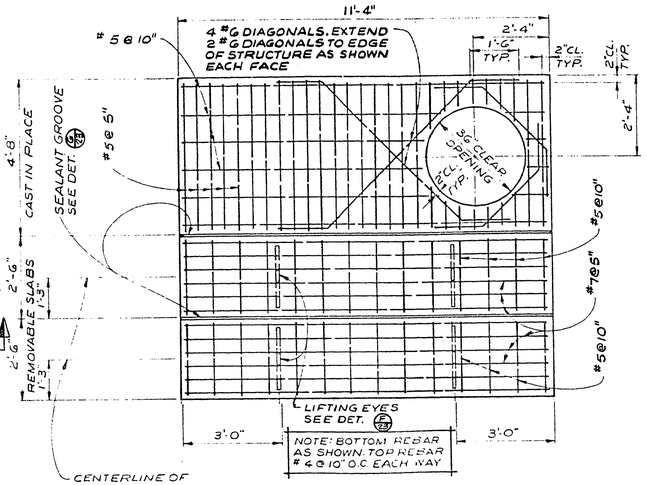

SECTION
SCALE: 1/2" = 1'-0"

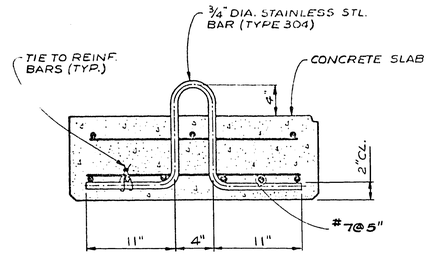

LIFTING EYE DETAIL
SCALE: 1 1/2" = 1'-0"

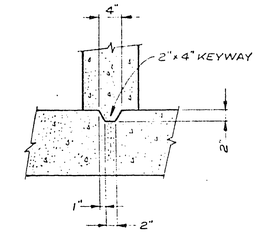

TYP. CONSTR. JOINT
SCALE: 1" = 1'-0"

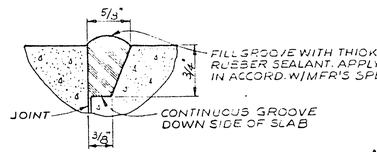

SEALANT GROOVE DETAIL
FULL SCALE

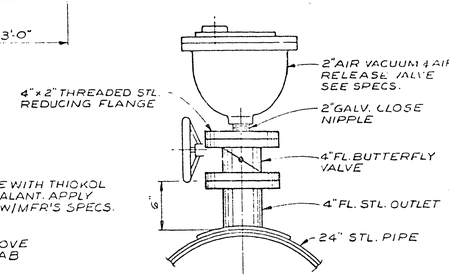

AIR VAC. & AIR REL. VALVE ASSY.

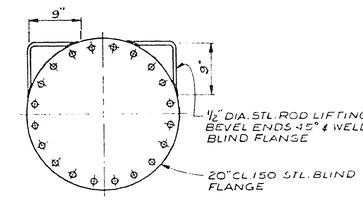

ACCESS MANHOLE COVER
SCALE: 1" = 1'-0"

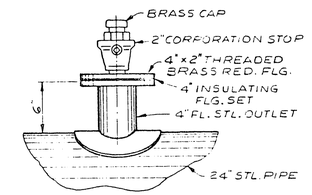

CORP. STOP DETAIL

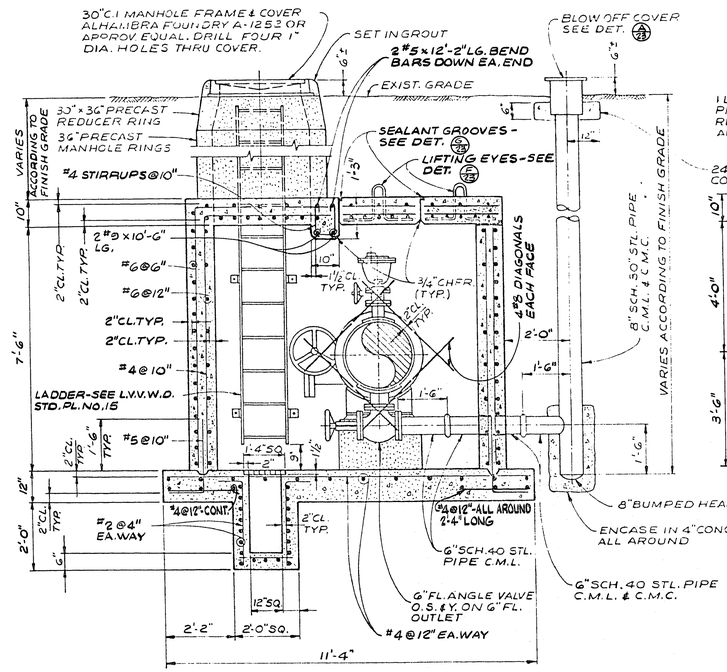

SECTION
SCALE: 1/2" = 1'-0"

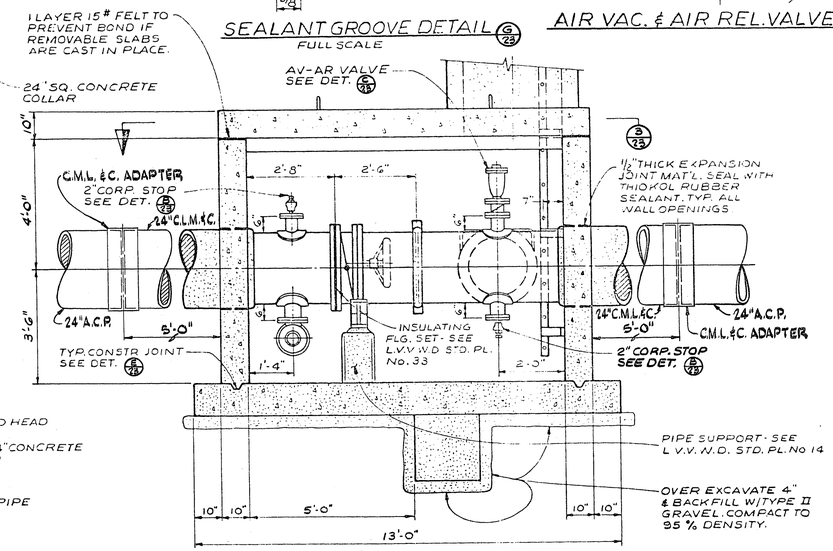

SECTION
SCALE: 1/2" = 1'-0"

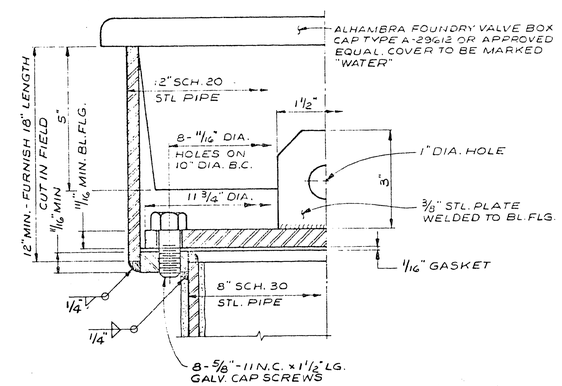

BLOW OFF COVER DETAIL
NOT TO SCALE

CONCRETE PROTECTION FOR REINFORCEMENT

The following minimum concrete cover shall be provided for reinforcement:

	Minimum Cover, in.
Concrete cast against and permanently exposed to earth	3
Concrete exposed to earth or weather	
Principal reinforcement	2
Stirrups, ties	1-1/2
Concrete not exposed to weather or in contact with the ground	
Principal reinforcement	1-1/2
Stirrups, ties and spirals	1

NOTE:
REBAR SCHEDULE PER L.V.V.W.D. SPECIFICATIONS.

APPROVALS:

C.L.V. ENGINEER — DATE 5/22/79
C.L.V. FIELD OPERATIONS ENG'R. — DATE N/A
LAS VEGAS VALLEY WATER DISTRICT — DATE 5-21-79
C.L.V. SANITATION SUPERINTENDENT — DATE 4-24-79
C.L.V. QUALITY CONTROL ENG'R. — DATE 5-22-79

KEY	DATE	DESCRIPTION

RECOMMENDED: G. C. WALLACE
R.E. NO. 5794 DATE 4/19/79

G. C. WALLACE
Consulting Engineers, Inc.
1100 East Sahara Ave. • Las Vegas, Nevada 89104 • 732-3330

BECKER & SONS
CHARLESTON HEIGHTS — TRACT NO. 57A
24" VALVE VAULT STRUCTURE

SHEET 23 OF 23 SHEETS

433.012

8/78 DIETERICH-POST 65320

567 4-1040-57 A