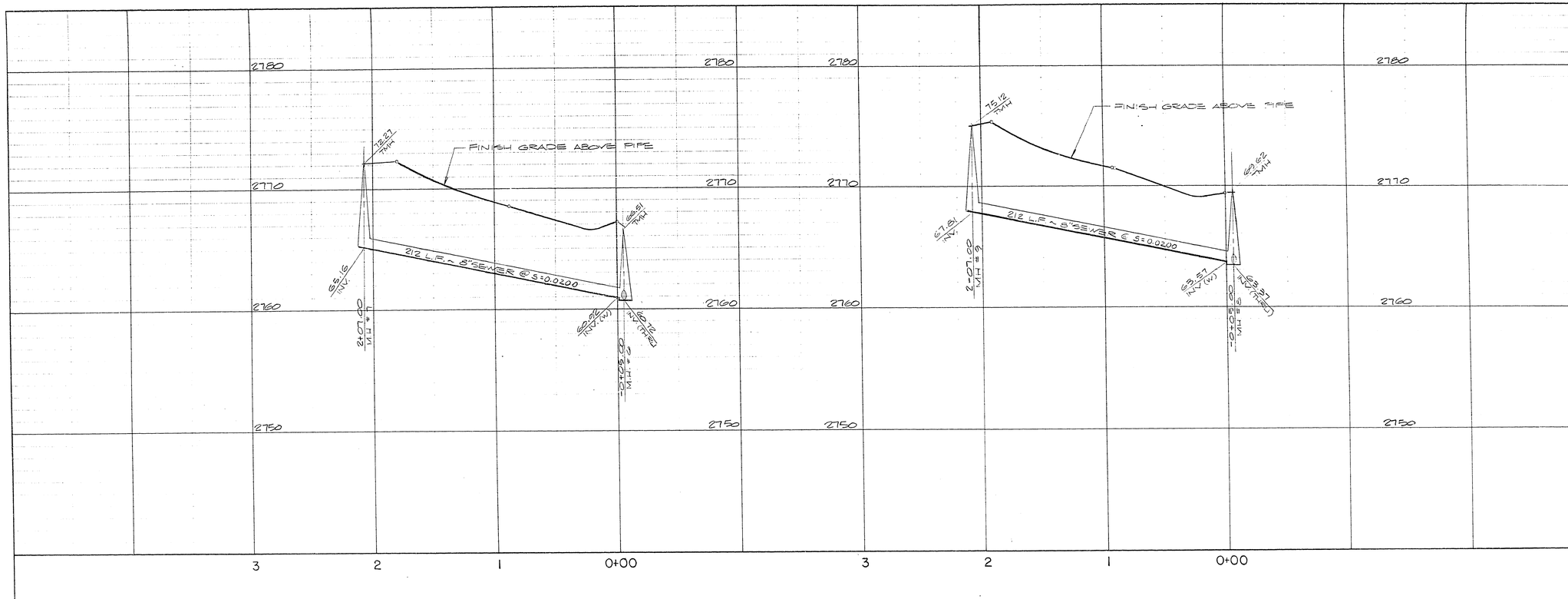

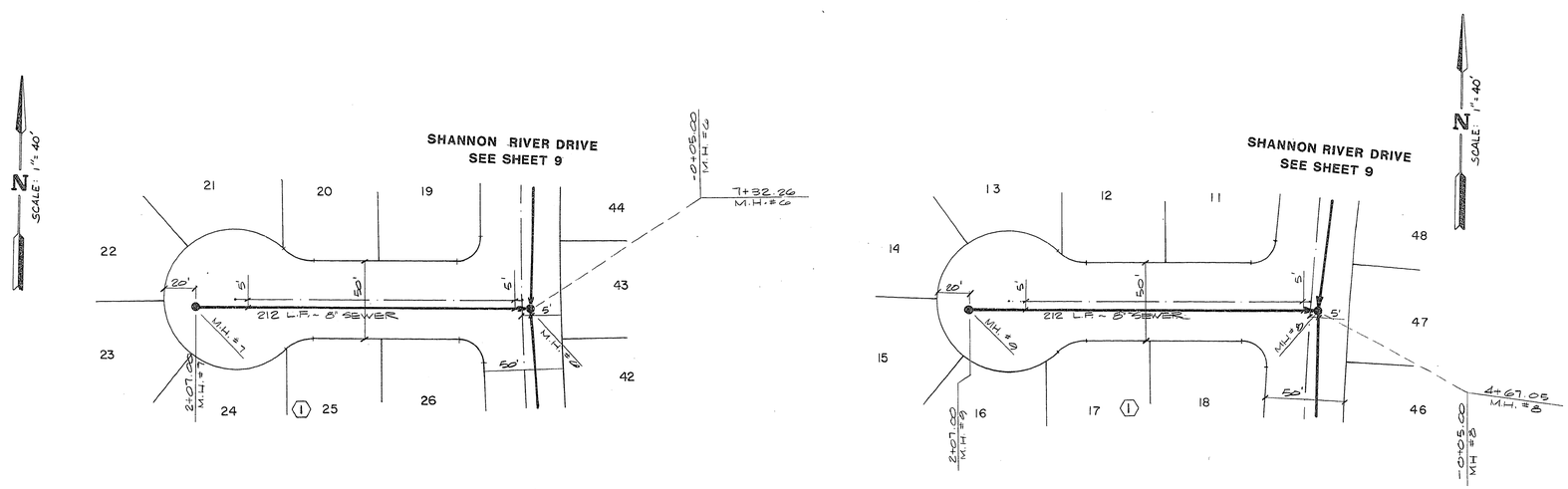

ANCHOR COVE COURT

EMERALD COVE COURT

R.A. Anton 7-9-86
C.L.V. SANITATION ENGINEER DATE

REV	DATE	BY	REVISION
1	6-30-86	PWD	REVISED VALVES & MANHOLES

ENGINEERS & SURVEYORS INCORPORATED
7022 W. CHARLESTON BLVD.
LAS VEGAS, NEVADA 89117
PHONE: 702 / 363-8415

SUBMITTED BY:

TITLE: SEWER PLAN & PROFILE (ANCHOR COVE COURT & EMERALD COVE COURT)

PROJECT: BEACON POINT UNIT NO. 2

WO NO. 4044
BY T.B & PC
DATE 5/86
SCALE 1" = 40'

SHEET 8 OF 12 SHEETS

17-6-73 307Y-846-2