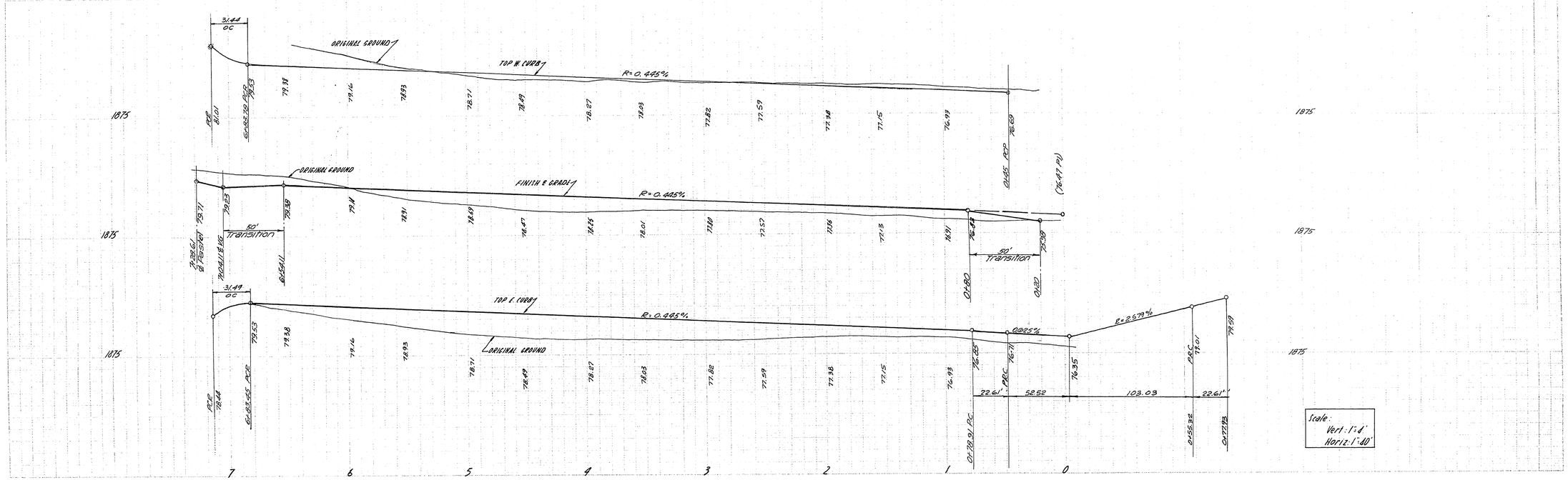

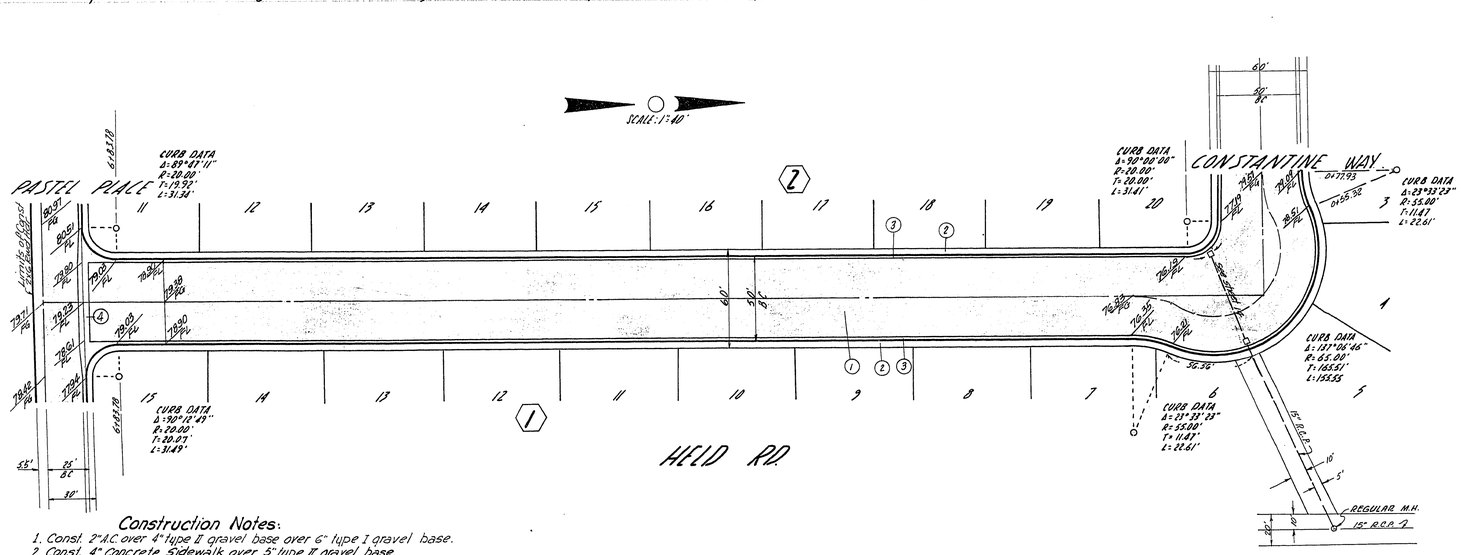

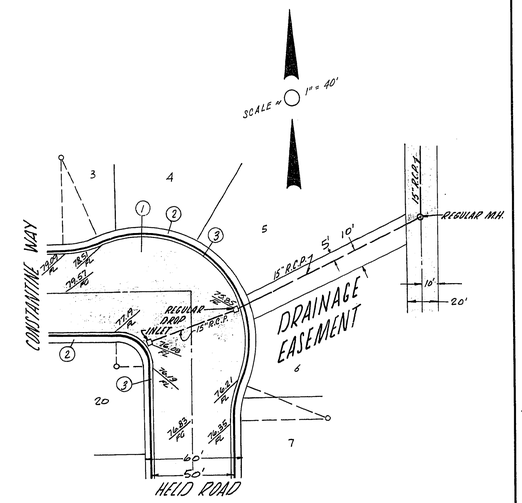

Construction Notes:

1. Const. 2" A.C. over 4" type II gravel base over 6" type I gravel base.
2. Const. 4" Concrete Sidewalk over 5" type II gravel base.
3. Const. type "L" curb & gutter.
4. Const. Standard valley gutter.
5. For details see sheet Nº 1.

Note: All dimensions are to back of curb.

SUBMITTED BY VICTOR G. KRAMETBAUER R.C.E. 1514 APPROVED BY 12-21-62 CITY ENGINEER R.C.E. 396	BRUCE GARDENS UNIT Nº 1 STREET PLANS HELD RD.	SHEET 6 of 14

SAR 12-12-62

1074-985

21-64

WESTMINSTER BLUEPRINT CO. P & P NO. 1