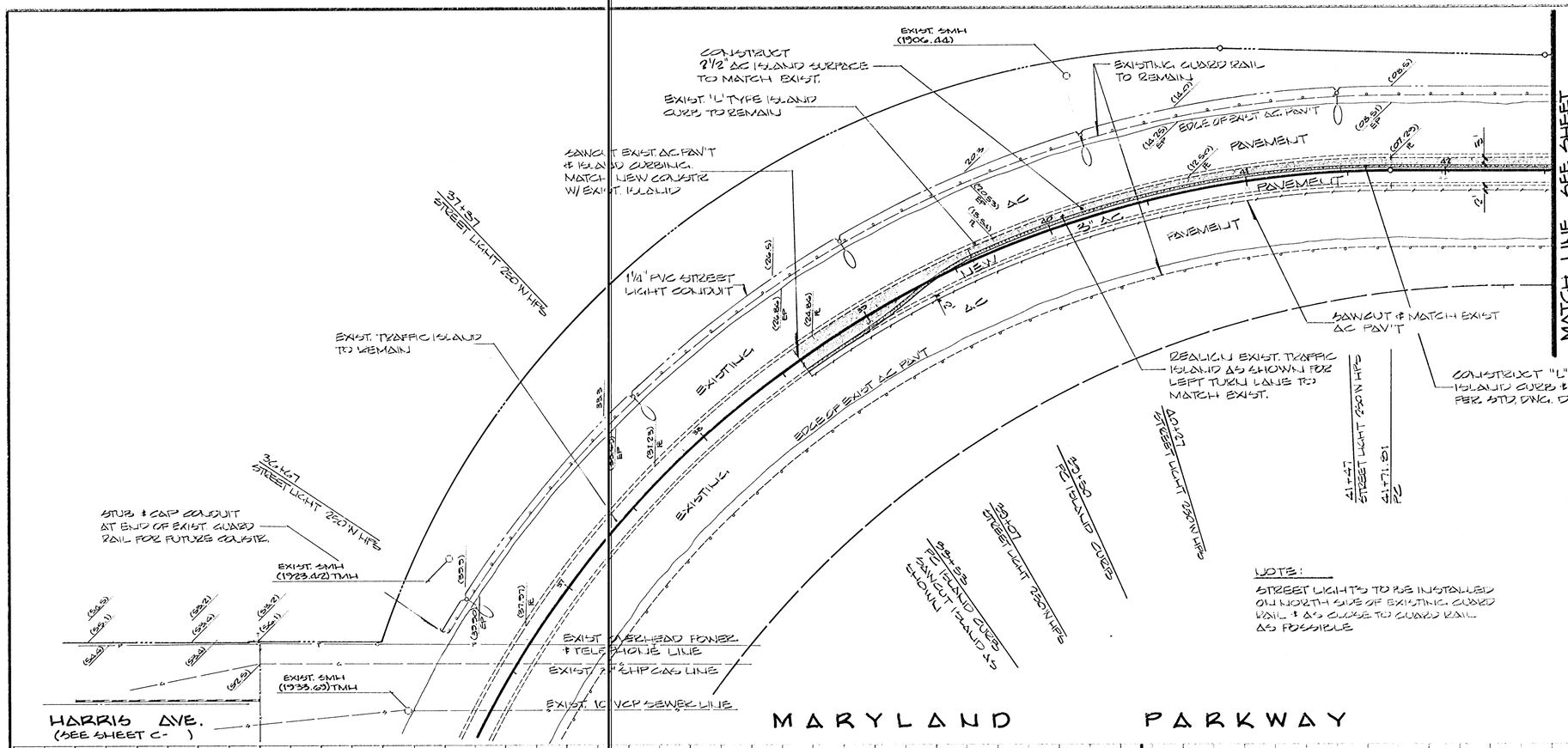

NOTE:

STREET LIGHTS TO BE INSTALLED ON NORTH SIDE OF EXISTING GUARD RAIL & AS CLOSE TO GUARD RAIL AS POSSIBLE

SCALE HORIZ 1" = 30' VERT 1" = 3'

BENCH MARK

NEVADA HIGHWAY DEPT. BRASS CAP IN TOP OF CURB AT THE SW CORNER OF LAS VEGAS BLVD. NORTH & WASHINGTON AVE.
ELEVATION 1942.396
(ELEV. ESTABLISHED BY G.C. WALLACE ENGRS. DECEMBER 1980).
DATUM UNKNOWN.

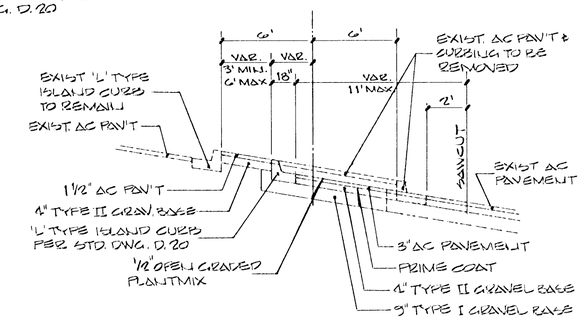

STREET SECTION
MARYLAND PARKWAY

APPROVALS

CLV TRAFFIC ENG.R.	DATE
CLV FIRE MARSHAL	DATE
CLV ELECTRICAL COORDINATOR	DATE
CLV QUALITY CONTROL ENG.R.	DATE
CLV ENGINEER	DATE

APP'D
REVISIONS
GATE NO

PREPARED FOR: GEORGE TATE & ASSOC.

DATE OCT. 1981
DESIGN GWA
DRAWN AWM
CHECK GWA
SCALE H 1"=30', V 1"=3'

BAUGHMAN & TURNER
CIVIL ENGINEERS MINING ENGINEERS LAND SURVEYORS
2323 WEST CHARLESTON BOULEVARD LAS VEGAS, NEVADA 89102
702 - 870-2771

STREET DESIGN
MARYLAND PARKWAY
SECTION 26, TOWNSHIP 20 SOUTH, RANGE 61 EAST, M.D.B. & M.
CITY OF LAS VEGAS
CASHMAN SPORTS & CONVENTION COMPLEX

SHEET C19 OF

PROJ. NO 107-V1206

126282