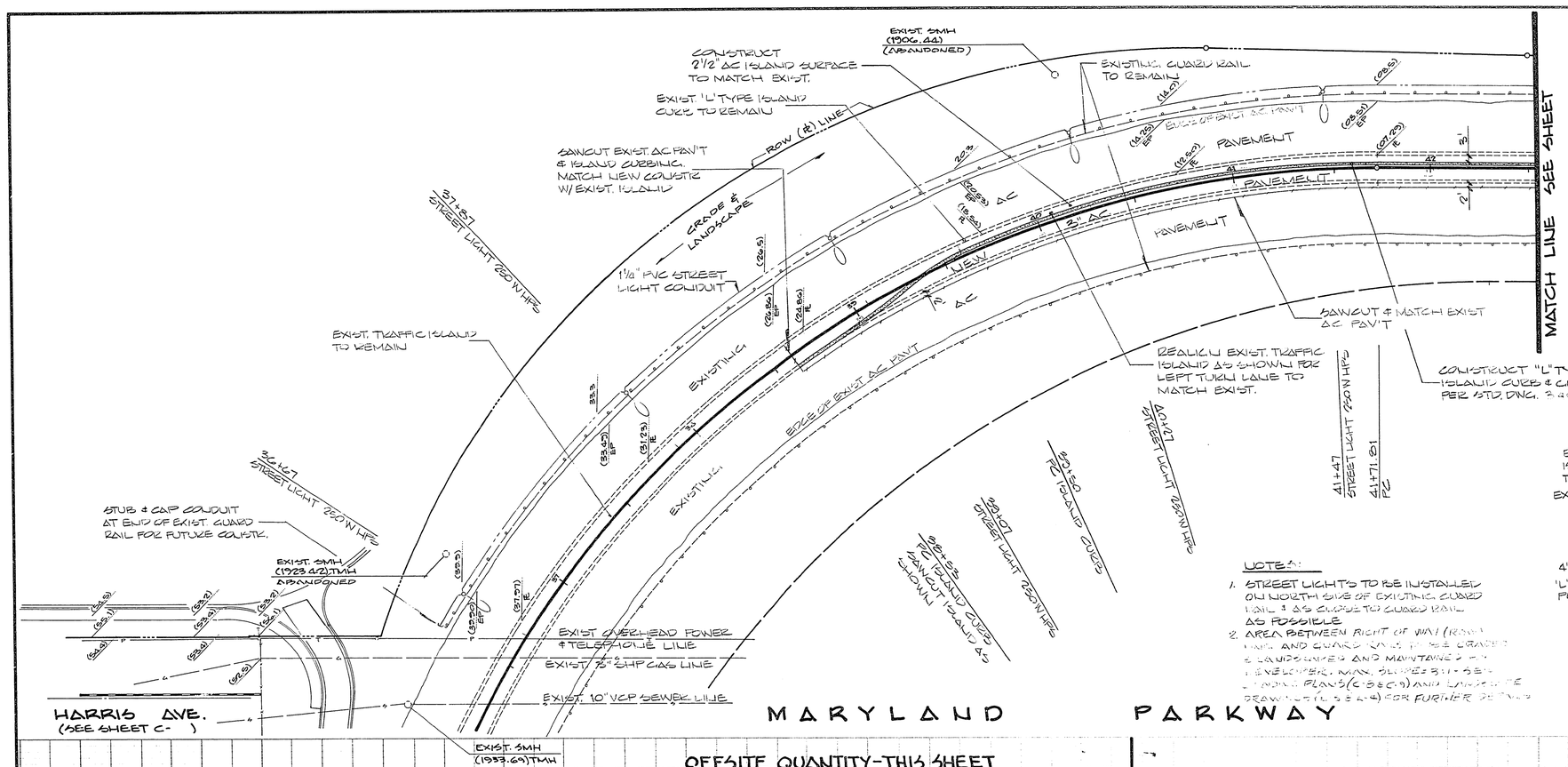

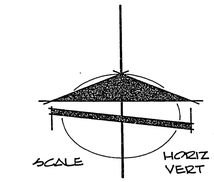

BENCH MARK

NEVADA HIGHWAY DEPT. BRASS CAP IN TOP OF CURB AT THE SW CORNER OF LAS VEGAS BLVD. NORTH & WASHINGTON AVE.
ELEVATION 1942.96
(ELEV. ESTABLISHED BY C.C. WALLACE ELKRS. DECEMBER 1980).
DATUM UNKNOWN.

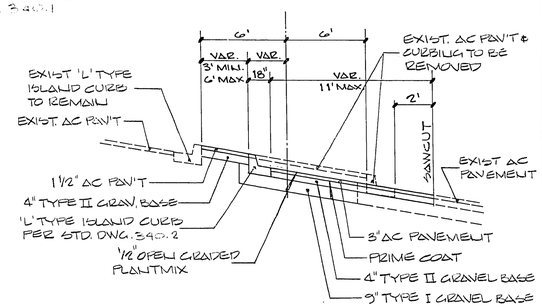

STREET SECTION
MARYLAND PARKWAY

NOTES:

1. STREET LIGHTS TO BE INSTALLED ON NORTH SIDE OF EXISTING GUARD RAIL & AS CLOSE TO GUARD RAIL AS POSSIBLE
2. AREA BETWEEN RIGHT OF WAY (ROW) LINE AND GUARD RAIL TO BE GRADED & LANDSCAPED AND MAINTAINED BY DEVELOPER. MAX. SLOPE = 3:1. SEE LANDSCAPE PLANS (L-3 & L-4) AND LANDSCAPE DRAWINGS (L-5 & L-6) FOR FURTHER DETAILS.

10-10-81

OFFSITE QUANTITY-THIS SHEET

3" AC PAVEMENT	430	SQ. YDS.
TYPE II AGGREGATE	75	CU. YDS.
TYPE I AGGREGATE	110	CU. YDS.
1 1/2" A.C. PAVEMENT	195	CU. YDS.
1/2" OPEN GRADE	430	SQ. YDS.
CONCRETE "L" TYPE ISLAND CURB	390	L.F.
REMOVE CONCRETE "L" TYPE CURB	385	L.F.
STREET LIGHTS	5	EA.
1 1/4" CONDUIT	640	L.F.

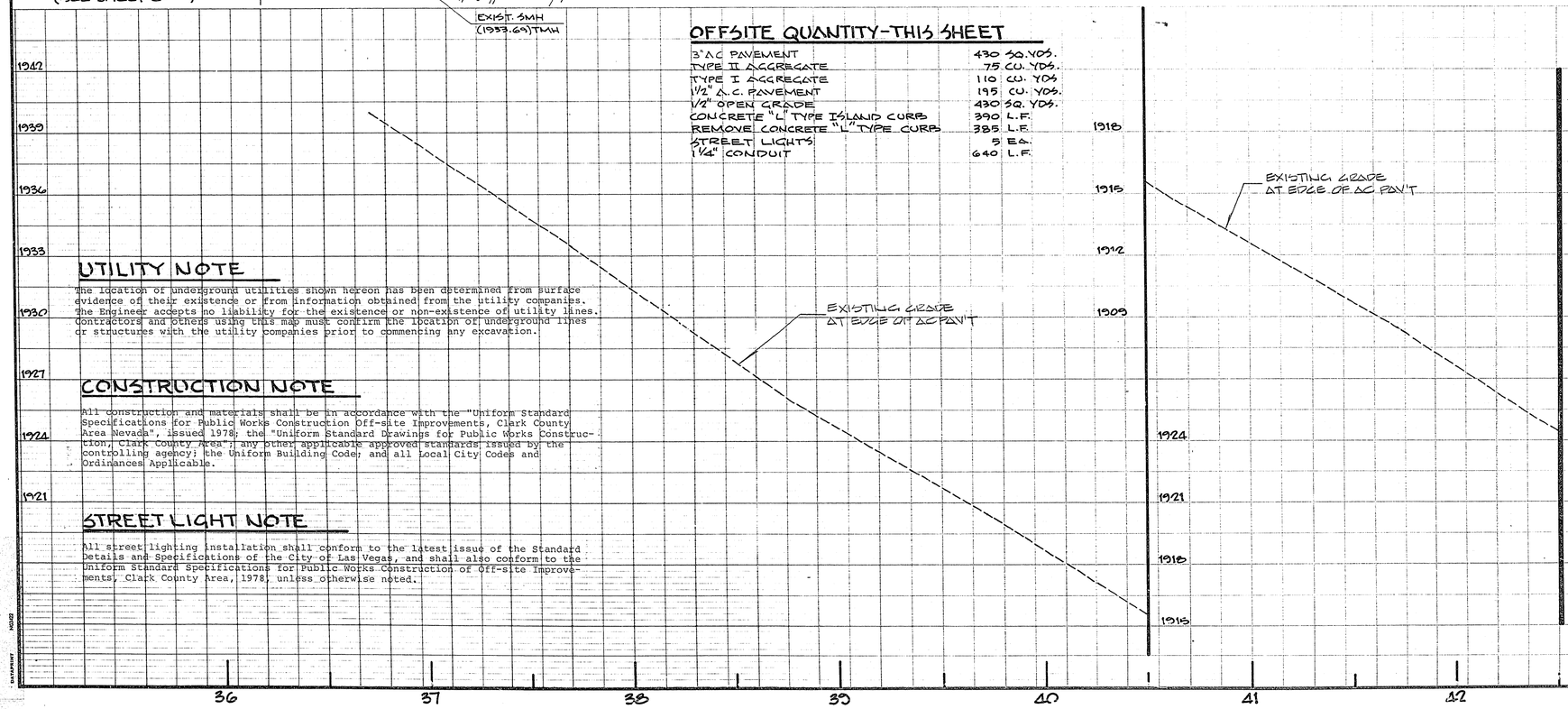

UTILITY NOTE

The location of underground utilities shown hereon has been determined from surface evidence of their existence or from information obtained from the utility companies. The Engineer accepts no liability for the existence or non-existence of utility lines. Contractors and others using this map must confirm the location of underground lines or structures with the utility companies prior to commencing any excavation.

CONSTRUCTION NOTE

All construction and materials shall be in accordance with the "Uniform Standard Specifications for Public Works Construction Off-site Improvements, Clark County Area Nevada", issued 1978; the "Uniform Standard Drawings for Public Works Construction, Clark County Area"; any other applicable approved standards issued by the controlling agency; the Uniform Building Code; and all Local City Codes and Ordinances Applicable.

STREET LIGHT NOTE

All street lighting installation shall conform to the latest issue of the Standard Details and Specifications of the City of Las Vegas, and shall also conform to the Uniform Standard Specifications for Public Works Construction of Off-site Improvements, Clark County Area, 1978, unless otherwise noted.

APPROVALS

for Richard J. Rowe — CLV TRAFFIC ENGR.	12-14-81 DATE
M. Barber — CLV FIRE MARSHAL	12-11-81 DATE
Eugene Sowa — CLV ELECTRICAL COORDINATOR	1/4/82 DATE
R.W. Beck — CLV QUALITY CONTROL ENGR.	1/5/82 DATE
for William H. Purvis — CLV ENGINEER	1/26/82 DATE
M.L. B. Gill — NEVADA POWER CO.	12-10-81 DATE
Gary Ferris — ELECTRICAL SUPERVISOR	1-4-82 DATE
Clemotephin W. Anderson	12-10-81

APPD	DATE/NO	REVISIONS

PREPARED FOR: GEORGE TATE & ASSOC.

DATE	OCT. 1981
DESIGN	CWA
DRAWN	AWM
CHECK	CWA
SCALE	H 1"=30' V 1"=3'

BAUGHMAN & TURNER
CIVIL ENGINEERS — MINING ENGINEERS — LAND SURVEYORS
2323 WEST CHARLESTON BOULEVARD — LAS VEGAS, NEVADA 89102 — 702 870-8371

STREET DESIGN
MARYLAND PARKWAY
SECTION 26, TOWNSHIP 20 SOUTH, RANGE 61 EAST, M.D.B.&M.
CITY OF LAS VEGAS
CASHMAN SPORTS & CONVENTION COMPLEX

SHEET C-1 OF C-12

PROJ. Nº

107-V1206