754

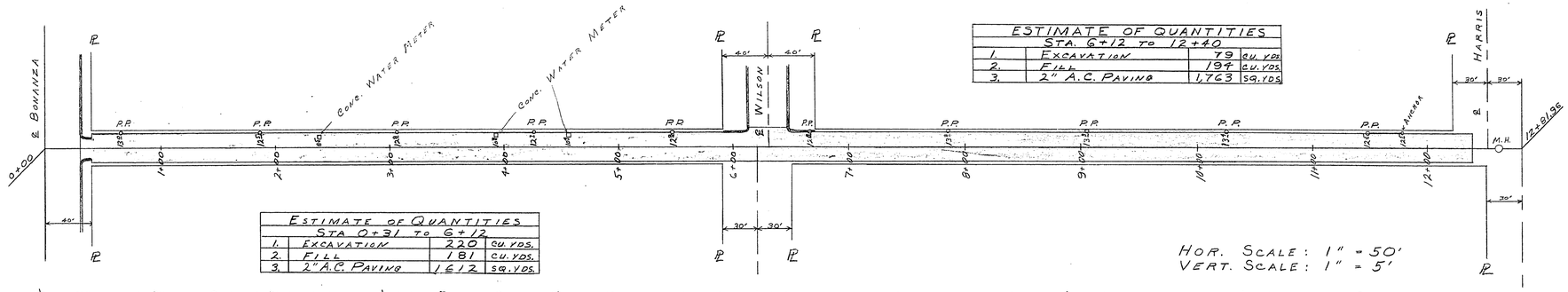

ESTIMATE OF QUANTITIES STA. 6+12 TO 12+40			
1.	EXCAVATION	79	CU. YDS.
2.	FILL	194	CU. YDS.
3.	2" A.C. PAVING	1,763	SQ. YDS.

ESTIMATE OF QUANTITIES STA 0+31 TO 6+12			
1.	EXCAVATION	220	CU. YDS.
2.	FILL	181	CU. YDS.
3.	2" A.C. PAVING	1612	SQ. YDS.

B.M. C.L.V. # 165
ELEV. 1956.605
ON POLE 60' LT OF STA 12+50

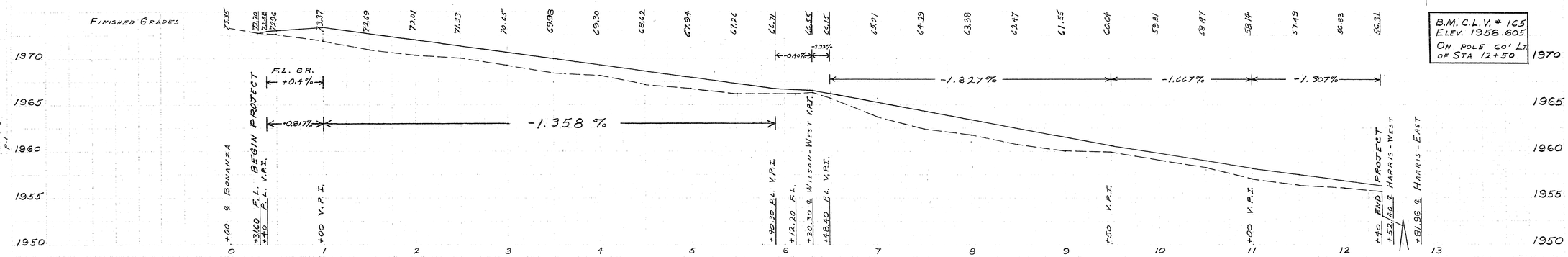

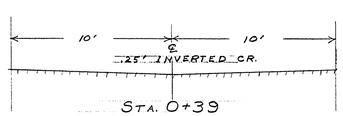

STA. 0+39

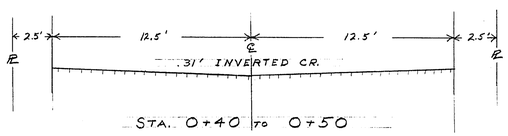

STA. 0+40 TO 0+50

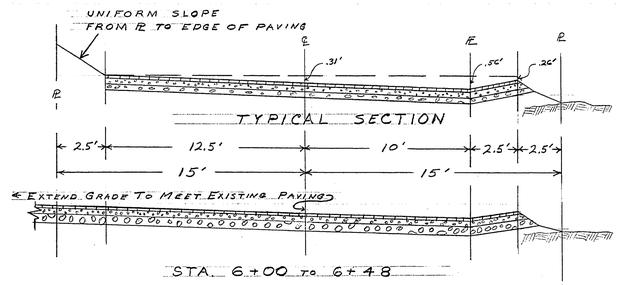

STA. 6+00 TO 6+48

NOTES

1. FLOW LINE TRANSITION FROM ℄ AT 0+50 TO TYPICAL SECTION AT 1+00.
2. COMPACT FILL TO PROPERTY LINE & SLOPE TO EXISTING ELEVATION.
3. CONSTRUCT ACCORDING TO STANDARDS FOR ALLEYS & DWG. S-11.
4. FROM STA. 6+00 TO 6+48 CONSTRUCT ACCORDING TO STANDARDS FOR STREETS & DWG. S-1.
5.

PRELIMINARY

CITY OF LAS VEGAS, NEVADA
ENGINEERING DEPT.

ALLEY: BETWEEN 11TH & 12TH FROM BONANZA TO HARRIS

		DATE	
DESIGNED BY	D. A. KENNEDY		SCALE 1"=50', 1"=5'
DRAWN BY	D. A. KENNEDY	5-14-50	FIELD BOOK NO. 56-6
CHECKED BY		4-16-50	WORK ORDER NO. 7037
APPROVED CITY ENGR.			DRAWING NO. 108-V69